AC2ON–01

INSTALLATION

Installation is in the reverse order of removal (See page AC–71).

AIR CONDITIONING AMPLIFIER

AC1FE–02

ON–VEHICLE INSPECTION

1. INSPECT A/C AMPLIFIER CIRCUIT

(a) Remove these parts:
  (1) Lower No. 2 finish panel
  (2) Lower No. 2 finish panel retainer

Wire harness side

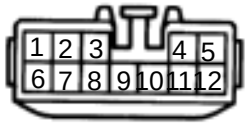

Z14427

(b) Disconnect the connector from amplifier and inspect the connector on wire harness side, as shown in the chart.
Test conditions:
- Turn ignition switch to ON
- Temperature control dial to MAX COOL
- Blower speed control switch at ”HI” position

Tester connection	Condition	Specified condition
5 – Ground	Constant	Continuity
8 – 12	Constant	Approx. 1.5 kΩ at 25 ˚C (77 ˚F)
7 – Ground	A/C switch ON	Battery positive voltage
	A/C switch OFF	No voltage
9 – Ground	A/C switch ON	Below 4.0 V
	A/C switch OFF	No voltage

If circuit is as specified, try replacing the amplifier with a new one. If the circuit is not as specified, inspect the circuits connected to other parts.

From back side

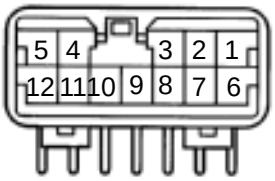

Z14428

(c) Connect the connector to amplifier and inspect the wire harness connector from the back side, as shown in the chart below.
Tester conditions:
- Running engine at idle speed
- Blower speed control switch at ”HI” position
- Temperature control dial at ”Max. COOL” position
- A/C switch ON
- Set manifold gauge set

Tester connection	Condition	Specified condition
1 – Ground	Engine speed at idle–up speed	Below 0.7 V
	Engine speed at idle speed	No voltage
2 – Ground	Refrigerant pressure 196 – 3,140 kPa	Battery positive voltage
	Refrigerant pressure less than 196 or more than 3,140 kPa	No voltage
6 – Ground	Magnetic clutch is engaged	No voltage
	Magnetic clutch is not engaged	Below 1.0 V
11 – Ground	Magnetic clutch is engaged	Below 1.0 V
	Magnetic clutch is not engaged	No voltage

If circuit is as specified, try replacing the amplifier with a new one. If the circuit is not as specified, inspect the circuits connected to other parts.

AC2OM–01

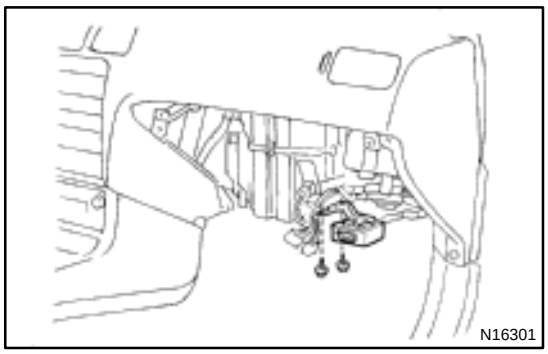

REMOVAL

1. REMOVE LOWER FINISH PANEL (See page BO–54)

2. REMOVE A/C AMPLIFIER

(a) Disconnect the connector from the amplifier.

(b) Remove the 2 screws and the amplifier.

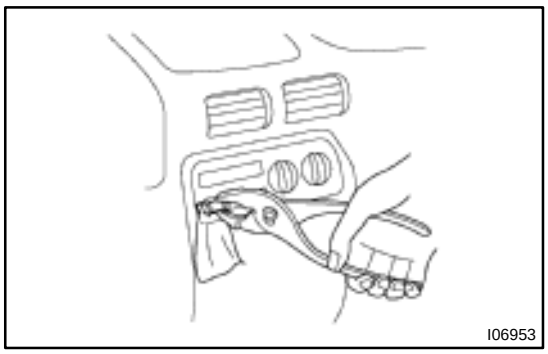

AIR CONDITIONING SWITCH

AC1FF–02

INSPECTION

1. REMOVE A/C SWITCH

(a) Cover the switch with a cloth.

(b) Using pliers, pull out the A/C switch.

(c) Disconnect the A/C switch connector.

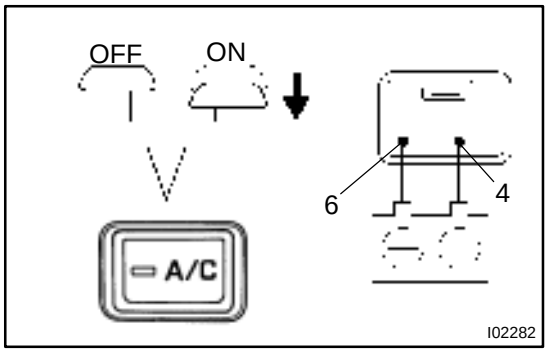

2. INSPECT A/C INDICATOR OPERATION

(a) Connect the positive (+) lead from the battery to terminal 6 and negative (–) lead to terminal 4 and check that the indicator lights up, when A/C switch ON.

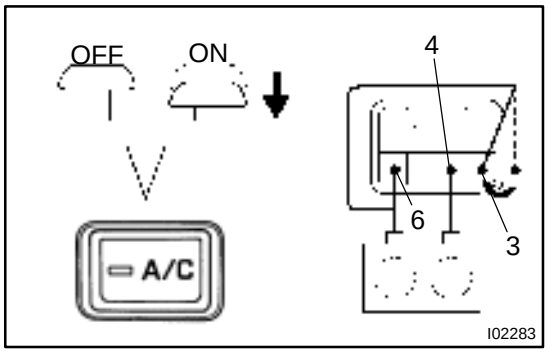

(b) Connect the positive (+) lead from the battery to terminal 3 and check that the indicator dims.

If operations are not as specified, replace the A/C switch.

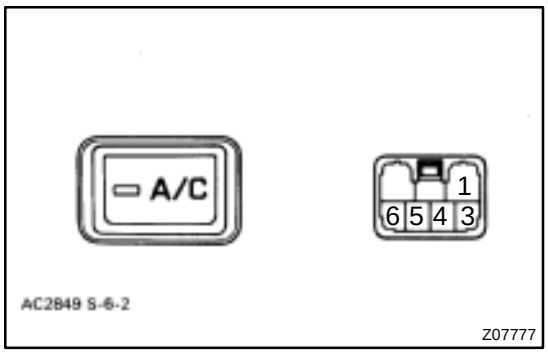

3. INSPECT A/C SWITCH CONTINUITY

Condition / Circuit	Tester connection	Specified condition
OFF	–	No continuity
ON	5 – 6	Continuity
Illumination circuit	3 – 1	Continuity

If continuity is not as specified, replace the A/C switch.

4. INSTALL A/C SWITCH

Connect the A/C switch connector, and install the A/C switch.

AC1E1–02

CHARGING

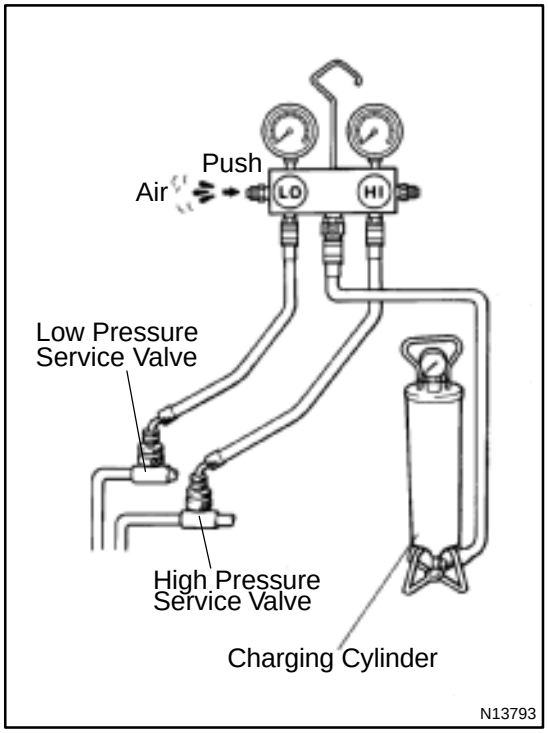

1. INSTALL CHARGING CYLINDER

HINT:

When handling the charging cylinder, always follow the directions given in the instruction manual.

(a) Charge the proper amount of refrigerant into the charging cylinder.

(b) Connect the center hose to the charging cylinder.

CAUTION:

Do not open both high and low hand valves of manifold gauge set.

(c) Open the valve of charging cylinder.

(d) Press the valve core on the side of manifold gauge and expel the air inside of the center hose.

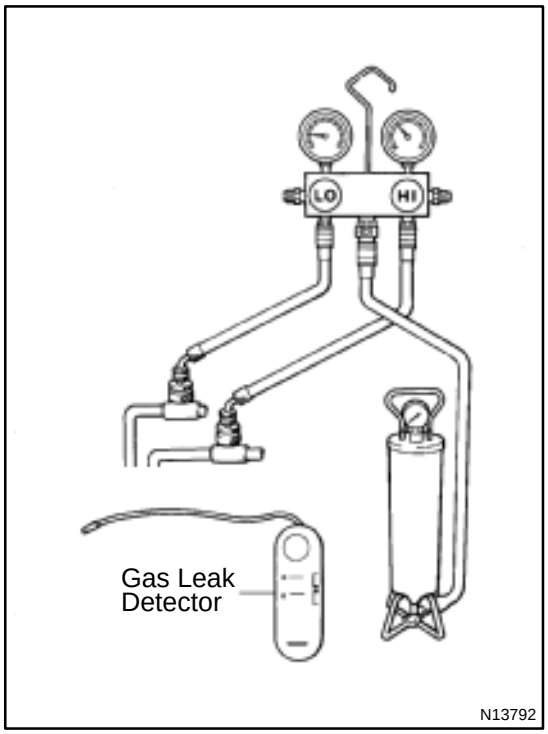

2. INSPECT REFRIGERATION SYSTEM FOR LEAKS

(a) Open the high pressure hand valve and charge refrigerant.

(b) When the low pressure gauge indicates 98 kPa (1 kgf/cm^2, 14 psi) close the high pressure hand valve.

(c) Using a gas leak detector, check the system for leakage.

If leak is found, repair the faulty component or connection.

CAUTION:

Use the refrigerant recovery/ recycling machine to recover the refrigerant whenever replacing parts.

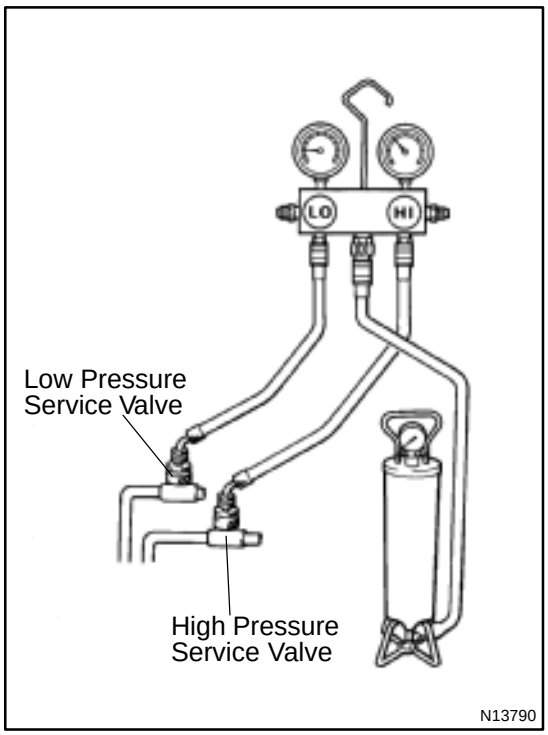

3. CHARGE REFRIGERANT INTO REFRIGERANT SYSTEM

If there is no leakafter refrigerant leak check, charge the proper amount of refrigerant intor refrigeration system.

CAUTION:

- **Never run the engine when charging the system through the high pressure side.**
- **Do not open the low pressure hand a valve when the system is being charged with liquid refrigerant.**

(a) Open the high pressure hand valve fully.

(b) Charge specified amopunt of refrigerant, then close the high pressure hand valve.

HINT:

A fully charged system is indicated by the sight flass being free of any bubbles.

4. SET OFF MANIFOLD GAUGE SET

(a) Close both hand valves of manifold gauge set.

(b) Disconnect the quick disconnect adapters from the service valves.

5. INSTALL CAPS TO SERVICE VALVES ON REFRIGERANT LINES

AC1E2–03

COMPONENTS

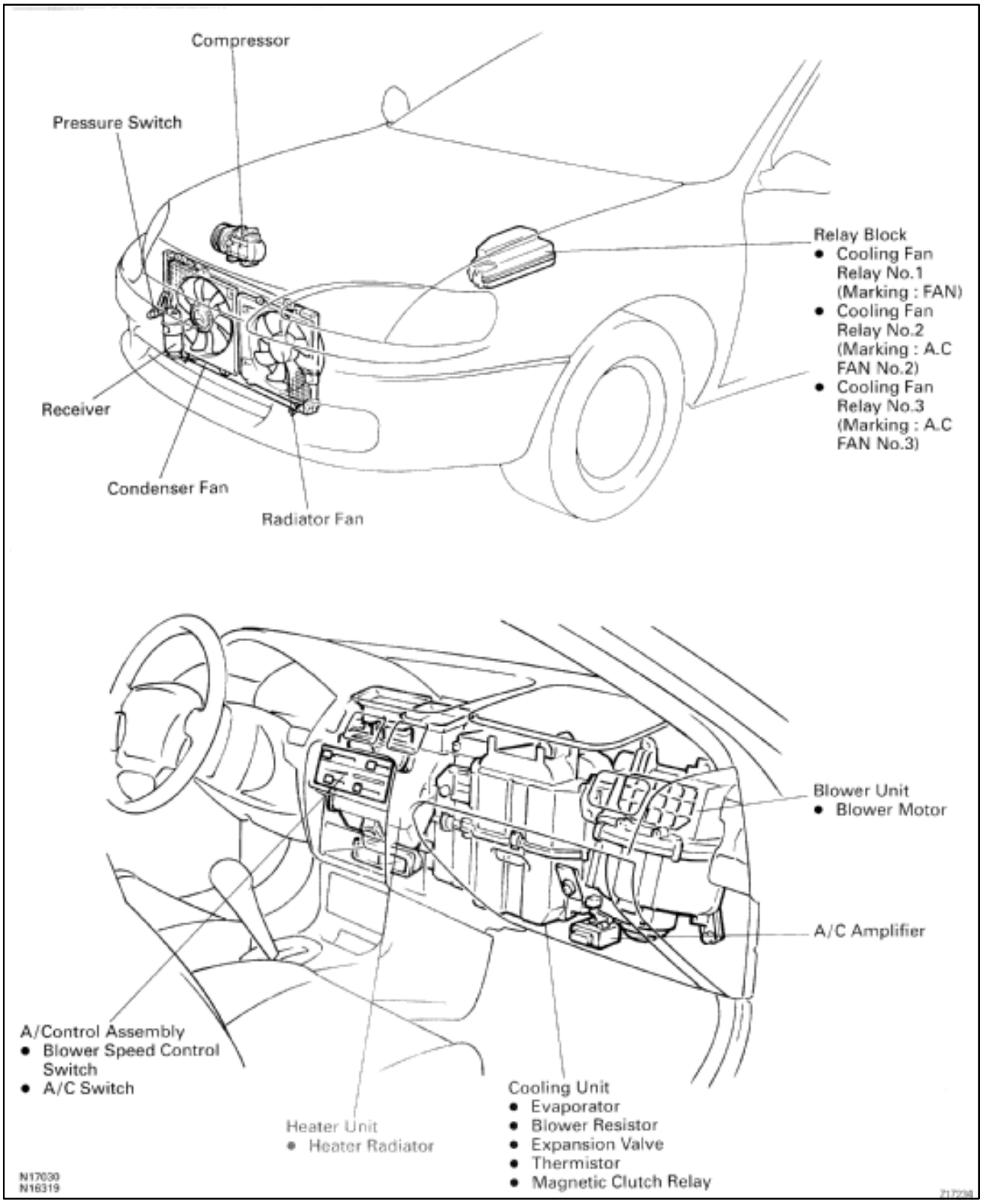

AC1E0–01

EVACUATING

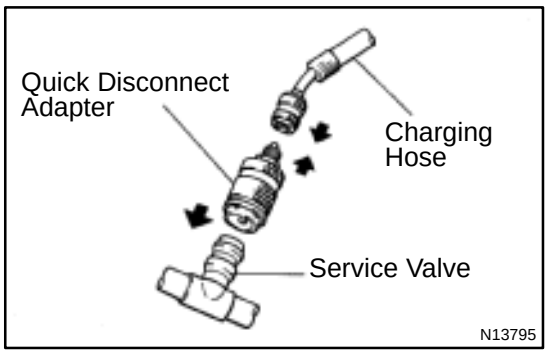

1. CONNECT QUICK DISCONNECT ADAPTER TO CHARGING HOSES

2. REMOVE CAPS FROM SERVICE VALVES ON REFRIGERANT LINES

3. SET ON MANIFOLD GAUGE SET

(a) Close both hand valves of manifold gauge set.

(b) Connect the quick disconnect adapters to the service valves.

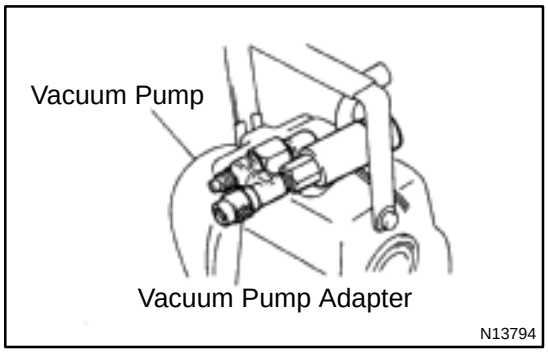

4. EVACUATE AIR FROM REFRIGERATION SYSTEM

(a) Connect the vacuum pump adapter to the vacuum pump.

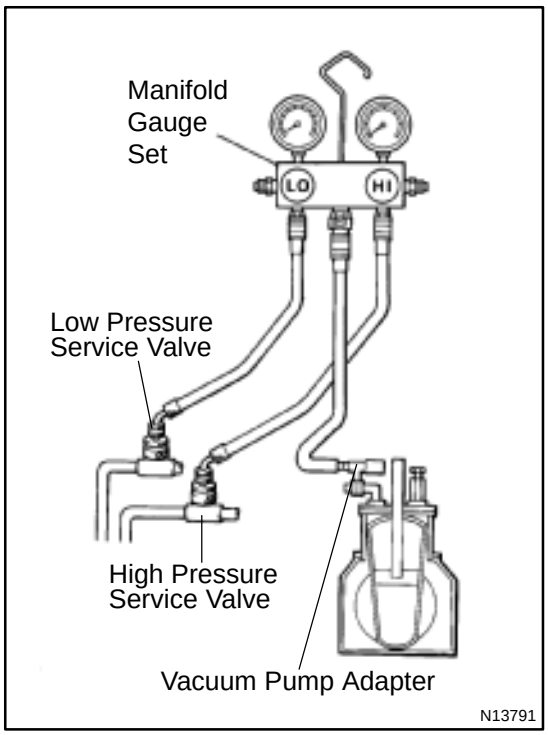

(b) Connect the center hose of the manifold gauge set to the vacuum pump adapter.

(c) Open both the high and low hand valves and run the vacuum pump.

(d) After 10 minutes or more, check that the low pressure gauge indicates 750 mmHg (30 in. Hg) or more.

HINT:

If the reading is 750 mmHg (30 in. Hg) or more, close both hand valves of manifold gauge set and stop the vacuum pump.

Check the system for leaks and repair if necessary.

(e) Close both the high and low hand valves and stop the vacuum pump.

(f) Leave the system in this condition for 5 minutes or more and check that there is no gauge indicator.

AC1DZ–03

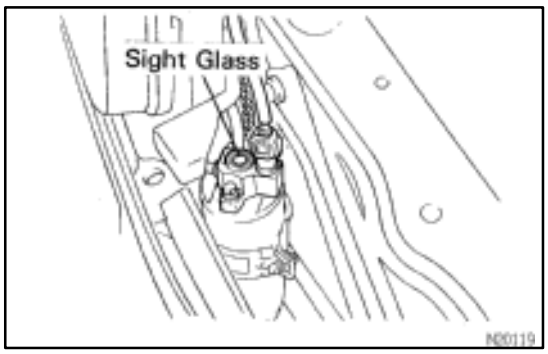

ON–VEHICLE INSPECTION

1. INSPECT REFRIGERANT VOLUME

Observe the sight glass on the liquid tube.

Test conditions:

- Running engine at 1,500 rpm
- Blower speed control switch at ”HI” position
- A/C switch ON
- Temperature control dial at ”COOL” position
- Fully open the doors

Item	Symptom	Amount of refrigerant	Remedy
1	Bubbles present in sight glass	Insufficient*	(1) Check for gas leakage with gas leak detector and repair if necessary (2) Add refrigerant until bubbles disappear
2	No bubbles present in sight glass	None, sufficient or too much	Refer item 3 and 4
3	No temperature difference between compressor inlet and outlet	Empty or nearly empty	(1) Check for gas leakage with gas leak detector and repair if necessary (2) Add refrigerant until bubbles disappear
4	Temperature between compressor inlet and outlet is noticeably different	Correct or too much	Refer to item 5 and 6
5	Immediately after air conditioning is turned off, refrigerant in sigh glass stays clear	Too much	(1) Discharge refrigerant (2) Evacuate air and charge proper amount of purified refrigerant
6	When air conditioning is turned off, refrigerant foams and then stays clear	Correct	–

*: Bubbles in the sight glass with ambient temperatures higher than usual can be considered normal if cooling is sufficient.

2. INSPECT REFRIGERANT PRESSURE WITH MANIFOLD GAUGE SET

This is a method in which the trouble is located by using a manifold gauge set. Read the manifold gauge pressure when these conditions are established.

Test conditions:

- Temperature at the air inlet with the switch set at RECURC is 30 – 35 ˚C (86 – 95 ˚F)
- Engine running at 1500 rpm
- Blower speed control switch at ”HI” position
- Temperature control dial on ”COOL” position

HINT:

It should be noted that the gauge indications may vary slightly due to ambient temperature conditions.

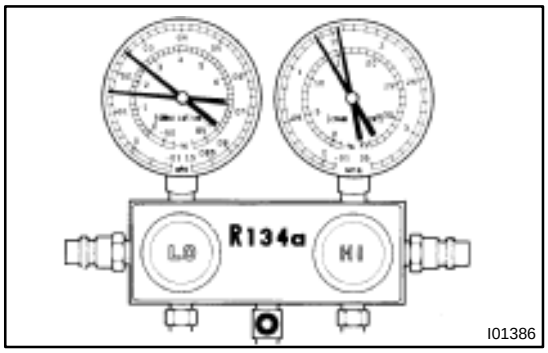

(1) Normally functioning refrigeration system.

Gauge reading:

Low pressure side:

0.15 – 0.25 MPa (1.5 – 2.5 kgf/cm^2)

High pressure side:

1.37 – 1.57 MPa (14 – 16 kgf/cm$^{2)}$

(2) Moisture present in refrigeration system.

Condition: Periodically cools and then fails to cool

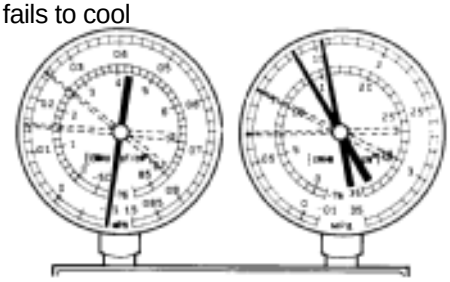

I01387

Symptom seen in refrigeration system	Probable cause	Diagnosis	Remedy
During operation, pressure on low pressure side sometimes become a vacuum and sometime normal	Moisture entered in refrigeration system freezes at expansion valve orifice and temporarily stops cycle, but normal state is restored after a time when the ice melts	• Drier in oversaturated state • Moisture in refrigeration system freezes at expansion valve orifice and blocks circulation of refrigerant	(1) Replace condenser (2) Remove moisture in cycle through repeatedly evacuating air (3) Charge proper amount of new refrigerant

(3) Insufficient cooling

Condition: Insufficient cooling

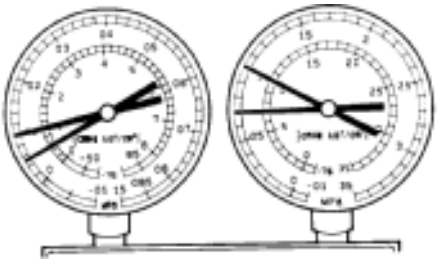

I01388

Symptom seen in refrigeration system	Probable cause	Diagnosis	Remedy
• Pressure low on both low and high pressure sides • Bubbles seen in sight glass continuously • Insufficient cooling performance	Gas leakage at some place in refrigeration system	• Insufficient refrigerant in system • Refrigerant leaking	(1) Check for gas leakage with gas leak detector and repair if necessary (2) Charge Proper amount of refrigerant (3) If indicated pressure value is near 0 when connected to gauge, create the vacuum after inspecting and repairing the location of the leak

(4) Poor circulation of refrigerant

Condition: Insufficient cooling

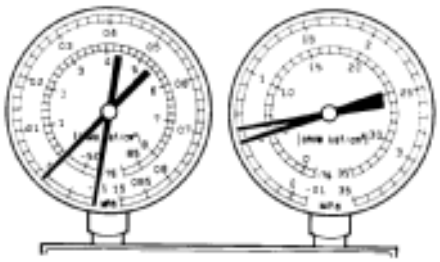

I01389

Symptom seen in refrigeration system	Probable cause	Diagnosis	Remedy
• Pressure low in both low and high pressure sides • Frost on tube from condenser to unit	Refrigerant flow obstructed by dirt in condenser	Condenser clogged	Replace condenser

(5) Refrigerant does not circulate

Condition: Does not cool (Cools from time to time in some cases)

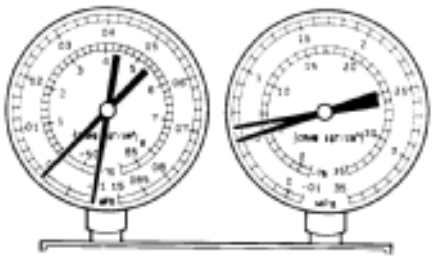

I01449

Symptom seen in refrigeration system	Probable cause	Diagnosis	Remedy
• Vacuum indicated on low pressure side, very low pressure indicated on high pressure side • Frost or dew seen on piping before and after receiver/ drier or expansion valve	• Refrigerant flow obstructed by moisture or dirt in refrigeration system • Refrigerant flow obstructed by gas leakage from expansion valve	Refrigerant does not circulate	(1) Check expansion valve (2) Clean out dirt in expansion valve by blowing with air (3) Replace condenser (4) Evacuate air and charge new refrigerant to proper amount (5) For gas leakage from expansion valve, replace expansion valve

(6) Refrigerant overcharged or insufficient cooling of condenser

Condition: Insufficient cooling

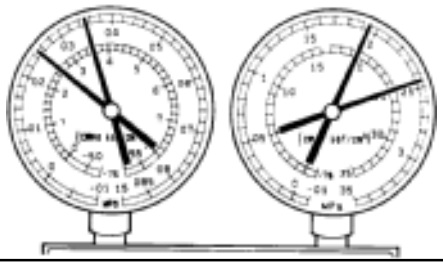

I01390

Symptom seen in refrigeration system	Probable cause	Diagnosis	Remedy
• Pressure too high on both low and high pressure sides • No air bubbles seen through the sight glass even when the engine rpm is lowered	• Unable to develop sufficient performance due to excessive refrigerant in system • Insufficient cooling of condenser	• Excessive refrigerant in cycle → refrigerant overcharged • Condenser cooling → condenser fins clogged of condenser fan faulty.	(1) Clean condenser (2) Check condenser fan motor operation (3) If (1) and (2) are in normal state, check amount of refrigerant Charge proper amount of refrigerant

(7) Air present in refrigeration system

Condition: Insufficient cooling

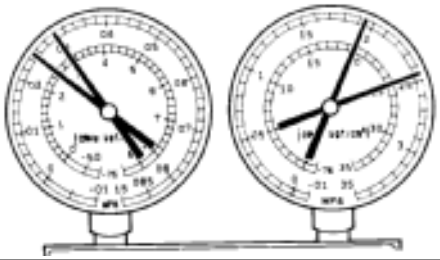

NOTE : These gauge indications are shown when the refrigeration system has been opened and the refrigerant charged without vacuum purging.

I01392

Symptom seen in refrigeration system	Probable cause	Diagnosis	Remedy
• Pressure too high on both low and high pressure sides • The low pressure piping hot to the touch • Bubbles seen in sight glass	Air entered in refrigeration system	• AIr present in refrigeration system • Insufficient vacuum purging	(1) Check compressor oil to see if it is dirty or insufficient (2) Evacuate air and charge new refrigerant

(8) Expansion valve improperly

Condition: Insufficient cooling

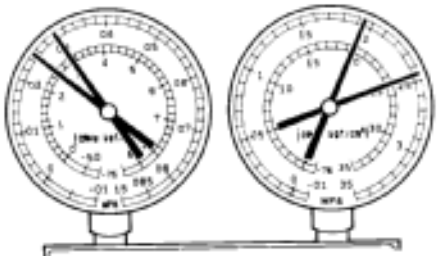

I01450

Symptom seen in refrigeration system	Probable cause	Diagnosis	Remedy
• Pressure too high on both low and high pressure sides • Frost or large amount of dew on piping on low pressure side	Trouble in expansion valve	• Excessive refrigerant in low pressure piping • Expansion valve opened too wide	Check expansion valve Replace if defective

(9) Defective compression compressor

Condition : Does not cool

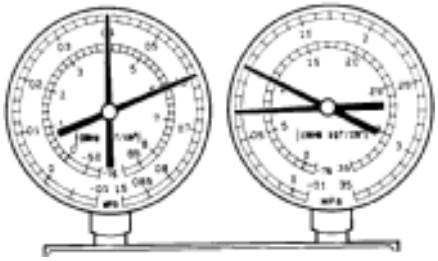

I01393

Symptom seen in refrigeration system	Probable cause	Diagnosis	Remedy
• Pressure too high on low and high pressure sides • Pressure too low on high pressure side	Internal leak in compressor	• Compression defective • Valve leaking or broken sliding parts	Repair or replace compressor

3. INSPECT IDLE–UP SPEED

(a) Warm up engine.

(b) Inspect idle–up speed when the these conditions are established.

Test conditions:

- Blower speed control switch at ”HI” position
- Temperature control dial at ”COOL” position
- A/C switch ON
- Put gear shift in neutral

Magnetic clutch condition	Idle–up speed
Not engaged	Approx. 700 rpm
Engaged	Approx. 1,500 rpm

If idle speed is not as specified, check the IAC valve and air intake system.

4. INSPECT FOR LEAKAGE OF REFRIGERANT

(a) Perform in these conditions:

- Stop engine.
- Secure good ventilation (If the gas leak detector may not react to volatile gases which are not refrigerant, such as evaporated gasoline and exhaust gas.)
- Repeat the test 2 or 3 times.
- Make sure that there is some refrigerant remaining in the refrigeration system.
  When compressor is OFF: approx. 392 – 588 kPa (4 – 6 kgf/ cm^2, 57 – 85 psi)

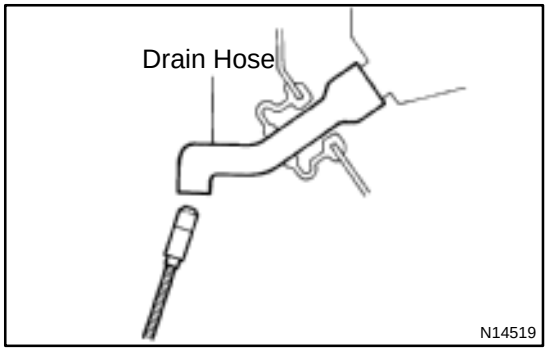

(b) Bring the gas leak detector close to the drain hose before performing the test.

HINT:

- After the blower motor has stopped, leave the cooling unit for more than 15 minutes.
- Expose the gas leak detector sensor under the drain hose.
- When bring the gas leak detector close to the drain hose, make sure that the gas leak detector does not react to the volatile gases.

If such reaction is unavoidable, the vehicle must be lifted up.

(c) If gas leak is not detected on the drain hose, remove the blower resistor from the cooling unit. Then insert the gas leak detector sensor into the unit and perform the test.

(d) Disconnect the connector and leave the pressure switch for approx. 20 minutes. Then bring the gas leak detector close to the pressure switch and perform the test.

(e) Bring the gas leak detector close to the refrigerant lines and perform the test.

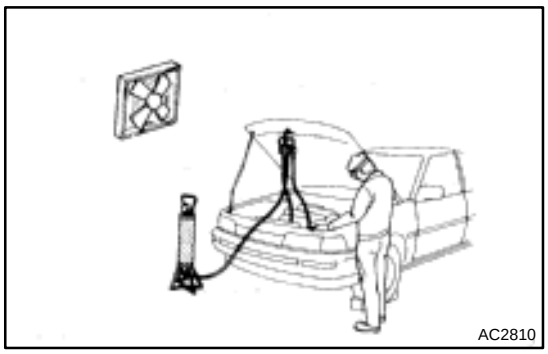
AC2810

AIR CONDITIONING SYSTEM

AC1DY–01

PRECAUTION

1. DO NOT HANDLE REFRIGERANT IN AN ENCLOSED AREA OR WEAR EYE PROTECTION

2. ALWAYS WEAR EYE PROTECTION

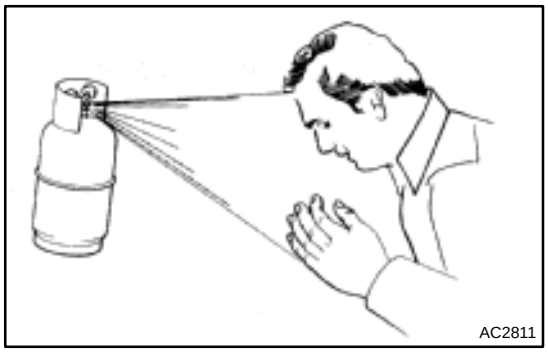
AC2811

3. BE CAREFUL NOT TO GET LIQUID REFRIGERANT IN YOUR EYES OR ON YOUR SKIN

If liquid refrigerant gets in your eyes or on your skin.

(a) Wash the area with lots of cool water.

CAUTION:

Do not rub your eyes or skin.

(b) Apply clean petroleum jelly to the skin.

(c) Go immediately to a physician or hospital for professional treatment.

4. NEVER HEAT CONTAINER OR EXPOSE IT TO NAKED FLAME

5. BE CAREFUL NOT TO DROP CONTAINER AND NOT TO APPLY PHYSICAL SHOCKS TO IT

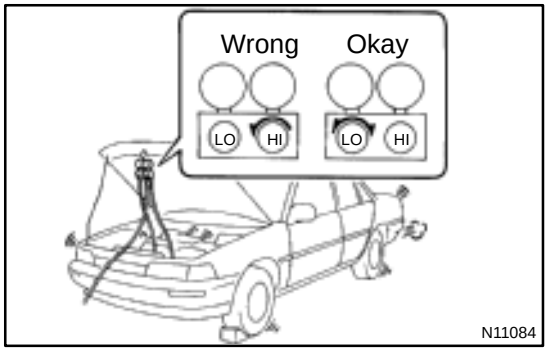

N11084

6. DO NOT OPERATE COMPRESSOR WITHOUT ENOUGH REFRIGERANT IN REFRIGERATION SYSTEM

If there is not enough refrigerant in the refrigerant system oil lubrication will be insufficient and compressor burnout may occur, so that care to avoid this, necessary care should be taken.

7. DO NOT OPEN PRESSURE MANIFOLD VALVE WHILE COMPRESSOR IS OPERATE

If the high pressure valve is opened, refrigerant flows in the reverse direction and could cause the charging cylinder to rupture, so open and close the only low pressure valve.

8. BE CAREFUL NOT TO OVERCHARGE SYSTEM WITH REFRIGERANT

If refrigerant is overcharged, it causes problems such as insufficient cooling, poor fuel economy, engine overheating etc.

9. SUPPLEMENTAL RESTRAINT SYSTEM (SRS)

The PASEO is equipped with as SRS (Supplemental Restraint System) such as the driver and passenger airbag. Failure to carry out service operations the correct sequence could cause the SRS to unexpectedly deployed during servicing, possibly leading to a serious accident. Further, if a mistake is mode in serving the SRS, it is possible the SRS may fail to operate when required. Before servicing (including removal or installation of parts, inspection or replacement), be sure to read the following item carefully, then follow the correct procedure described in repair manual.

BLOWER MOTOR

AC1F2–02

INSPECTION

1. REMOVE LOWER FINISH PANEL
(See page BO–54)

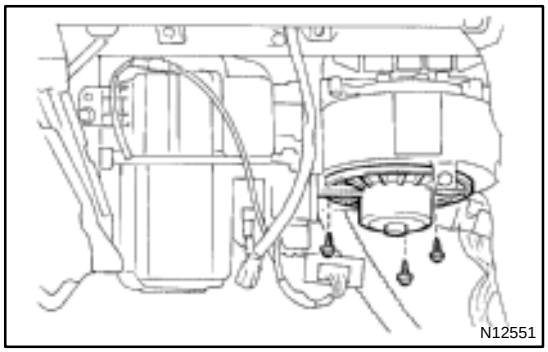

2. REMOVE BLOWER MOTOR
(a) Remove the A/C amplifier.
(b) Disconnect the connector.
(c) Remove the 3 screws and motor.

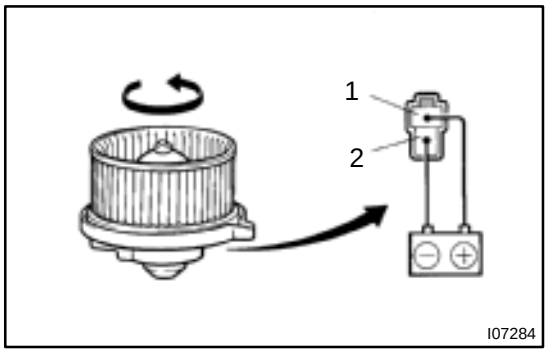

3. INSPECT BLOWER MOTOR OPERATION
Connect the positive (+) lead from the battery to terminal 1 and the negative (–) lead to terminal 2, then check that the motor operations smothly.
If operation is not as specified, replace the blower motor.

4. INSTALL BLOWER MOTOR
(a) Install the motor and 3 screws.
(b) Connect the connector.
(c) Install the A/C amplifier.

5. INSTALL LOWER FINISH PANEL
(See page BO–58)

BLOWER RESISTOR

AC1F3–02

INSPECTION

1. REMOVE LOWER FINISH PANEL
(See page BO–54)

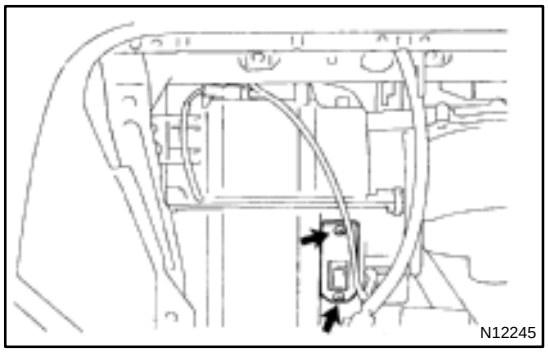

2. REMOVE BLOWER RESISTOR

(a) Disconnect the connector.
(b) Remove the 2 screws and blower resistor.

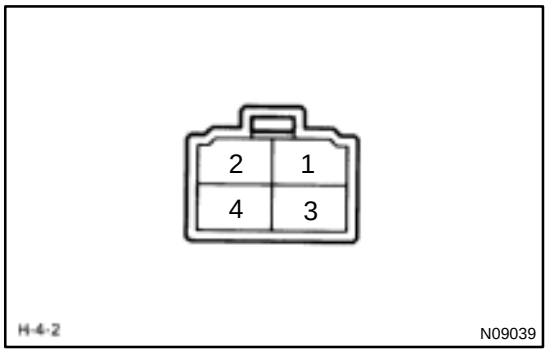

3. INSPECT BLOWER RESISTOR RESISTANCE

Tester connection	Condition	Specified condition
1 – 3	Constant	Approx. 0.4 Ω
2 – 3	Constant	Approx. 1.1 Ω
2 – 4	Constant	Approx. 2.8 Ω

If continuity is not as specified, replace the blower resistor.

4. INSTALL BLOWER MOTOR

(a) Install the blower resistor with screw.
(b) Connect the connector.

5. INSTALL LOWER FINISH PANEL
(See page BO–58)

BLOWER UNIT

COMPONENTS

AC1EO–01

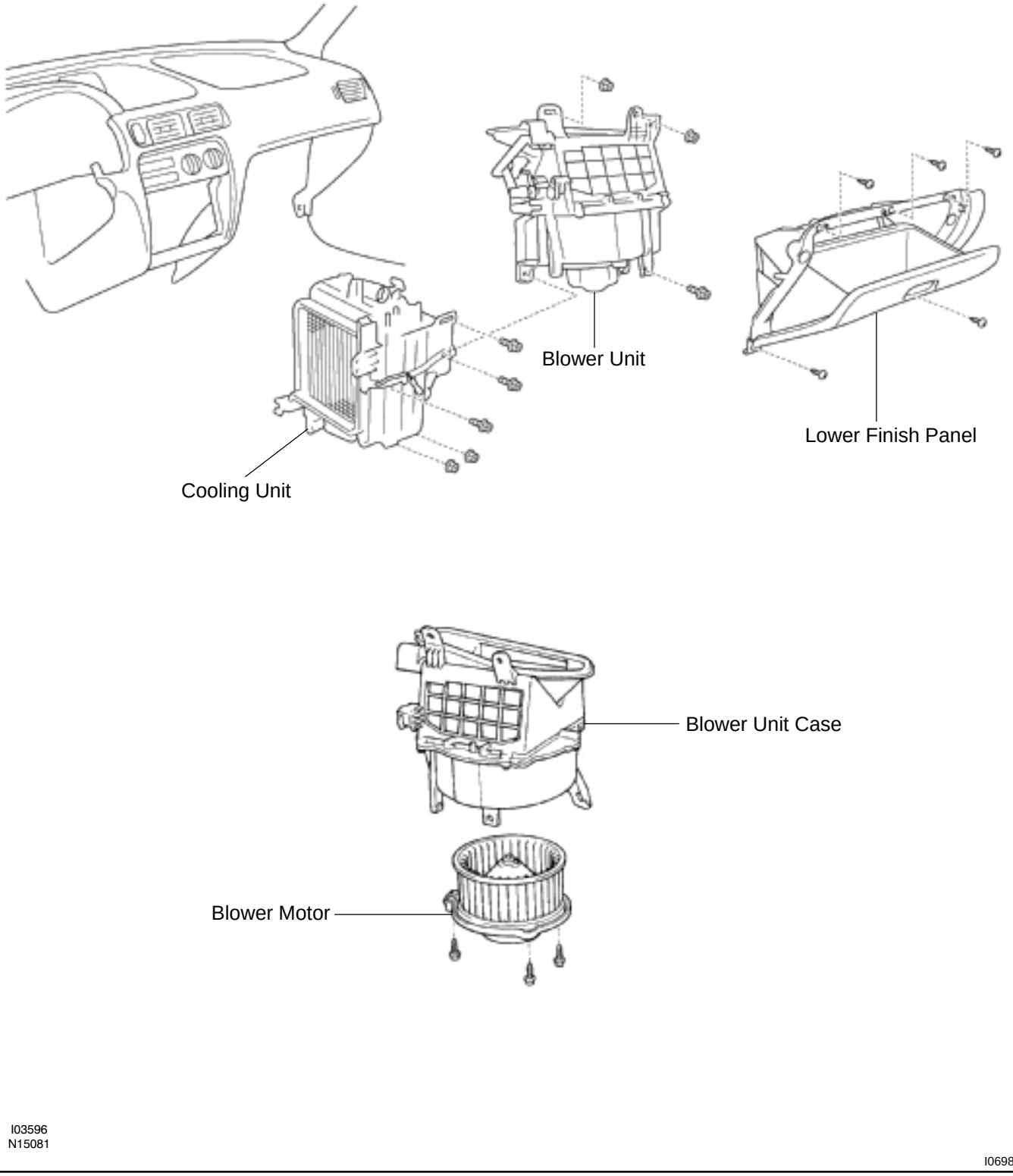

AC1EQ–01

DISASSEMBLY

REMOVE BLOWER MOTOR

Remove the 3 screws and blower motor.

AC1ES–01

INSTALLATION

Installation is in the reverse order of removal (See page AC–38).

AC1ER–01

REASSEMBLY

Reassembly is in the reverse order of disassembly (See page AC–39).

AC1EP–02

REMOVAL

1. REMOVE COOLING UNIT
(See page AC–26)

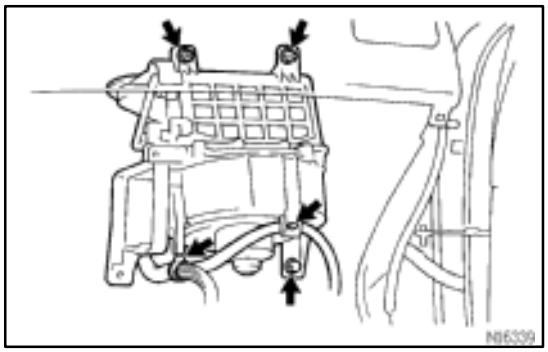

2. REMOVE BLOWER UNIT

(a) Disconnect the connector from the blower motor.

(b) Disconnect the air inlet damper control cable.

HINT:

At the time of installation, please refer to the following item.

For installing the control cable, refer to ”INSTALLATION” of HEATER CONTROL ASSEMBLY on page AC–81.

(c) Disconnect the wire harness clamps from blower unit.

HINT:

At the time of installation, please refer to the following item.

Do not reuse the 2 nuts.

(d) Remove the 2 nut, bolt and the blower unit.

AC1EU–02

COMPONENTS

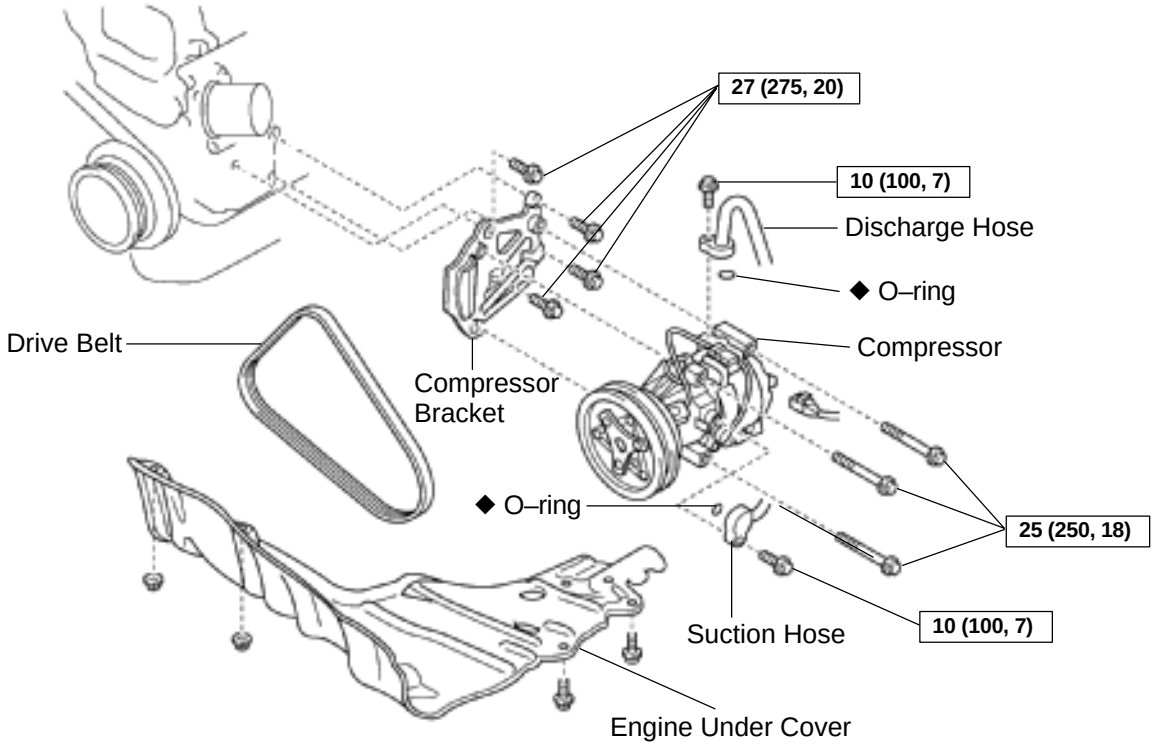

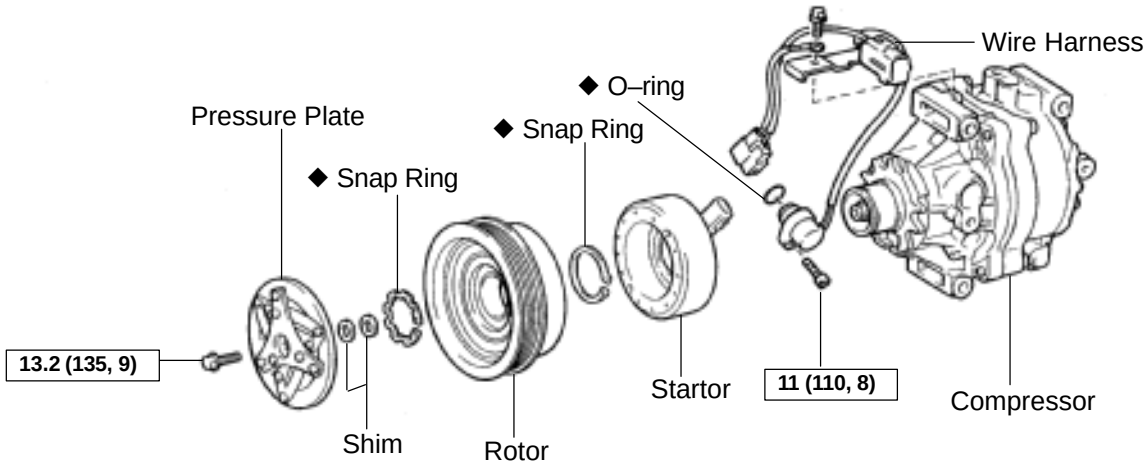

I06976
N20122

N·m (kgf·cm, ft·lbf) : Specified torque
◆ Non–reusable part

I03590

AC1EW–01

DISASSEMBLY

1. REMOVE PRESSURE PLATE

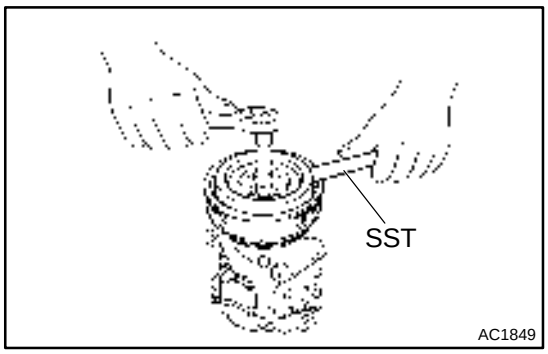

(a) Using SST and a socket wrench, remove the shaft bot.
SST 07112–76050
Torque: 13.2 N·m (135 kgf·cm, 9 ft·lbf)

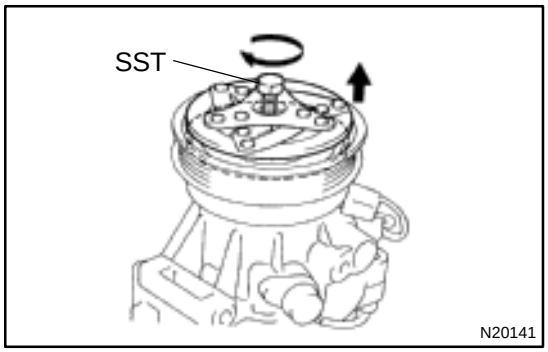

(b) Install SST to the pressure plate.
SST 07112–66040

(c) Using SST and a socket wrench, remove the pressure plate.
SST 07112–76050, 07112–66040

(d) Remove the shims from the shaft.

2. REMOVE ROTOR

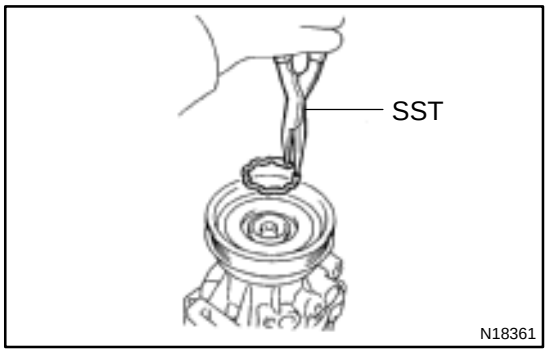

(a) Using SST, remove the snap ring.
SST 07114–84020

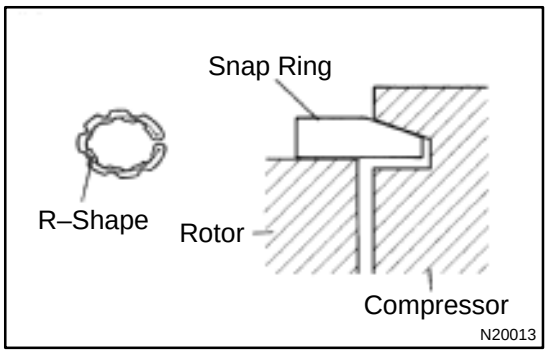

NOTICE:
At the time of reassembly, please refer to the following item.
The snap ring should be installed so that its beveled side faces up.

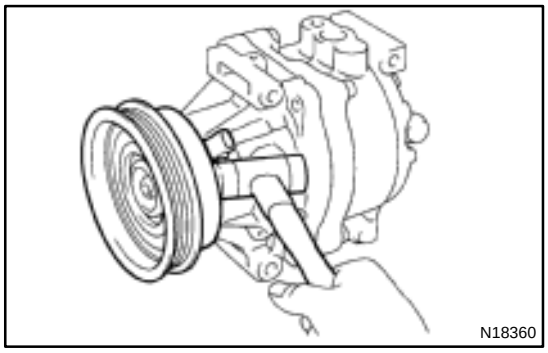

(b) Using a plastic hammer, tap the rotor off the shaft.

NOTICE:
Be careful not to damage the pulley when tapping on the rotor.

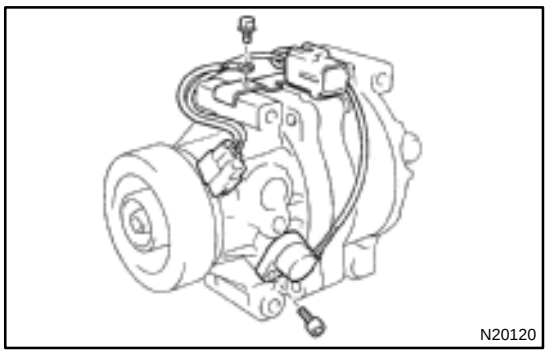
N20120

3. REMOVE STATOR

(a) Disconnect the connector from the stator.

(b) Using SST, remove the bolt from compressor lock sensor.
SST 07110–61050
Torque: 11 N·m (110 kgf·cm, 8 ft·lbf)

(c) Remove the screw and stator lead wire with the sensor.

HINT:

At the time of reassembly, prease refer to the following item.
Lubricate a new O–ring with compressor oil and install them to the sensor.

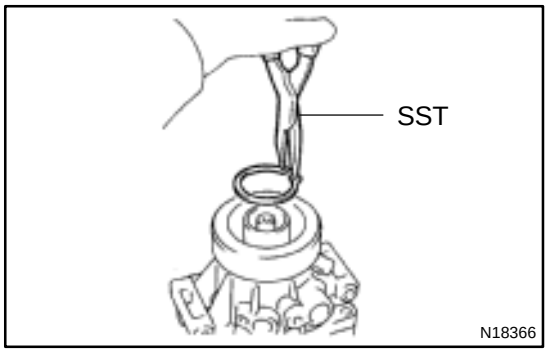

N18366

(d) Using SST, remove the snap ring.
SST 07114–84020

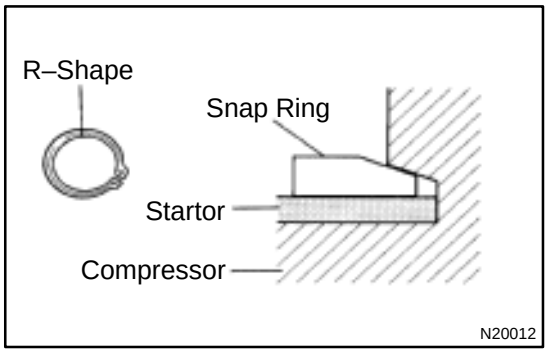

N20012

NOTICE:
At the time of reassembly, please refer to the following item.
The snap ring should be installed so that its beveled side faces up.

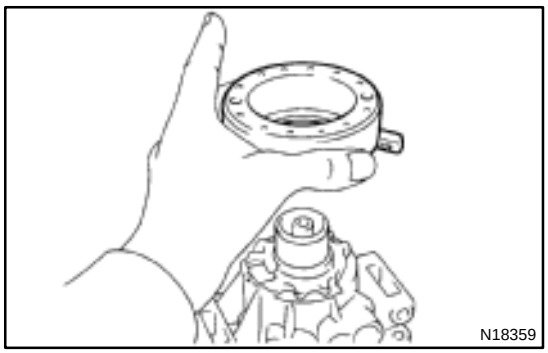
N18359

(e) Remove the stator.

AC1EY–02

INSTALLATION

1. INSTALL COMPRESSOR

(a) Install the compressor with 3 bolts.
Torque: 25 N·m (250 kgf·cm, 18 ft·lbf)

(b) Connect the connector.

2. CONNECT DISCHARGE AND SUCTION HOSES
Torque: 10 N·m (100 kgf·cm, 7 ft·lbf)

NOTICE:

Hose should be connected immediately after the caps have been removed.

HINT:

Lubricate 2 new O–rings with compressor oil and install the tubes.

3. INSTALL AND CHECK DRIVE BELT (See page AC–16)

4. INSTALL ENGINE UNDER COVER

5. CONNECT NEGATIVE (–) TERMINAL CABLE TO BATTERY

6. EVACUATE AIR FROM REGISTRATION SYSTEM AND CHARGE SYSTEM WITH REFRIGERANT
Specified amount: 600 ± 50 g (21.16 ± 1.76 oz.)

7. INSPECT FOR LEAKAGE OF REFRIGERANT

Using a gas leak detector, check for leakage of refrigerant.

If there is leakage, check the tightening torque at the joints.

8. INSPECT A/C OPERATION

COMPRESSOR AND MAGNETIC CLUTCH

AC1ET–02

ON–VEHICLE INSPECTION

1. INSPECT COMPRESSOR FOR METALLIC SOUND

Check there is abnormal metallic sound from the compressor when the A/C switch is ON.

If abnormal metallic sound is heard, replace the compressor assembly.

2. INSPECT REFRIGERANT PRESSURE

(See page AC–3)

3. INSPECT VISUALLY FOR LEAKAGE OF REFRIGERANT

Using a gas leak detector, check for leakage of refrigerant.

If there is any leakage, replace the compressor assembly.

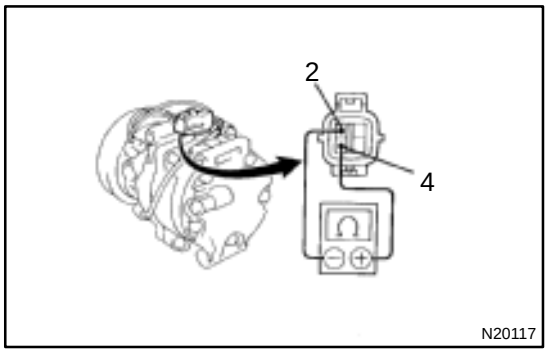

4. INSPECT COMPRESSOR LOCK SENSOR RESISTANCE

(a) Disconnect the connector.

(b) Measure resistance between terminals 2 and 4.

Standard resistance:

240 ± 80 Ω at 20 ˚C (68 ˚F)

If resistance is not as specified, replace the sensor.

5. MAKE THESE VISUAL CHECKS:

(a) Leakage of grease from the clutch bearing

(b) Signs of oil on the pressure plate or rotor.

(c) Repair or replace, as necessary.

6. INSPECT MAGNETIC CLUTCH BEARING FOR NOISE

(a) Start engine.

(b) Check for abnormal noise from the compressor when the A/C switch is OFF.

If abnormal noise is being emitted, replace the magnetic clutch.

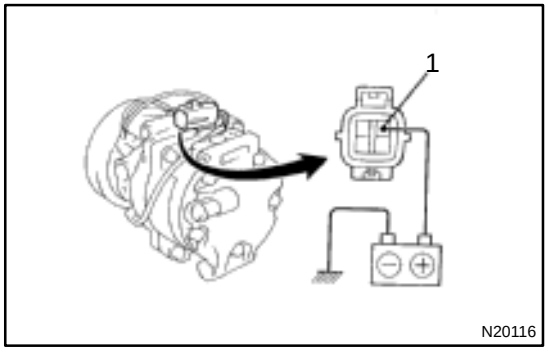

7. INSPECT MAGNETIC CLUTCH OPERATION

(a) Disconnect the connector.

(b) Connect the positive (+) lead from the battery to terminal 1 and the negative (–) lead to the body ground.

(c) Check that the magnetic clutch energized.

If operation is not as specified, replace the magnetic clutch.

AC1EX–01

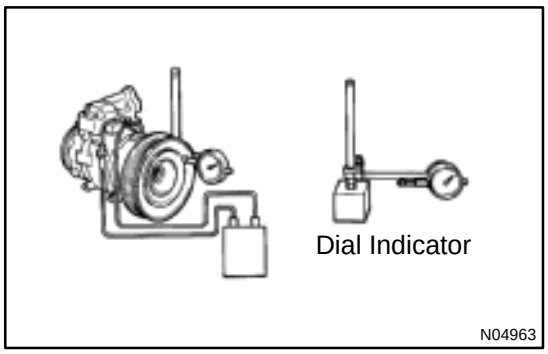

REASSEMBLY

Reassembly is in the reverse order of disassembly (See page AC–45).

AFTER REASSEMBLY, CHECK CLEARANCE OF MAGNETIC CLUTCH

(a) Set the dial indicator to the pressure plate of the magnetic clutch.

(b) Connect the magnetic clutch lead wire to the positive (+) terminal of the battery.

(c) Check the clearance between the pressure plate and rotor when connecting the negative (–) terminal to the battery.

Standard clearance:
0.5 ± 0.15 mm (0.020 ± 0.0059 in.)

If the clearance is not within the standard clearance, adjust the clearance using shims to obtain the standard clearance.

Shim thickness:
0.1 mm (0.004 in.)
0.3 mm (0.012 in.)
0.5 mm (0.020 in.)

AC1EV–01

REMOVAL

1. RUN ENGINE AT IDLE SPEED WITH A/C ON FOR APPROX. 10 MINUTES

2. STOP THE ENGINE

3. DISCONNECT NEGATIVE (–) TERMINAL CABLE FROM BATTERY

4. DISCHARGE REFRIGERANT FROM REFRIGERATION SYSTEM

5. REMOVE ENGINE UNDER COVER

6. DISCONNECT DISCHARGE HOSE AND SUCTION HOSE FROM COMPRESSOR

Remove the 2 bolts and disconnect the both hoses.

NOTICE:

Cap the open fittings immediately to keep moisture or dirt out of the system.

7. REMOVE DRIVE BELT

(See page AC–17)

8. REMOVE COMPRESSOR

(a) Disconnect the connector.

(b) Remove the 3 bolts and compressor.

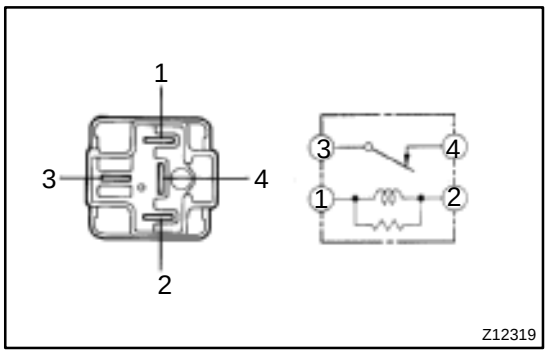

COOLING FAN RELAY INSPECTION

AC2OL–01

1. REMOVE COOLING FAN RELAY No.1, No.2 AND No.3

2. INSPECT COOLING FAN RELAY No. 1 (Marking: FAN) CONTINUITY

Condition	Tester connection	Specified condition
Constant	1 – 2 3 – 4	Continuity
Apply B+ between terminals 1 and 2.	3 – 4	No continuity

If continuity is not as specified, replace the relay.

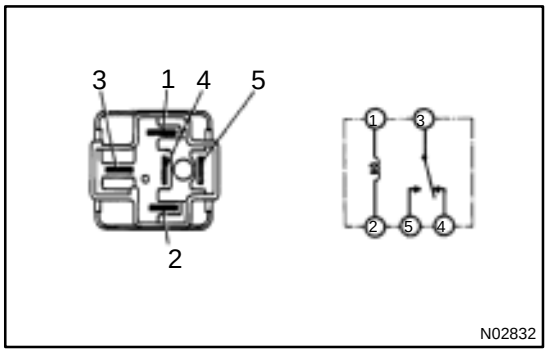

3. INSPECT COOLING FAN RELAY No. 2 (Marking: A.C FAN No. 2) CONTINUITY

Condition	Tester connection	Specified condition
Constant	1 – 2 3 – 4	Continuity
Apply B+ between terminals 1 and 2.	3 – 5	Continuity

If continuity is not as specified, replace the relay.

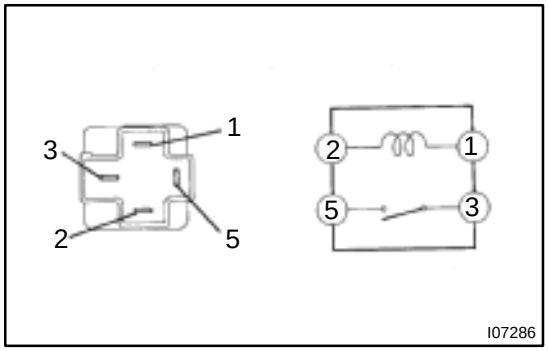

4. INSPECT COOLING FAN RELAY No. 3 (Marking: A.C FAN No. 3) CONTINUITY

Condition	Tester connection	Specified condition
Constant	1 – 2	Continuity
Apply B+ between terminals 1 and 2.	3 – 5	Continuity

If continuity is not as specified, replace the relay.

AC1F1–01

INSTALLATION

Installation is in the reverse order of removal (See page AC–53).

CONDENSER

AC1EZ–01

ON–VEHICLE INSPECTION

1. INSPECT CONDENSER FINS FOR BLOCKAGE OR DAMAGE

If the fins are clogged, wash them with water and dry with compressed air.

NOTICE:

Be careful not to damage the fins.

If the fins are bent, straighten them with a screwdriver or pliers.

2. INSPECT CONDENSER AND FITTINGS FOR LEAKAGE

Using a gas leak detector, check for leakage of refrigerant.

If there is leakage, check the tightening torque at the joints.

AC2OH–01

REMOVAL

1. DISCHARGE REFRIGERANT FROM REFRIGERATION SYSTEM

HINT:

At the time of installation, please refer to the following item.

Evacuate air from refrigeration system.

Charge system with refrigerant and inspect for leakage of refrigerant.

Specified amount: 600 ± 50 g (21.16 ± 1.76 oz.)

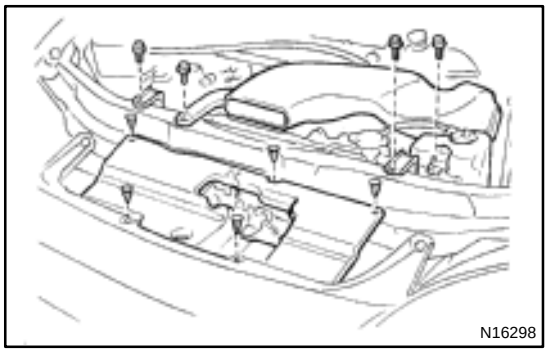

2. REMOVE THESE PARTS:

(a) Radiator upper seal
(b) Radiator upper mountings
(c) Air cleaner duct
(d) Engine coolant reservoir tank
(e) Receiver and holder (See page AC–50)

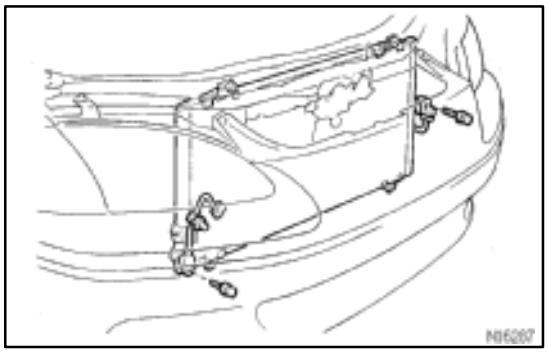

3. DISCONNECT LIQUID TUBE AND DISCHARGE HOSE

Remove the bolt, nut and disconnect the tube and hose.

Torque: 5.4 N·m (55 kgf·cm, 48 in.·lbf)

NOTICE:

Cap the open fittings immediately to keep moisture or dirt out of the system.

HINT:

At the time of installation, please refer to the following item.

Lubricate 2 new O–rings with compressor oil and install them to the tubes.

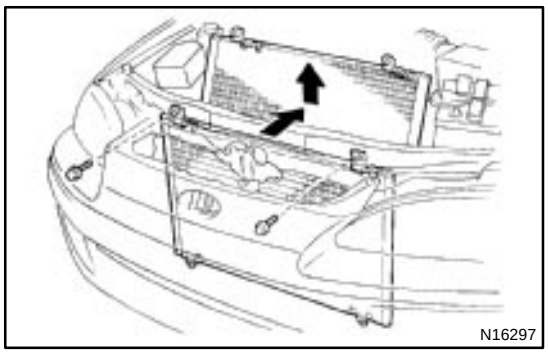

4. REMOVE CONDENSER

(a) Remove the 2 bolts and bracket.
(b) Remove the 2 bolts from condenser upper mountings.
(c) Push the radiator toward the engine.
(d) Push the condenser toward radiator and pull it upward.

HINT:

At the time of installation, please refer to the following item.

If condenser was replaced, add compressor oil to compressor.

Add 40 cc (1.4 fl.oz.)

Compressor oil: ND–OIL 8 or equivalent

AC1HI–01

COMPONENTS

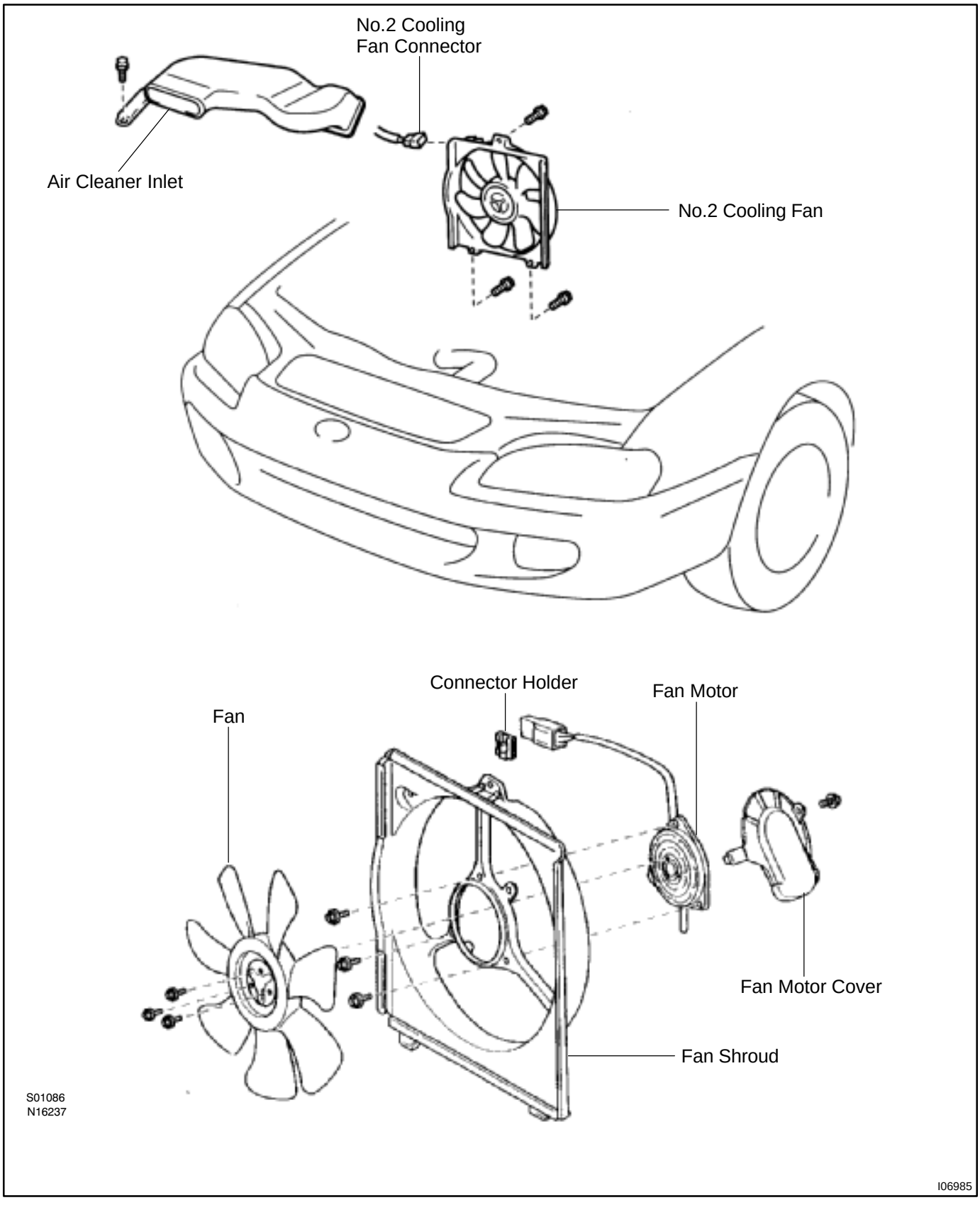

AC1FB–01

DISASSEMBLY

REMOVE FAN MOTOR

(a) Remove the 3 screws and fan.
(b) Remove the screw and motor cover.
(c) Disconnect the wire harness and connect from the fan shroud.
(d) Remove the 3 screws and motor.

AC1FD–01

INSTALLATION

Installation is in the reverse order of removal (See page AC–65).

CONDENSER FAN

AC1F9–02

ON–VEHICLE INSPECTION

1. INSPECT CONDENSER FAN OPERATION

Inspect the fan operation at these condiyions, as shown in the chart.

Test conditions:

- Start engine
- Blower speed control switch position ”HI”
- Temperature control dial at ”COOL” position
- Set on manifold gauge set
- A/C switch ON

Condition	Fan operation (Fan speed)
Engine coolant temperature 181 ˚C (83 ˚F) or below	Rotate (Low speed)
Engine coolant temperature 98 ˚C (208 ˚F) or above	Rotate (High speed)
Refrigerant pressure is less than 1,520 kPa (15.5 kgf/cm^2, 220 psi)	Rotate (Low speed)
Refrigerant pressure is 1,520 kPa (15.5 kgf/cm^2, 220 psi) or above	Rotate (High speed)

If operation is not as specified, proceed to the next inspection.

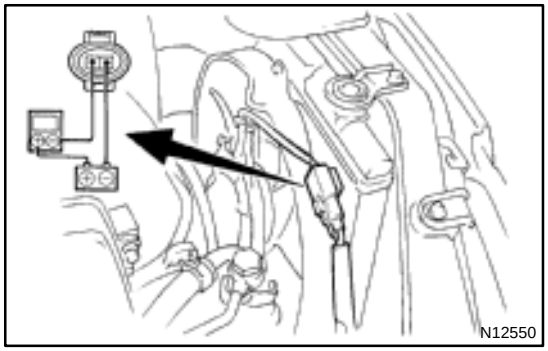

2. INSPECT CONDENSER FAN MOTOR OPERATION

(a) Disconnect the connector.

(b) Connect battery and ammeter.

(c) Check that the fan rotates smoothly, and then check the reading on the ammeter.

Specified amperage: 10.1 – 1.8 A at 20 ˚C (68 ˚F)

- If operation is not as specified, replace the fan motor.
- If operation is as specified, check the pressure switch, cooling fan relays and engine coolant temp. switch.

AC1FC–01

REASSEMBLY

Reassembly is in the reverse order of disassembly (See page AC–66).

AC1FA–01

REMOVAL

1. DRAIN ENGINE COOLANT FROM RADIATOR

HINT:

It is not necessary to drain out all the coolant.

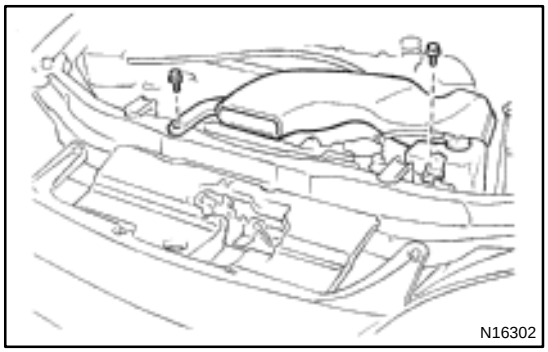
N16302

2. REMOVE THESE PARTS:

(a) Air cleaner intake

(b) Engine coolant reservoir tank

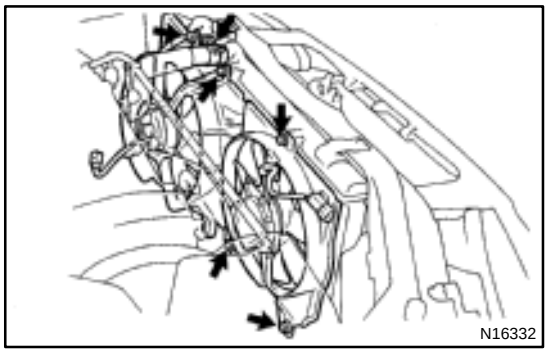
N16332

3. REMOVE CONDENSER FAN

(a) Disconnect the connector.

(b) Remove the 3 bolts and radiator fan.
Torque: 7.0 N·m (70 kgf·cm, 61 in.·lbf)

AC1EC–01

COMPONENTS

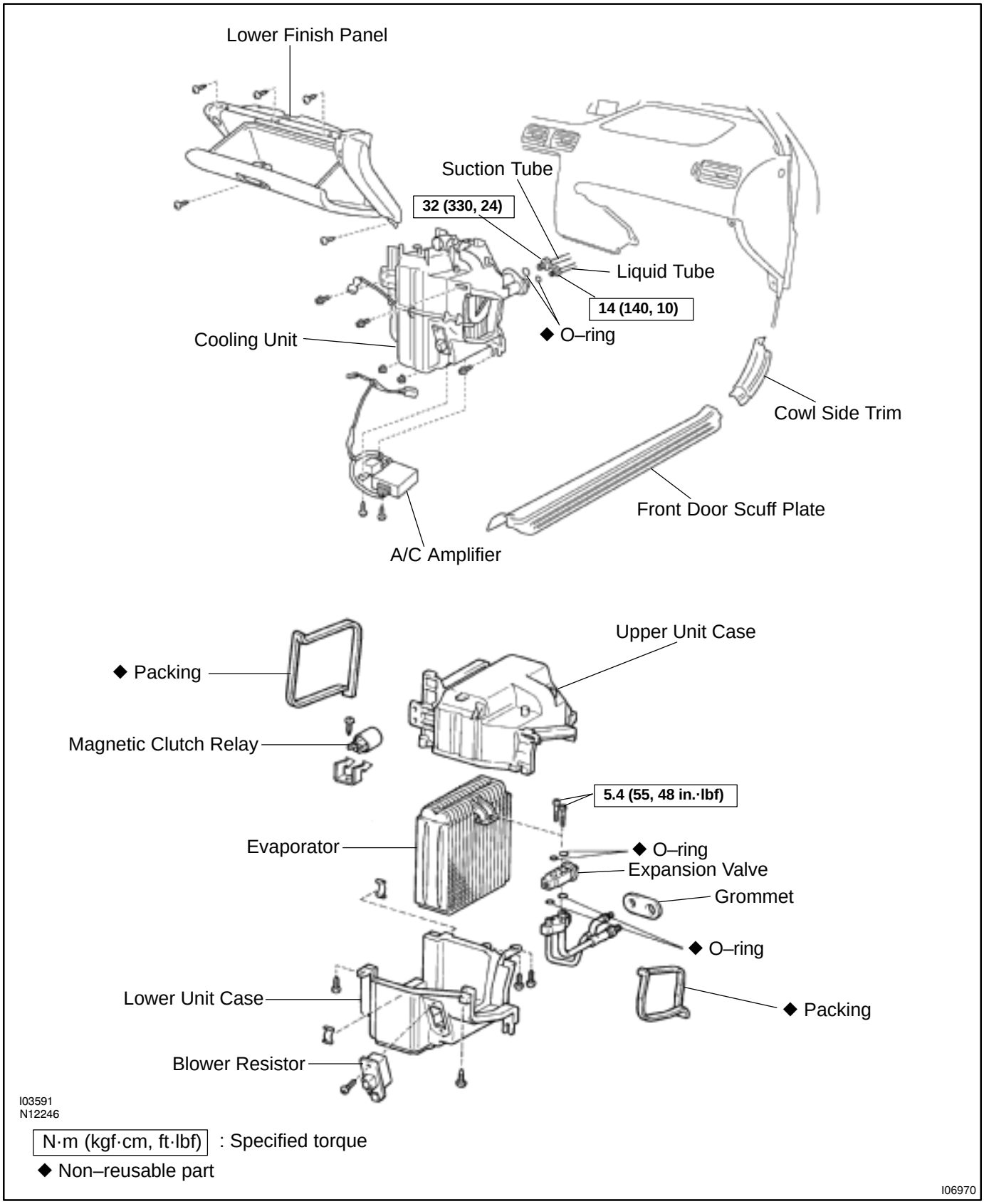

N·m (kgf·cm, ft·lbf) : Specified torque

◆ Non–reusable part

I06970

AC1EE–04

DISASSEMBLY

1. REMOVE THESE PARTS:

(a) Wire harness

(b) Magnetic clutch relay

2. REMOVE BLOWER RESISTOR

Remove the 2 screws and blower resistor.

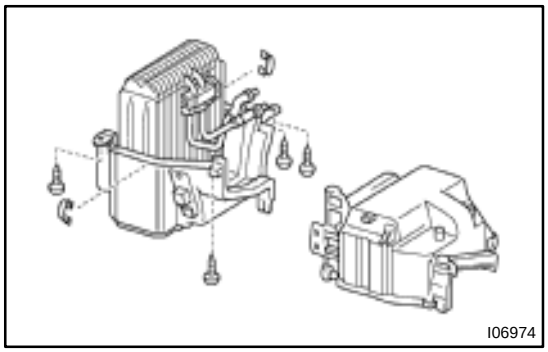
I06974

3. SEPARATE UPPER AND LOWER UNIT CASE

(a) Using a knife, cut off the each packing.

(b) Remove 2 clips and 4 screws.

(c) Separate the upper and lower unit case.

4. REMOVE EVAPORATOR FROM LOWER UNIT CASE

HINT:

At the time of reassembly, please refer to the following item.

If evaporator was replaced, add compressor oil to compressor.

Add 40 cc (1.4 fl.oz.)

Compressor oil: ND–OIL 8 or equivalent

5. REMOVE THERMISTOR

(a) Disconnect the connector clamp.

(b) Pull out the thermistor.

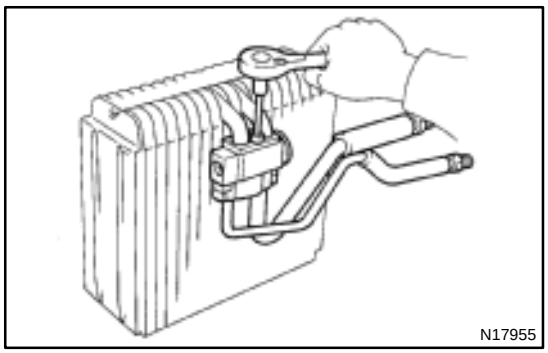
N17955

6. REMOVE EXPANSION VALVE

Using a hexagon wrench, remove the 2 bolts and separate the expansion valve and evaporator.

Torque: 5.4 N·m (55 kgf·cm, 48 in.·lbf)

HINT:

At the time of reassembly, please refer to the following item.

Lubricate 4 new O–rings with compressor oil and install them to the tubes.

AC1EF–02

INSPECTION

1. CHECK EVAPORATOR FINS FOR BLOCKAGE

If the fins are clogged, clean them with compressed air.

NOTICE:

Never use water to cleane the evaporator.

2. CHECK FITTINGS FOR CRACKS OR SCRATCHS

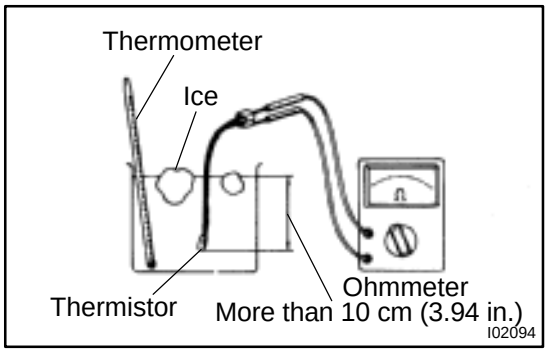

3. INSPECT THERMISTOR RESISTANCE

(a) Place the thermistor in cold water, and while changing the temperature of the water, measure resistance at the connector and at the same time, measure temperature of the water with a thermometer.

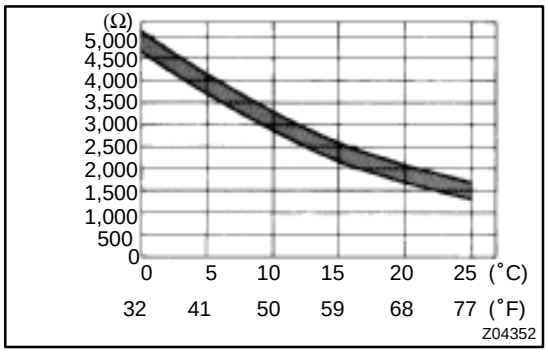

(b) Compare the 2 readings on the chart.

If resistance value is not as specified, replace the thermistor.

AC1EH–01

INSTALLATION

Installation is in the reverse order of removal (See page AC–26).

COOLING UNIT

AC1EB–01

ON–VEHICLE INSPECTION

1. REMOVE LOWER FINISH PANEL
(See page BO–54)

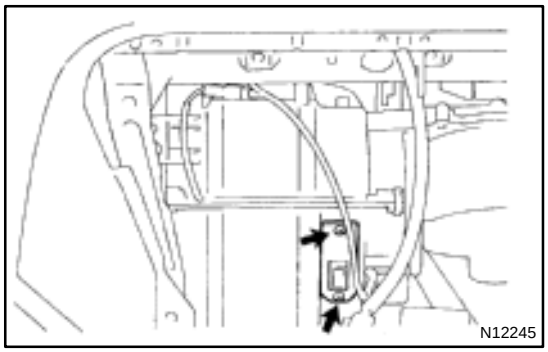

2. REMOVE BLOWER RESISTOR

(a) Disconnect the connector.

(b) Remove the 2 screws and blower resistor.

3. INSPECT EVAPORATOR AND FITTINGS FOR LEAKAGE

Using a gas leak detector, check for leakage.

If there is leakage, check the tightening torqure at the joints or check the evaporator.

4. CHECK QUANTITY OF GAS DURING REFRIGERATION CYCLE

5. SET ON MANIFOLD GAUGE SET

6. RUN ENGINE

(a) Run the engine at 1,500 rpm for at least 5 minutes.

(b) Then check that the high pressure reading is 1.37 – 1.57 Mpa (14 – 16 kgm/cm^2, 199 – 228 psi).

7. CHECK EXPANSION VALVE

If the expansion valve is faulty, the low pressure reading will drop to 0 kpa (0 kgm/cm^2, 0 psi).

HINT:

When the low pressure drops to 0 kpa (0 kgm/cm^2, 0 psi), feel the receiver's IN and OUT sides for zero temperature difference.

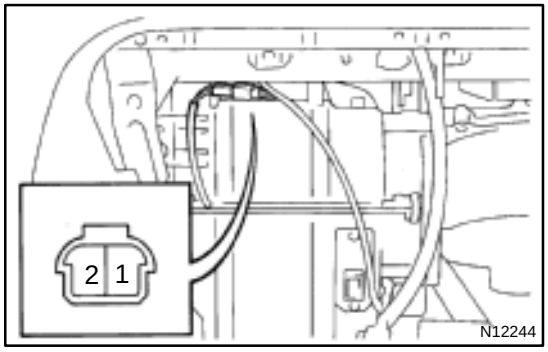

8. INSPECT THERMISTOR RESISTANCE

(a) Disconnect the connector.

(b) Measure resistance between terminals.

Standard resistance: 1,700 Ω at 25 °C (77 °F)

If resistance is not as specified, replace the thermistor.

AC1EG–01

REASSEMBLY

Reassembly is in the reverse order of disassembly (See page AC–27).

AC2OC–01

REMOVAL

1. DISCONNECT REFRIGERANT FROM REFRIGERATION SYSTEM

HINT:

At the time of reassembly, please refer to the following item.

Evacuate air from refrigeration system.

Charge system with refrigerant and inspect for leakage of refrigerant.

Specified amount: 600 ± 50 g (21.16 ± 1.76 oz.)

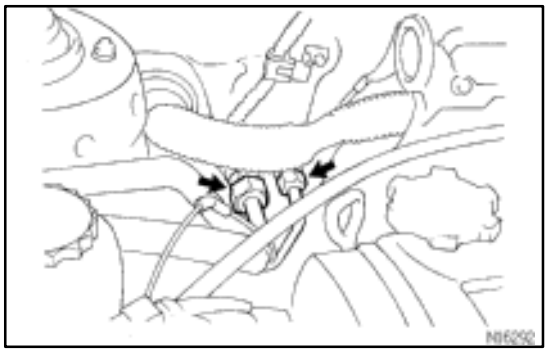

2. DISCONNECT SUCTION TUBE AND LIQUID TUBE FROM COOLING UNIT FITTINGS

Loosen the 2 nuts and disconnect the both tubes.

Torque:

Liquid tube: 14 N·m (140 kgf·cm, 10 ft·lbf)

Suction tube: 32 N·m (330 kgf·cm, 24 ft·lbf)

NOTICE:

Cap the open fittings immediately to keep moisture or dirt out of the system.

HINT:

At the time of installation, please refer to the following item.

Lubricate 2 new O–rings with compressor oil and install them to the tubes.

3. REMOVE LOWER FINISH PANEL

(See page BO–54)

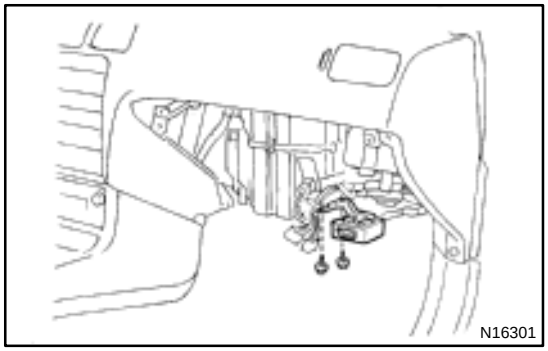

4. REMOVE A/C AMPLIFIER

(a) Disconnect the connector.

(b) Remove the 2 screws and amplifier.

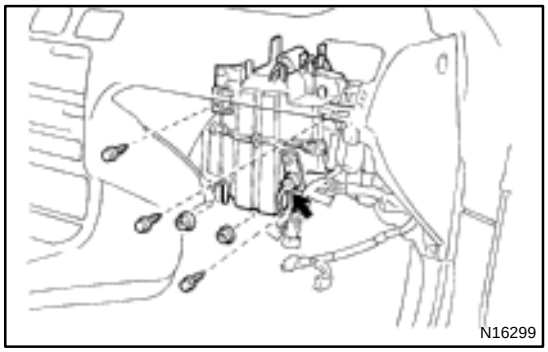

5. REMOVE COOLING UNIT

(a) Disconnect the connector.

(b) Remove the 3 screws, 2 nuts and the cooling unit.

HINT:

At the time of installation, please refer to the following item.

Do not reuse the 2 rivets.

AC1E5–02

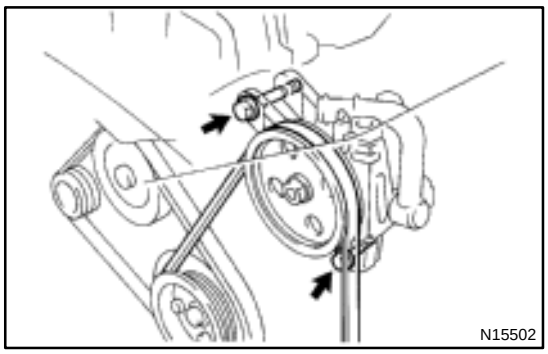

INSTALLATION

INSTALL DRIVE BELT

(a) Install the drive belt.

(b) Using a adjusting bolt, adjust drive belt tension.
New belt: 160 ± 25 lbf
Used belt: 100 ± 20 lbf

(c) Tighten the 2 PS pump set bolts.
Torque: 43 N·m (440 kgf·cm, 32 ft·lbf)

AC1E3–02

ON–VEHICLE INSPECTION

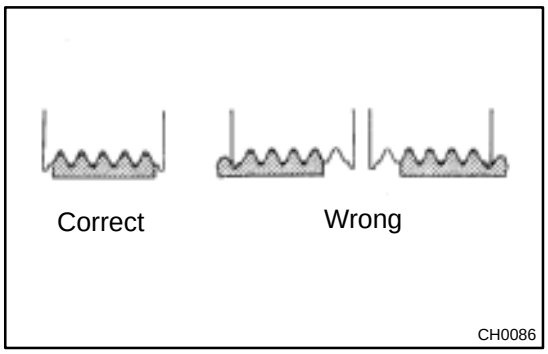

1. INSPECT DRIVE BELT'S INSTALLATION CONDITION

Check that the drive belt fits properly in the ribbed grooves.

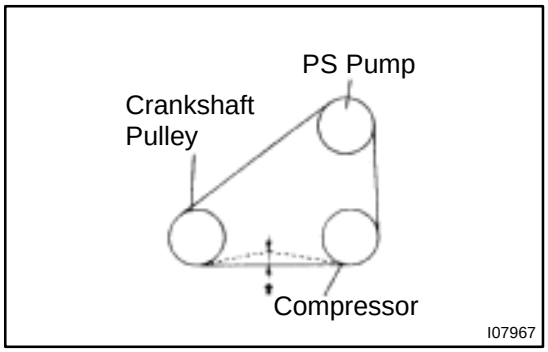

2. INSPECT DRIVE BELT TENSION

Using a belt tension gauge, check the drive belt tension.

Belt tension gauge:
Nippondenso BTG–20 (95506–00020) or Borroughs No. BT–33–73F
Drive belt tension:
New belt 160 ± 25 lbf
Used belt 100 ± 20 lbf

HINT:

- "New belt" refers to a belt which has been used less than 5 minutes on a running engine.
- "Used belt" refers to a belt which has been used on a running engine for 5 minutes or more.

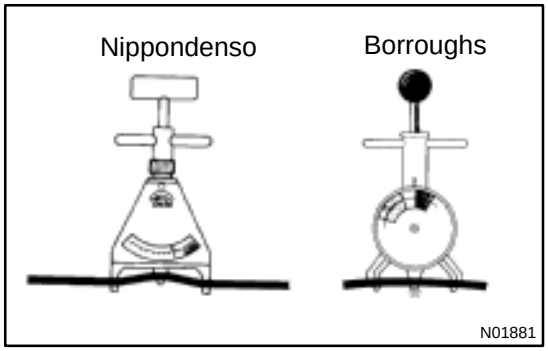

- After installing the drive belt, check that it fits properly in the ribbed grooves.

AC1E4–01

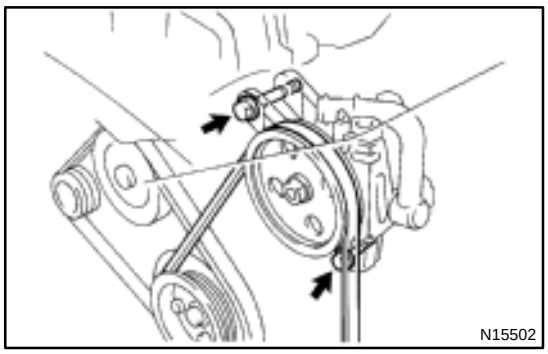

REMOVAL

REMOVE DRIVE BELT

(a) Loosen the 2 PS pump set bolts.
(b) Loosen the adjusting bolt.
(c) Remove the drive belt.

ENGINE COOLANT TEMPERATURE (ECT) SWITCH

AC1FN–01

INSPECTION

1. DRAIN ENGINE COOLANT FROM RADIATOR

HINT:

It is not necessary to drain out all the coolant.

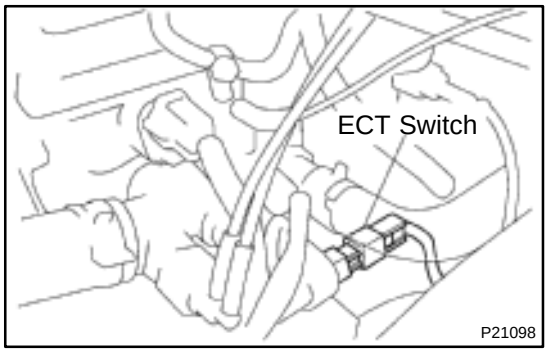

2. REMOVE ECT SWITCH

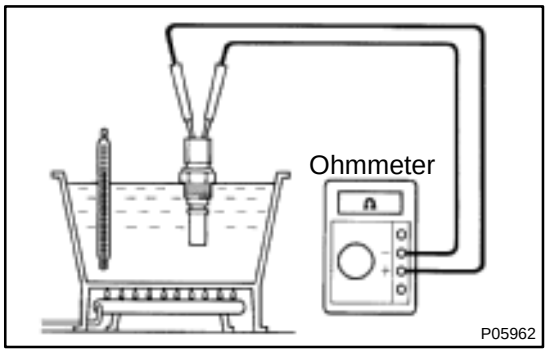

3. INSPECT SWITCH CONTINUITY

(a) Using an ohmmeter, check that no continuity exists between the terminals when the coolant temperature is above 90 ˚C (194 ˚F).

(b) Using an ohmmeter, check that continuity exists between the terminals when the coolant temperature is below 83 ˚C (181 ˚F)

If no continuity exists, replace the switch.

4. INSTALL ECT SWITCH

5. REFILL ENGINE COOLANT

AC1FH–01

COMPONENTS

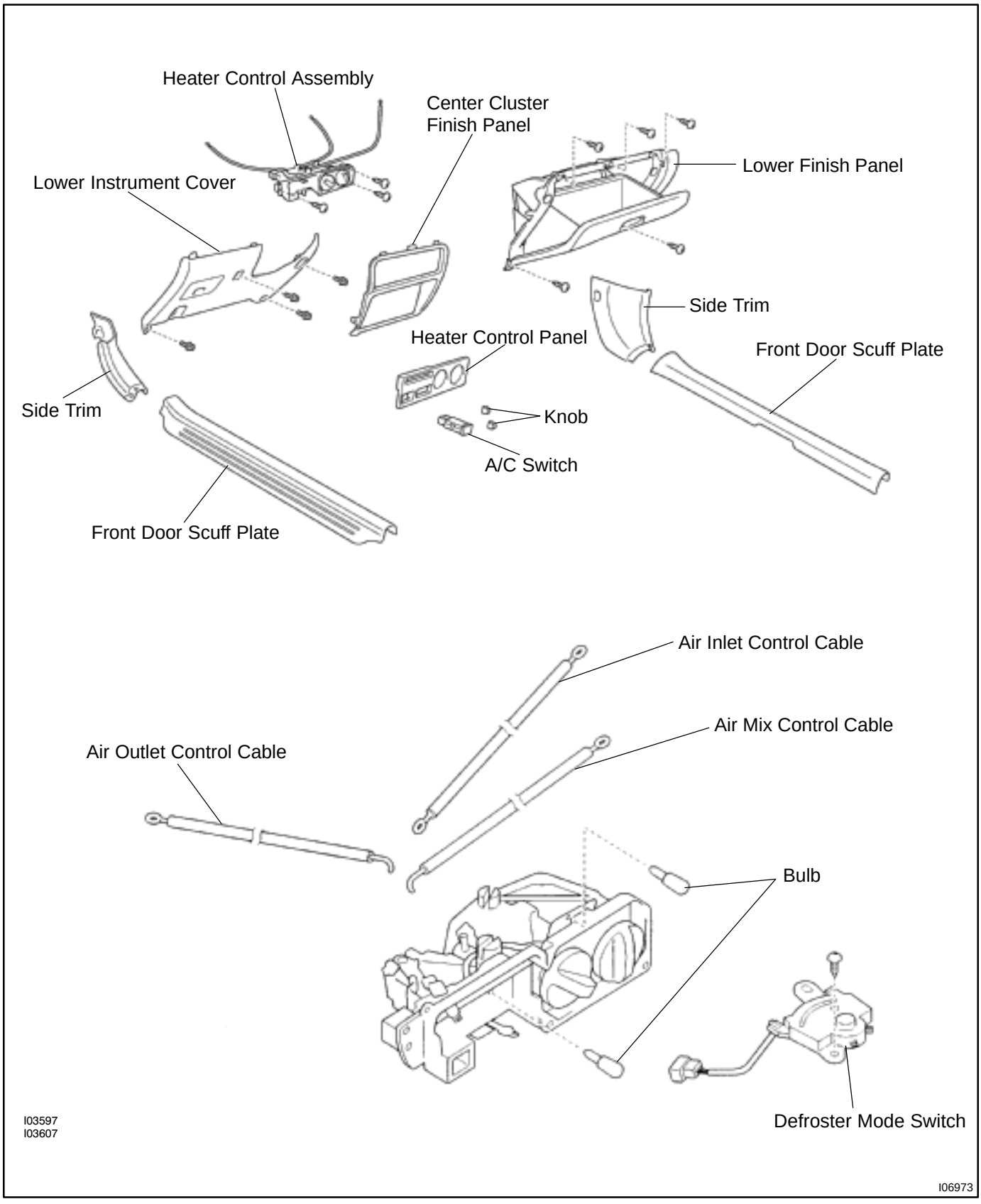

AC1FJ–01

DISASSEMBLY

1. PULL OUT BULB

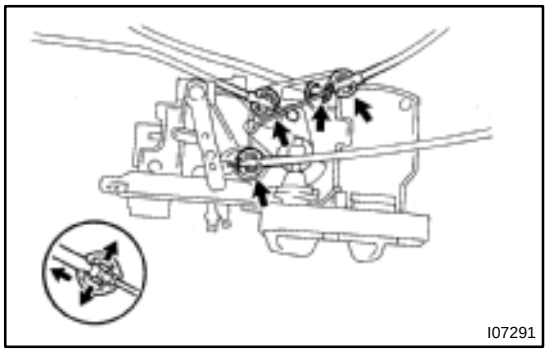

2. REMOVE HEATER CONTROL CABLES

(a) Using a screwdriver, spread the claw of the cable clamp and disconnect the outer cable.

HINT:

Tape the screwdriver tip before use.

(b) Remove the inner cable from the heater control assembly.

3. REMOVE DEFROSTER MODE SWITCH

(a) Disconnect the connector clamp.

(b) Remove the screw and switch.

AC1FK–02

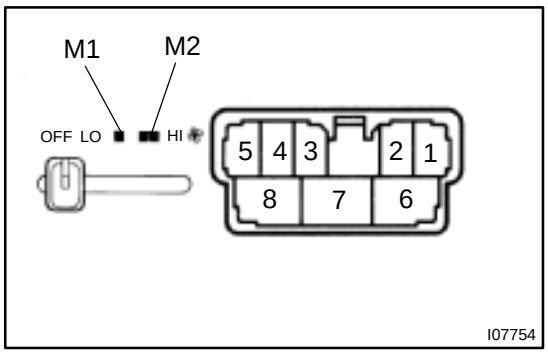

INSPECTION

1. INSPECT BLOWER SWITCH CONTINUITY

Position / Circuit	Tester connection	Specified condition
OFF	–	No continuity
LO	1 – 8	Continuity
M1	1 – 3 – 8	Continuity
M2	1 – 2 – 8	Continuity
HI	1 – 6 – 8	Continuity
Illumination circuit	4 – 5	Continuity

Switch continuity:
If continuity is not as specified, replace the heater control assembly.
Illumination operation:
If continuity is not as specified, replace the bulb.

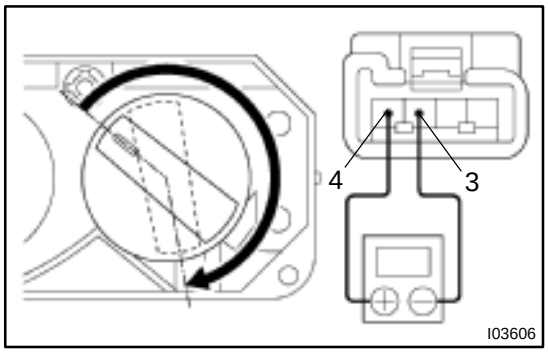

2. INSPECT DEFROSTER MODE SWITCH OPERATION

Turn the mode dial to DEF. position, then check that the continuity exists between terminals 3 and 4.
If no continuity exists, replace the switch.

AC1FM–02

INSTALLATION

Installation is in the reverse order of removal (See page AC–76).

1. SET HEATER CONTROL DIALS AND LEVER IN THESE CONDITIONS:

(a) Air inlet control lever ”RECIRC” position.
(b) Mode control dial ”FACE” position
(c) Temperature control dial ”COOL” position

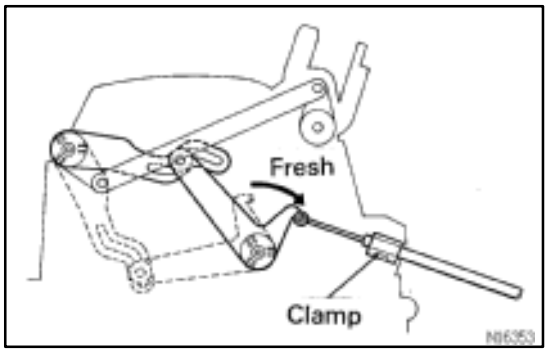

2. ADJUST AIR INLET DAMPER CONTROL CABLE

Set the air inlet damper on ”RECIRC” position and install the control cable and lock clamp.

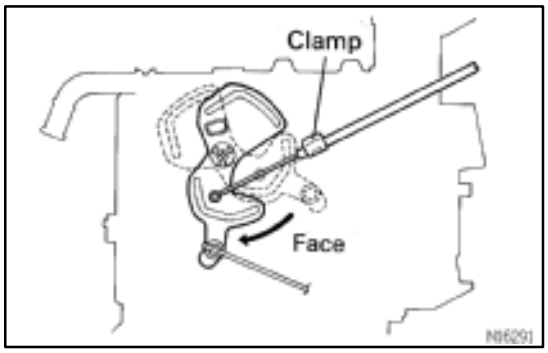

3. ADJUST MODE DAMPER CONTROL CABLE

Set the air inlet damper on ”FACE” position and install the control cable and lock the clamp.

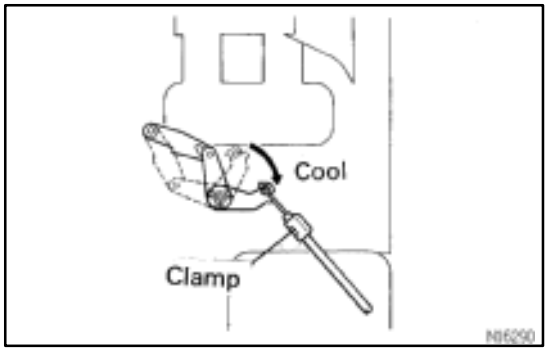

4. ADJUST AIR MIX DAMPER CONTROL CABLE

Set the air mix damper on ”COOL” position and install the control cable and lock the clamp.

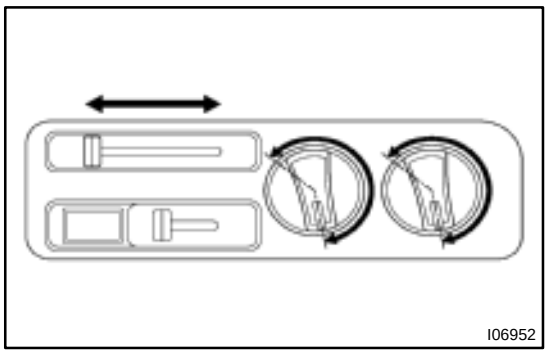

HEATER CONTROL ASSEMBLY

AC1FG–01

ON–VEHICLE INSPECTION

INSPECT HEATER CONTROL LEVER OPERATION

Move the control lever and left and right then check that click should can be heard or recoil is felt.

If click sound can not be heard or recoil is felt,adjust the control cable or check control cable and heater control assembly.

AC1FL–01

REASSEMBLY

Reassembly is in the reverse order of disassembly (See page AC–78).

AC1FI–02

REMOVAL

1. REMOVE THESE PARTS:

(a) Cowl side trim
(b) Scaff plate
(c) Glove compartment parts
(d) Lower finish panel
(e) Center cluster finish panel

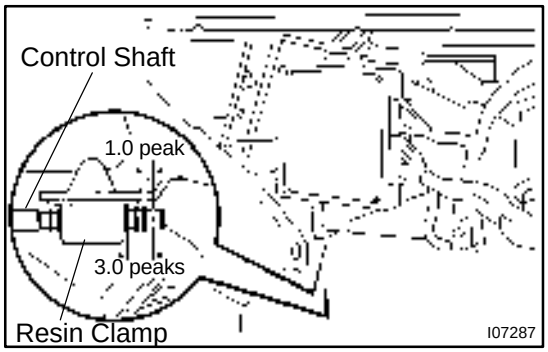

2. DISCONNECT HEATER CONTROL CABLE

(a) Set temperature control to ”COOL” position.
(b) Remember the number of the control shaft portion sticking up from the resin clamp.

HINT:
Incase of the illustration to the left, it has 3.0 peaks.

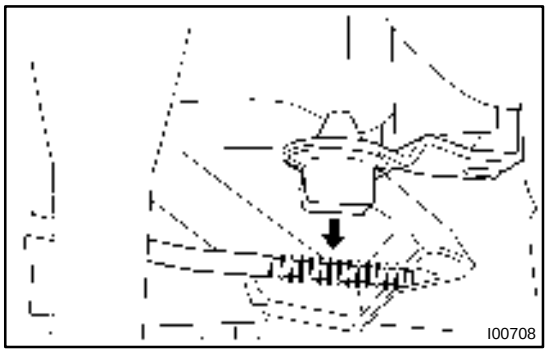

(c) Disconnect the control shaft from the resin clamp.

3. DISCONNECT A/C CONTROL CABLES

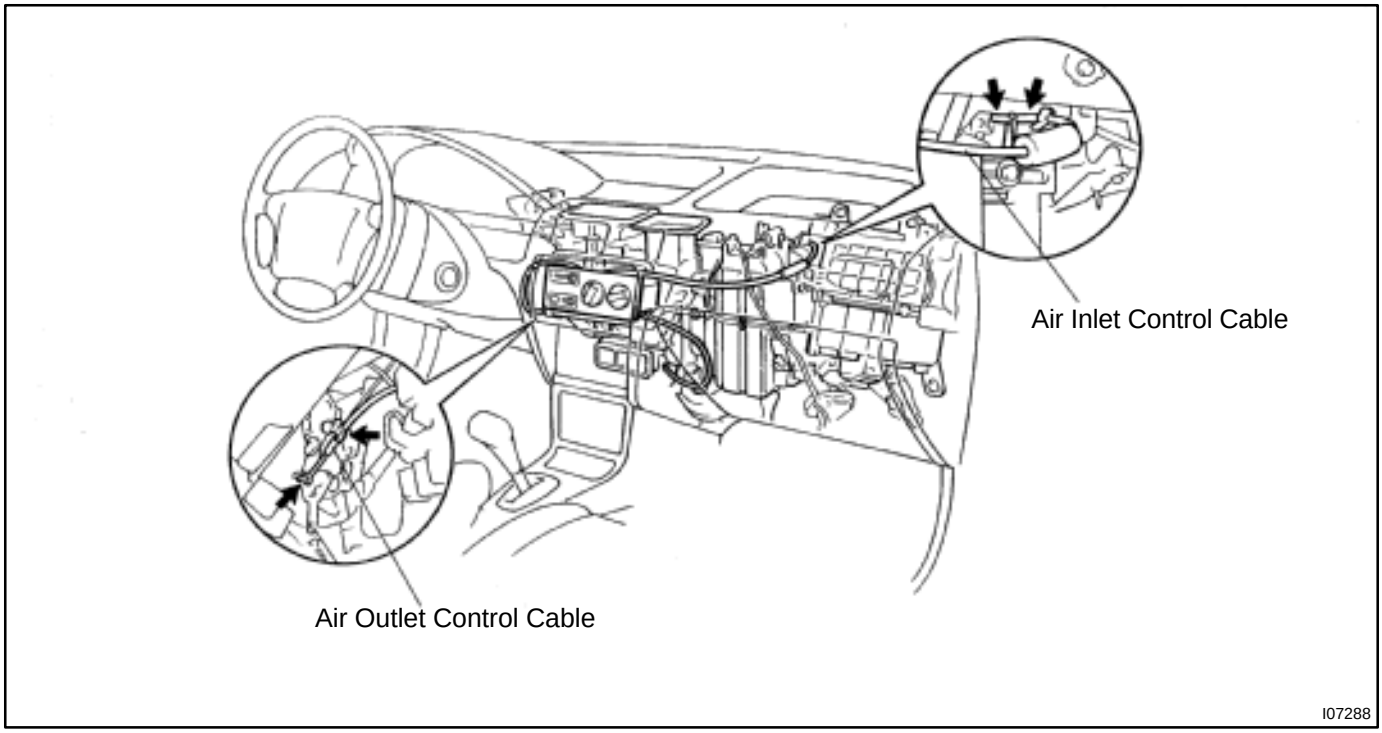

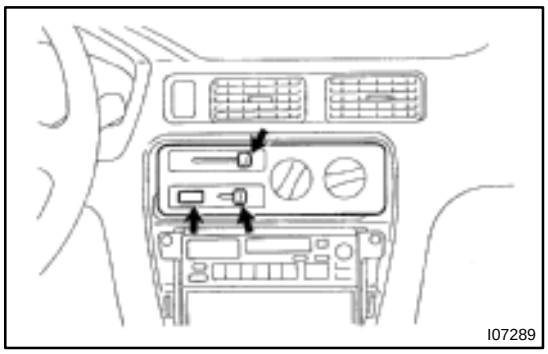

4. REMOVE HEATER CONTROL ASSEMBLY

(a) Remove the heater control knobs.

(b) Using pliers, pull out the A/C switch.

(c) Remove the heater control panel.

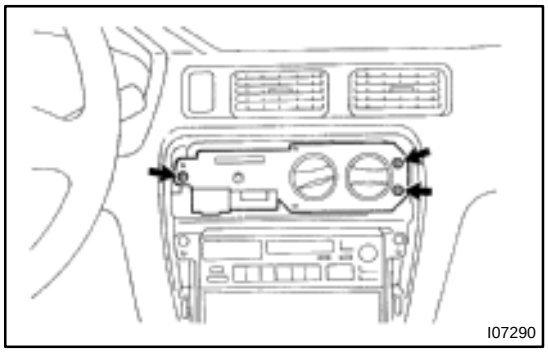

(d) Remove the 3 screws and pull out the A/C control assembly, then disconnect the connector.

HEATER UNIT

AC1EI–01

COMPONENTS

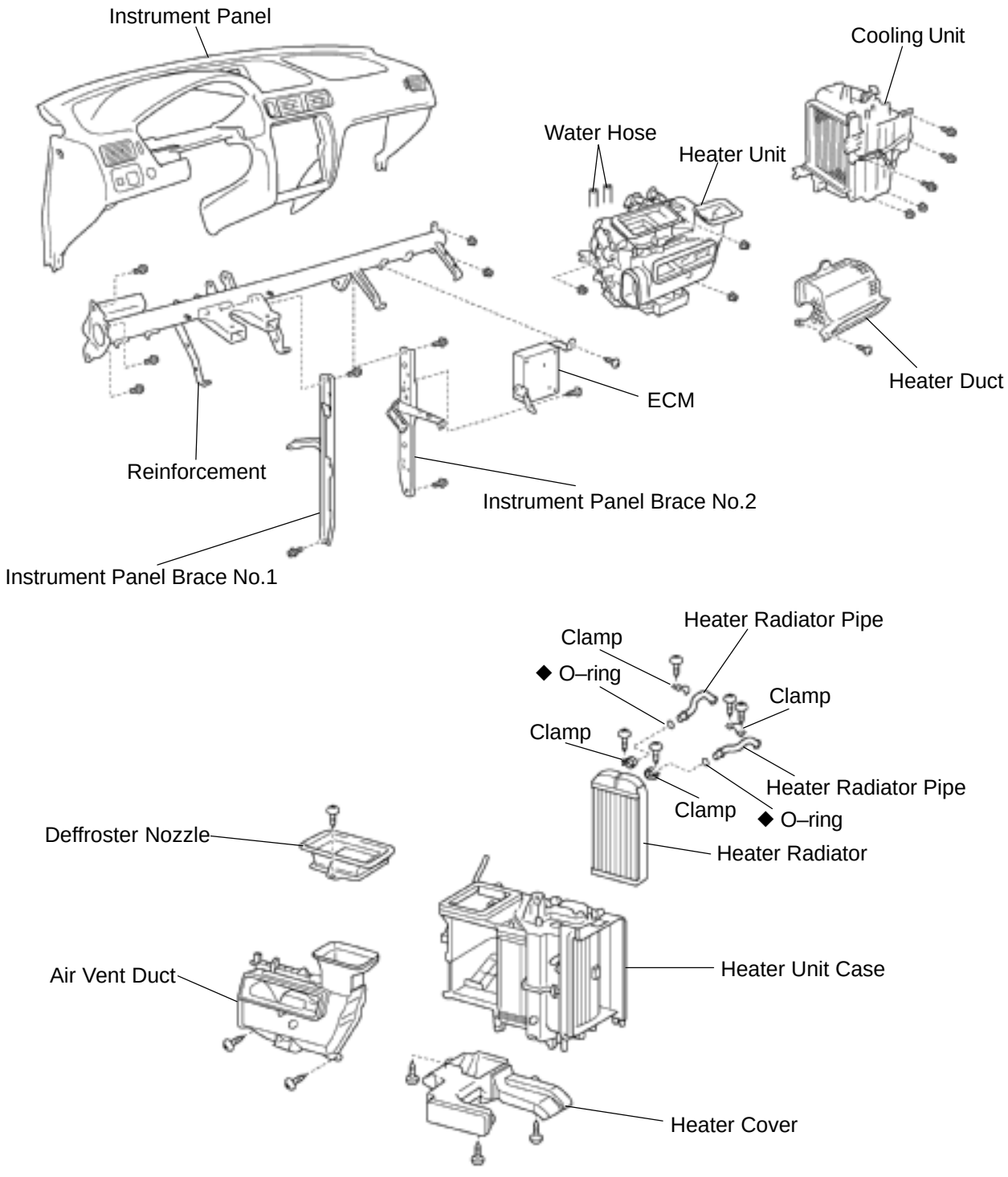

I03592
I07965

◆ Non–reusable part

I06971

AC1EK–01

DISASSEMBLY

1. REMOVE DEFROSTER NOZZLE

Remove the screw and nozzle.

2. REMOVE AIR VENT DUCT

(a) Disconnect the air vent control link.

(b) Remove the 2 screws and duct.

3. REMOVE HEATER COVER

Remove the 3 screws and cover.

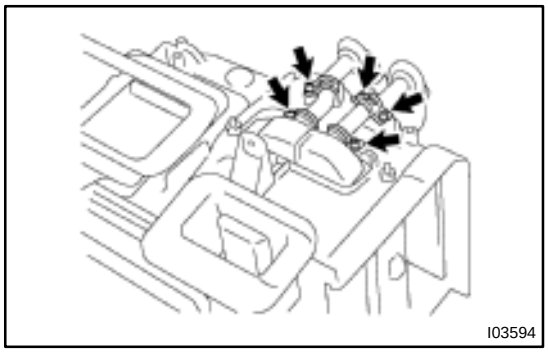

4. REMOVE HEATER RADIATOR

(a) Remove the 3 screws and 2 clamps.

(b) Pull out the heater radiator.

(c) Remove the 2 screws, 2 clamps and 2 heater radiator pipes.

HINT:

Do not reuse the 2 O–rings.

AC1EL–01

INSPECTION

INSPECT FINS FOR BLOCKAGE

If the fins are clogged, clean them with compressed air.

AC1EN–01

INSTALLATION

Installation is in the reverse order of removal (See page AC–32).

AC1EM–01

REASSEMBLY

Reassembly is in the reverse order of disassembly (See page AC–33).

AC2OD–01

REMOVAL

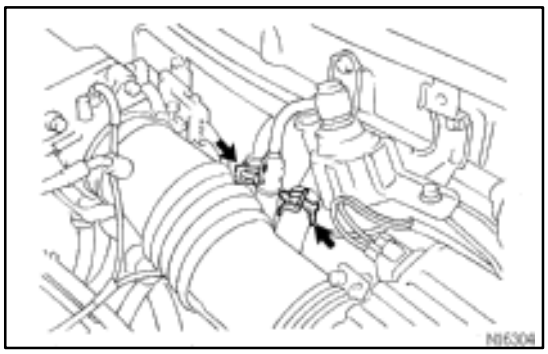

1. REMOVE COOLING UNIT
(See page AC–26)

2. DRAIN ENGINE COOLANT FROM RADIATOR

HINT:
It is not necessary to drain out all the coolant.

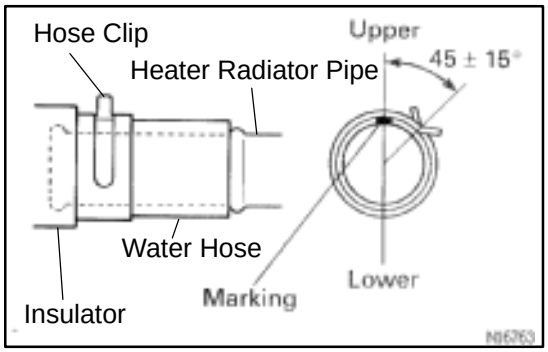

3. DISCONNECT WATER HOSES FROM HEATER RADIATOR PIPES

HINT:
At the time of installation, please refer to the following items.

- Push the water hose onto the heater radiator pipe as far as the second ridge on the pipe.
- Install the hose clip in a position, as shown in the illustration.

4. REMOVE PIPE GROMMETS

5. REMOVE INSTRUMENT PANEL SAFETY PAD AND REINFORCEMENT
(See page BO–54)

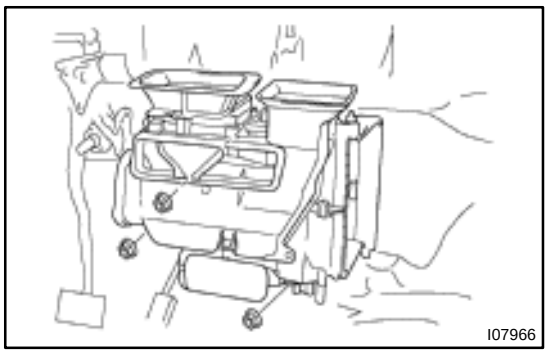

6. REMOVE HEATER UNIT

Remove the 3 nuts and the heater unit.

HINT:
At the time of installation, please refer to the following items.
Do not reuse the 2 nuts.

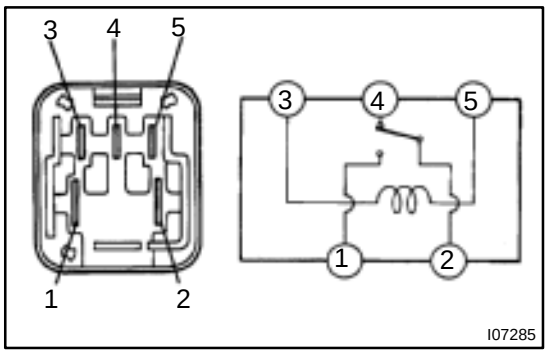

HEATER MAIN RELAY

AC2OJ–01

INSPECTION

1. REMOVE HEATER MAIN RELAY

2. INSPECT HEATER MAIN RELAY CONTINUITY

Condition	Tester connection	Specified condition
Constant	2 – 4 3 – 5	Continuity
Apply B+ between terminals 3 and 5.	1 – 2	Continuity

If continuity is not as specified, replace the relay.

3. INSTALL HEATER MAIN RELAY

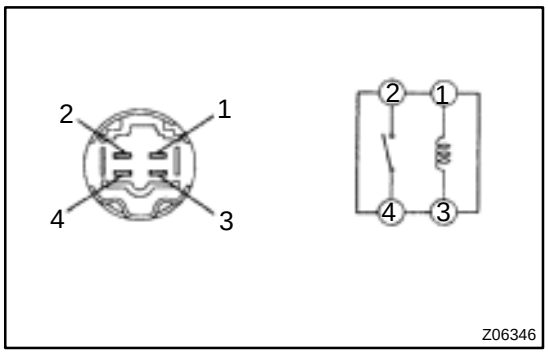

MAGNETIC CLUTCH RELAY

AC2OK–01

INSPECTION

1. REMOVE MAGNETIC CLUTCH RELAY FROM COOLING UNIT

2. INSPECT MAGNETIC CLUTCH RELAY CONTINUITY

Condition	Tester connection	Specified condition
Constant	1 – 3	Continuity
Apply B+ between terminals 1 and 3.	2 – 4	Continuity

If continuity is not as specified, replace the relay.

AC1E7–01

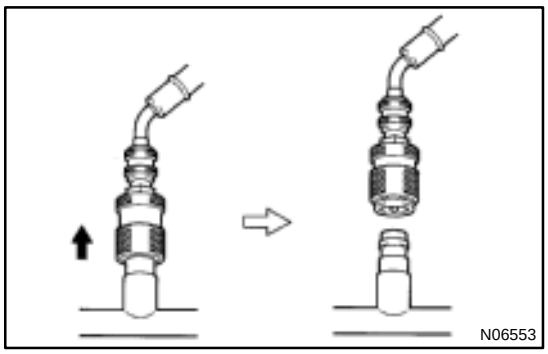

SET OFF

1. **CLOSE BOTH HAND VALVES OF MANIFOLD GAUGE SET**
2. **DISCONNECT QUICK DISCONNECT ADAPTERS FROM SERVICE VALVES ON REFRIGERANT LINE**

HINT:

Slide the sleeve of the quick disconnect adapter upward to unlock the adapter and remove it from the service valve.

3. **INSTALL CAPS TO SERVICE VALVES ON REFRIGERANT LINE**

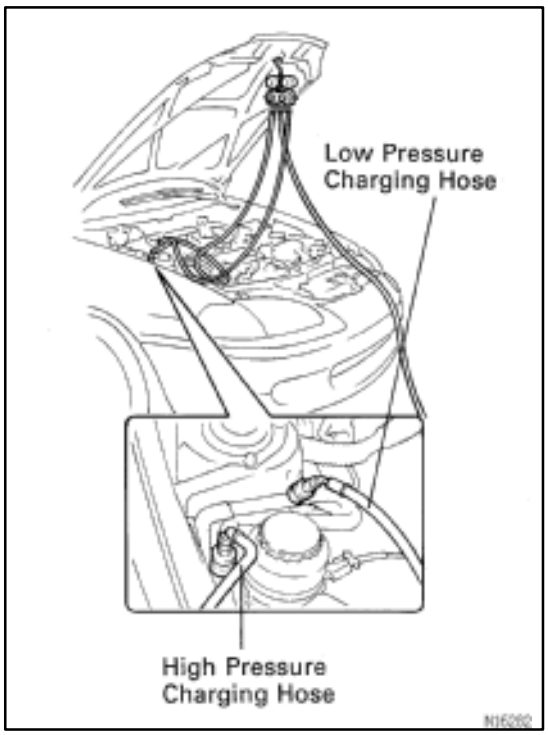

MANIFOLD GAUGE SET

AC1E6–02

SET ON

1. CONNECT CHARGE HOSES TO MANIFOLD GAUGE SET

Tighten the nuts by hand.

CAUTION:

Do not connect the wrong hoses.

2. CONNECT QUICK DISCONNECT ADAPTERS TO CHARGING HOSES

Tighten the nuts by hand.

3. CLOSE BOTH HAND VALVES OF MANIFOLD GAUGE SET

4. REMOVE CAPS FROM SERVICE VALVE ON REFRIGERANT LINES

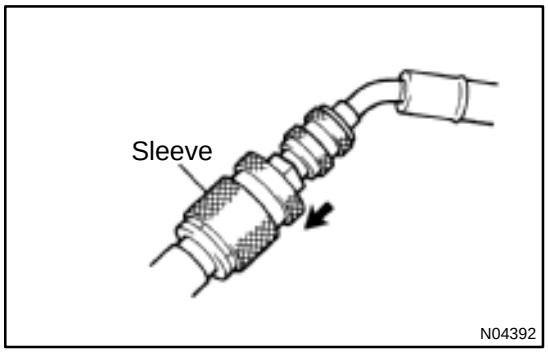

5. CONNECT QUICK DISCONNECT ADAPTER TO SERVICE VALVES

HINT:

Push the quick disconnect adapter onto the service valve, then slide, the sleeve of the quick disconnect adapter downward to lock it.

AC1F6–01

INSTALLATION

Installation is in the reverse order of removal (See page AC–58).

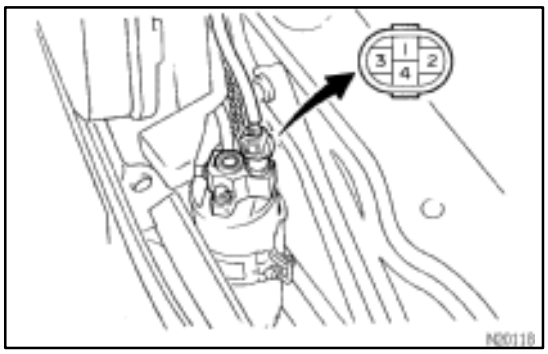

PRESSURE SWITCH

AC1F4–02

ON–VEHICLE INSPECTION

1. **SET ON MANIFOLD GAUGE SET**
   (See page AC–19)
2. **DISCONNECT CONNECTOR FROM PRESSURE SWITCH**
3. **RUN ENGINE AT APPROX. 1,500 RPM**

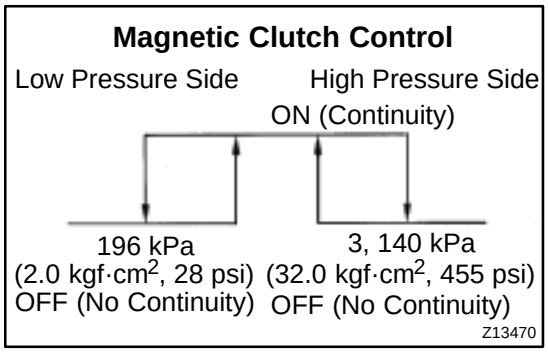

4. **Magnetic Clutch Control:**
   INSPECT PRESSURE SWITCH OPERATION

(a) Connect the positive (+) lead from the ohmmeter to terminal 4 and the negative (–) lead to terminal 1.

(b) Check continuity between terminals when refrigerant pressure is charged, as shown in the illustration.

If operation is not as specified, replace the pressure switch.

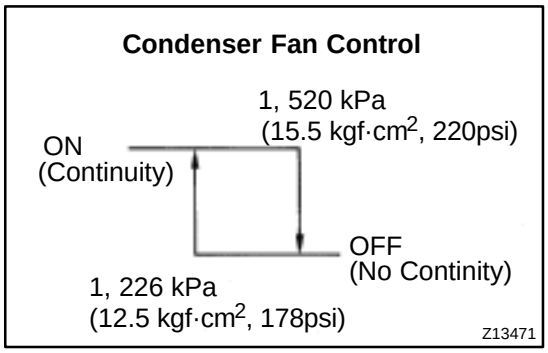

5. **Condenser Fan Control:**
   INSPECT PRESSURE SWITCH OPERATION

(a) Connect the positive (+) lead from the ohmmeter to terminal 2 and the negative (–) lead to terminal 3.

(b) Check continuity between terminals when refrigerant pressure is changed, as shown in the illustration.

If operation is not as specified, replace the pressure switch.

6. **STOP ENGINE AND SET OFF MANIFOLD GAUGE SET**
7. **CONNECT CONNECTOR TO PRESSURE SWITCH**

AC2OI–01

REMOVAL

1. DISCHARGE REFRIGERANT FROM REFRIGERANT SYSTEM

HINT:

At the time of installation, please refer to the following item.

Evacuate air from refrigeration system.

Charge system with refrigerant and inspect for leakage of refrigerant.

Specified amount: 600 ± 50 g (21.17 ± 1.76 oz.)

2. REMOVE PRESSURE SWITCH

(a) Disconnect the connector.

(b) Remove the pressure switch from the liquid tube.

Torque: 10 N·m (100 kgf·cm, 7 ft·lbf)

HINT:

- Lock the switch mount on the tube with an open end wrench, being careful not to deform the tube, and remove the switch.
- At the time of installation, please refer to the following item.
  Lubricate a new O–ring with compressor oil and install them to the switch.

AC2OG–01

INSTALLATION

Installation is in the reverse order of removal (See page AC–50).

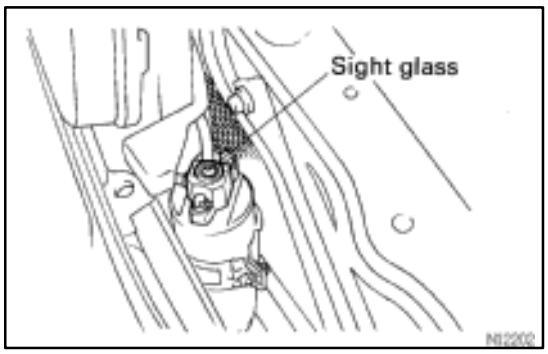

RECEIVER

AC2OE–01

ON–VEHICLE INSPECTION

INSPECT SIGHT GLASS, FUSIBLE PLUG AND FITTINGS FOR LEAKAGE

Using a gas leak detector, check for leakage of refrigerant.
If there is leakage, check the tightening torque at the joints.

AC2OF–01

REMOVAL

1. DISCHARGE REFRIGERANT FROM REFRIGERATION SYSTEM

HINT:

At the time of reassembly, please refer to the following item.

Evacuate air from refrigeration system. Charge system withe refrigerant and inspect for leakage of refrigerant.

Specified amount: 600 ± 50 g (21.16 ± 1.76 oz.)

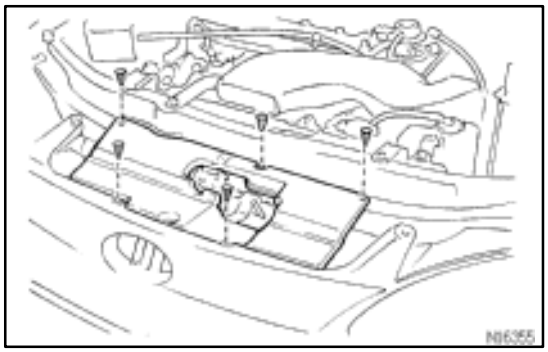

2. REMOVE RADIATOR UPPER SEAL

3. DISCONNECT 2 LIQUID TUBES FROM RECEIVER

Remove the 2 bolts and both tubes.

Torque: 5.4 N·m (55 kgf·cm, 48 in.·lbf)

NOTICE:

Cap the open fittings immediately to keep moisture dirt out of the system.

HINT:

At the time of reassembly, please refer to the following item.

Lubricate 2 new O–rigs with compressor oil and install the tubes.

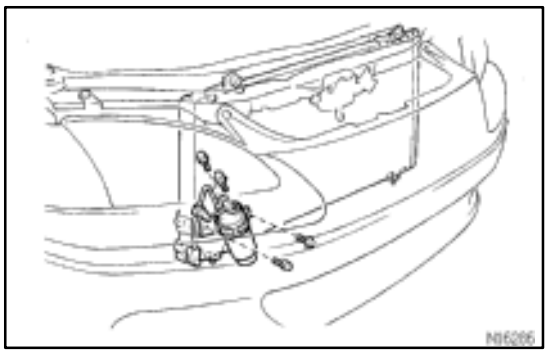

4. REMOVE RECEIVER

Remove the holder bolt an pull the receiver upward from the receiver holder.

HINT:

At the time of reassembly, please refer to the following item.

If receiver was replace, add compressor oil to compressor.

Add 10 cc (0.4 lf.oz.)

Compressor oil: ND–OIL 8 or equivalent

5. REMOVE RECEIVER HOLDER

Remove the bolt and holder.

AC1E9–02

LOCATION

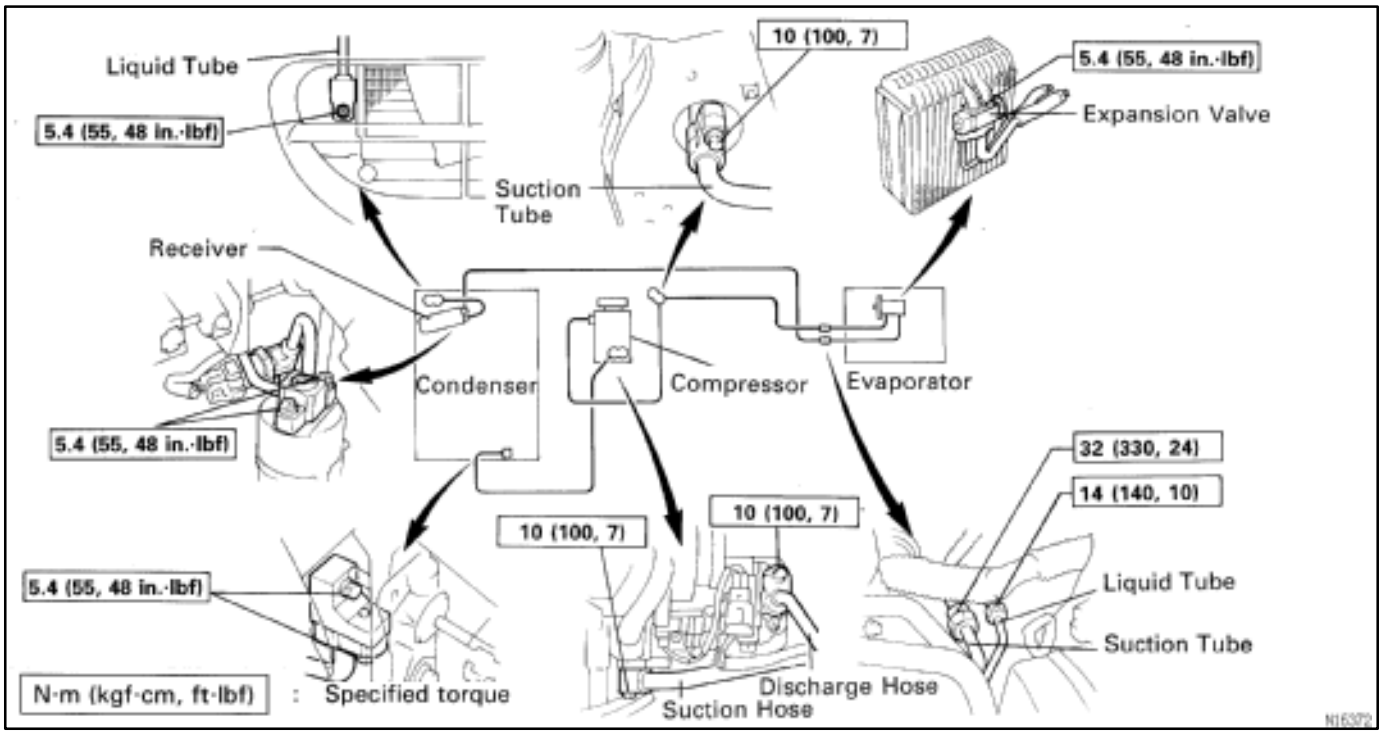

REFRIGERANT LINE

AC1E8–01

ON–VEHICLE INSPECTION

1. INSPECT HOSE AND TUBE CONNECTIONS FOR LOOSENESS

2. INSPECT HOSES AND TUBES FOR LEAKAGE

Using a gas leak detecter, check for leakage of refrigerant.

AC1EA–02

REPLACEMENT

1. DISCHARGE REFRIGERANT FROM REFRIGERATION SYSTEM

2. REPLACE FAULTY TUBE OR HOSE

NOTICE:

Cap the open fittings immediately to keep moisture or dirt out of the system.

3. TIGHTEN JOINT OF BOLT OR NUT AT SPECIFIED TORQUE

NOTICE:

Connections should not be torqued tighter than the specified torqued.

Part tightened	N·m	kgf·cm	ft·lbf
Compressor x Suction hose	10	100	7
Compressor x Discharge hose	10	100	7
Condenser x Discharge hose	5.4	55	48 in.·lbf
Condenser x Liquid tube	5.4	55	48 in.·lbf
Receiver x Liquid tube	5.4	55	48 in.·lbf
Cooling unit x Liquid tube	14	140	10
Cooling unit x Suction tube	32	330	24
Expansion valve x Evaporator	5.4	55	48 in.·lbf
Suction lines Block joint	10	100	7
Piping joint	32	330	24

4. EVACUATE AIR IN REFRIGERATION SYSTEM AND CHARGE WITH REFRIGERANT

Specified amount: 600 ± 50 g (21.16 ± 1.76 oz.)

5. INSPECT FOR LEAKAGE OF REFRIGERANT

Using a gas leak detector, check for leakage of refrigerant.

If there is leakage, check the tightening torque at the joints.

6. INSPECT AIR CONDITIONING OPERATION

TROUBLESHOOTING

PROBLEM SYMPTOMS TABLE

AC1HH–01

Use the table below to help you find the cause of the problem. The numbers indicate the priority of the likely cause of the problem. Check each part in order. If necessary, replace these parts.

Symptom	Suspect Area	See page
No blower operation	1. HTR Fuse	–
	2. Heater main relay	AC–60
	3. Blower motor	AC–55
	4. Blower resistor	AC–56
	5. Blower speed control switch	AC–79
	6. Wire harness	–
No blower control	1. Blower motor	AC–55
	2. Blower resistor	AC–56
	3. Blower speed control switch	AC–79
	4. Wire harness	–
No air temperature	1. Engine coolant volume	–
	2. Heater control assembly	AC–74
No compressor operation	1. Refrigerant volume	AC–3
	2. A.C Fuse	–
	3. Magnetic clutch	AC–42
	4. Compressor lock sensor	AC–42
	5. Compressor	AC–42
	6. Pressure switch	AC–57
	7. Heater main relay	AC–60
	8. Blower speed control switch	AC–79
	9. A/C switch	AC–73
	10. Heater control assembly	AC–79
	11. Thermistor	AC–28
	12. Wire harness	–
No cool air comes out	1. Refrigerant volume	AC–3
	2. Refrigerant pressure	AC–3
	3. Drive belt	AC–16
	4. Magnetic clutch	AC–42
	5. Compressor lock sensor	AC–42
	6. Pressure switch	AC–57
	7. Thermistor	AC–28
	8. A/C switch	AC–73
	9. A/C amplifier	AC–69
	10. Heater control assembly	AC–79
	11. Wire harness	–
Insufficient cooling	1. Refrigerant volume	AC–3
	2. Drive belt	AC–16
	3. Magnetic clutch	AC–42
	4. Compressor	AC–42
	5. Condenser	AC–52
	6. Expansion Valve	AC–24
	7. Evaporator	AC–28
	8. Refrigerant lines	AC–21
	9 Pressure switch	AC–57
	10. A/C amplifier	AC–69
	11. Heater control assembly	AC–79
No engine idle–up when A/C switch ON	1. Heater control assembly	AC–79
	2. Engine (and ECT) ECU	–
	3. Idle control system	–
	4. Wire harness	–

No air inlet control	1. Heater control assembly 2. Wire harness	AC–79 –
No mode control	1. Heater control assembly 2. Wire harness	AC–79 –
Blinking of A/C indicator	1. Compressor 2. Drive belt 3. Compressor lock sensor 4. Heater control assembly	AC–42 AC–16 AC–42 AC–79
Brightness does not change when light control switch is turned	1. Headlight and taillight system 2. Heater control assembly	BE–15 AC–79

AX095–01

OPERATION

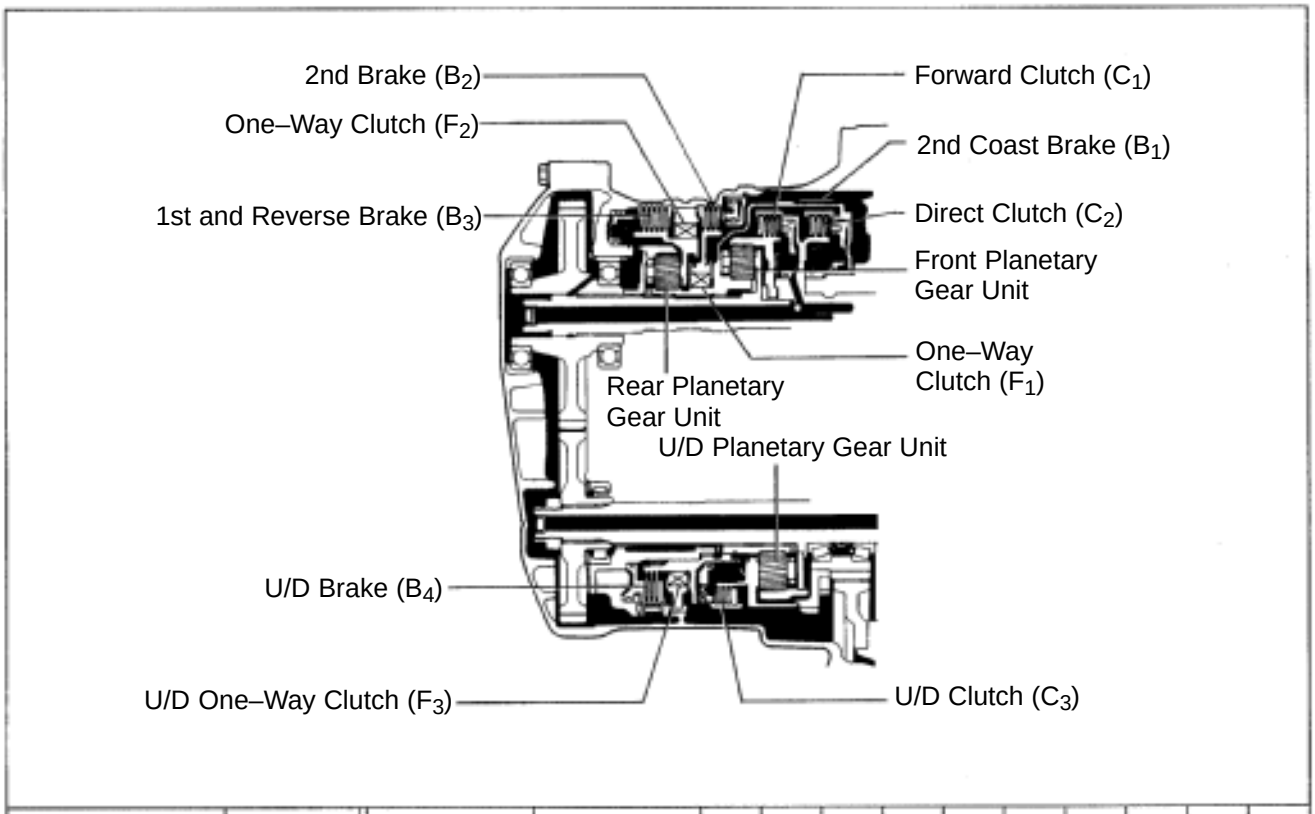

Shift Lever Position	Gear	Shift Solenoid Valve No.1	Shift Solenoid Valve No.2	C_1	C_2	C_3	B_1	B_2	B_3	B_4	F_1	F_2	F_3
P	Park	ON	OFF							●			
R	Reverse	ON	OFF		●				●	●			
N	Neutral	ON	OFF							●			
D	1st	ON	OFF	●						●		●	●
	2nd	ON	ON	●				●		●	●		●
	3rd	OFF	ON	●	●			●		●			●
	O/D	OFF	OFF	●	●	●		●					
2	1st	ON	OFF	●						●		●	●
	2nd	ON	ON	●			●	●		●	●		●
	3rd*	OFF	ON	●	●			●		●			●
L	1st	ON	OFF	●					●	●		●	●
	2nd*	ON	ON	●			●	●		●	●		●

●: Operating
*: Down–Shift only in the 3rd gear for the 2 position and 2nd gear for the L position no up–shift

V07339

AUTOMATIC TRANSAXLE SYSTEM

AX094–01

PRECAUTION

If the vehicle is equipped with a mobile communication system, refer to the precaution in the IN section.

AUTOMATIC TRANSAXLE UNIT

COMPONENTS

AX0QB–01

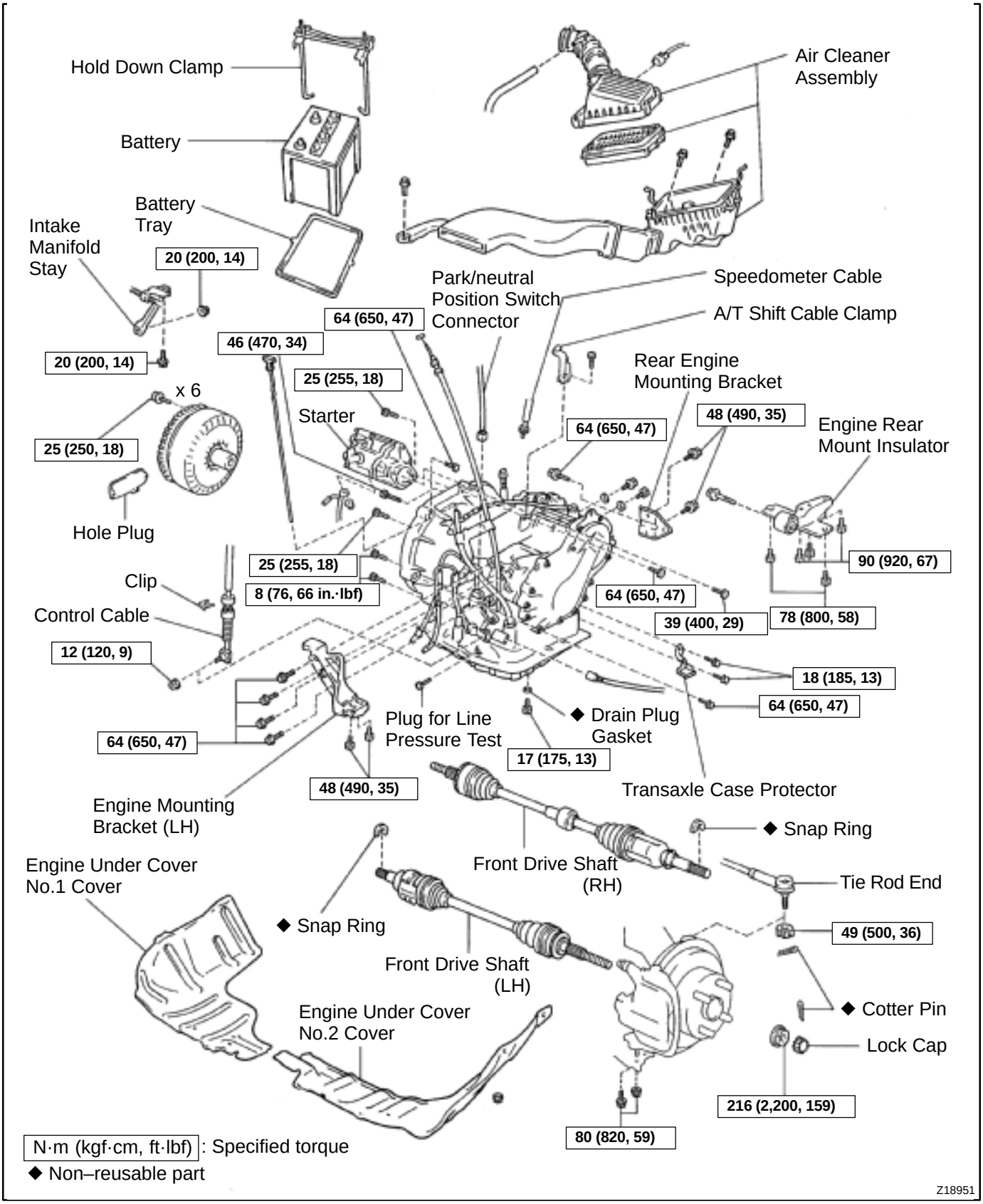

AX09F–02

INSTALLATION

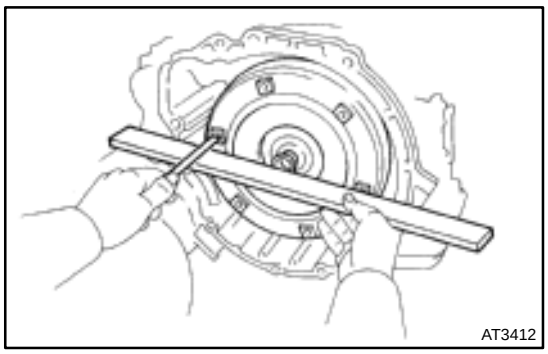
AT3412

1. TORQUE CONVERTER CLUTCH INSTALLATION

Using calipers and a straight edge, measure the distance from the installed surface to the front surface of the transaxle housing.

Correct distance: More than 13.4 mm (0.528 in.)

2. TRANSAXLE INSTALLATION

Installation is in the reverse order of removal (See page AX–17).

HINT:

At the time of installation, please refer to the following items.

- ATF level (See page DI–126).
- Front wheel alignment (See page SA–4).
- Road test the vehicle (See page DI–126).

AX09E–02

REMOVAL

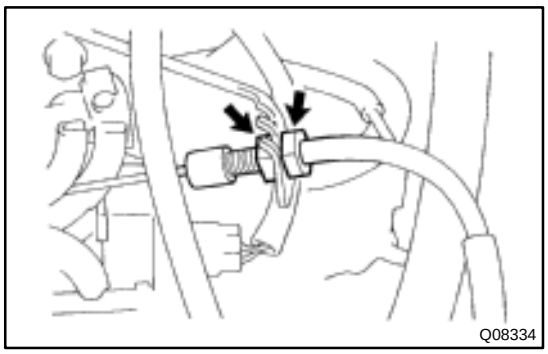
Q08334

1. REMOVE BATTERY
2. REMOVE AIR CLEANER ASSEMBLY
3. REMOVE THROTTLE CABLE FROM ENGINE
4. REMOVE GROUND CABLES, WIRE HARNESS AND THROTTLE CABLE CLAMP BRACKET FROM TRANSAXLE

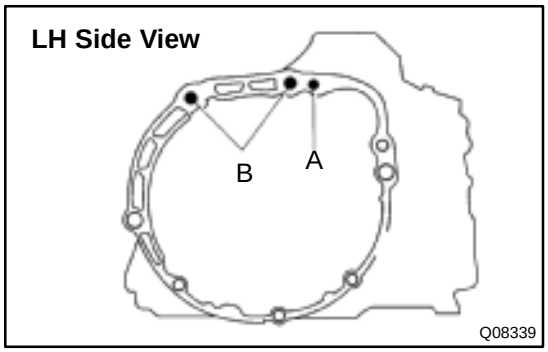

Q08339

5. REMOVE 2 TRANSAXLE UPPER SIDE MOUNTING BOLTS AND STARTER UPPER SIDE MOUNTING BOLT
   Torque:
   A bolt: 39 N·m (400 kgf·cm, 29 ft·lbf)
   B bolt: 64 N·m (650 kgf·cm, 47 ft·lbf)

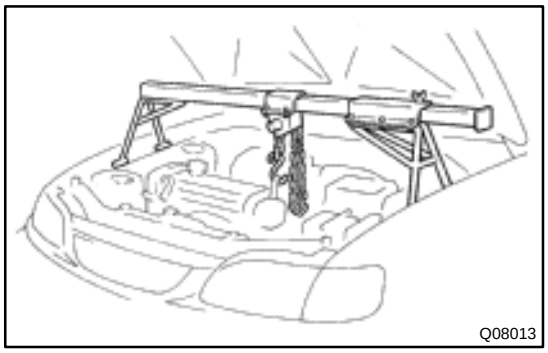
Q08013

6. INSTALL ENGINE SUPPORT FIXTURE
7. JACK UP VEHICLE AND REMOVE FRONT WHEELS
8. REMOVE LH AND RH ENGINE UNDER COVERS
9. REMOVE DRIVE SHAFT (See page SA–18)

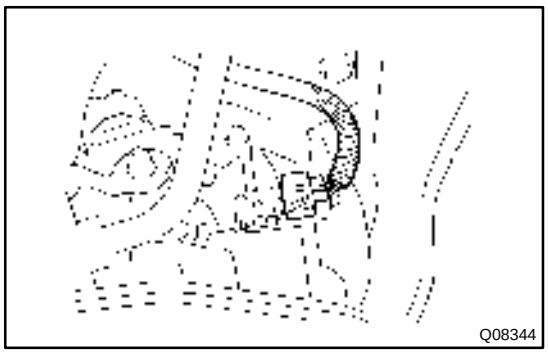
Q08344

10. DISCONNECT SOLENOID CONNECTOR

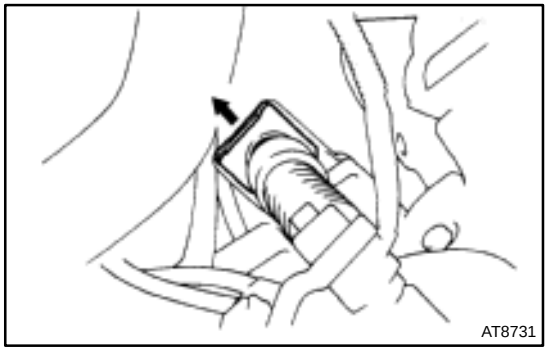
AT8731

11. DISCONNECT CONTROL CABLE

(a) Pull out the clip from the control cable.

(b) Remove the lock nut and disconnect the control cable from the control shaft lever.
   Torque: 12 N·m (120 kgf·cm, 9 ft·lbf)

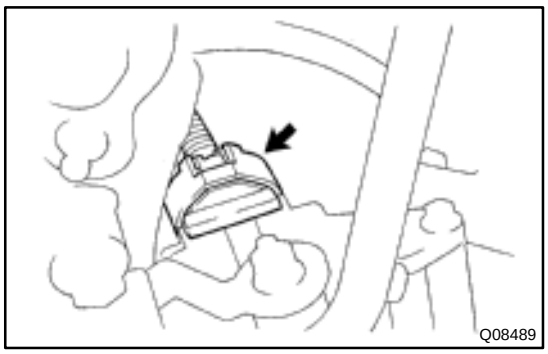

12. DISCONNECT CONNECTOR FROM PARK/NEUTRAL POSITION SWITCH

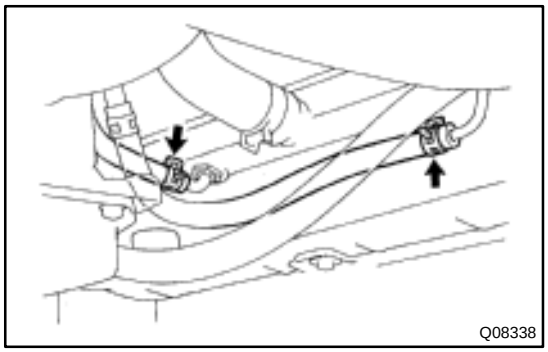

13. DISCONNECT 2 OIL COOLER PIPES

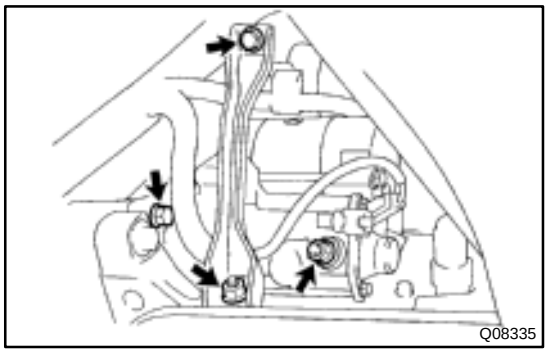

14. REMOVE STARTER

(a) Remove the bolt, nut and intake manifold stay.
Torque: 20 N·m (200 kgf·cm, 15 ft·lbf)

(b) Remove the bolt and nut.
Torque: 39 N·m (400 kgf·cm, 29 ft·lbf)

(c) Disconnect the connector and terminal.

(d) Remove the starter.

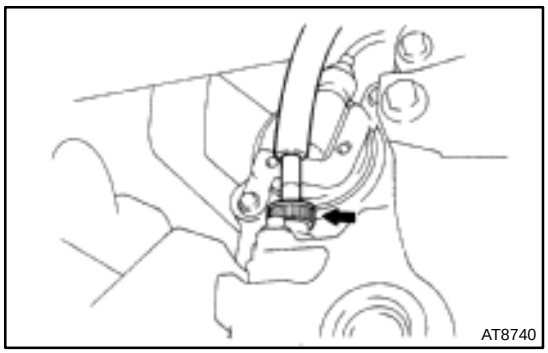

15. REMOVE SPEEDOMETER CABLE

16. DISCONNECT NO.2 VEHICLE SPEED SENSOR CONNECTOR.

17. SECURE STABILIZER BAR
(See page SA–39)

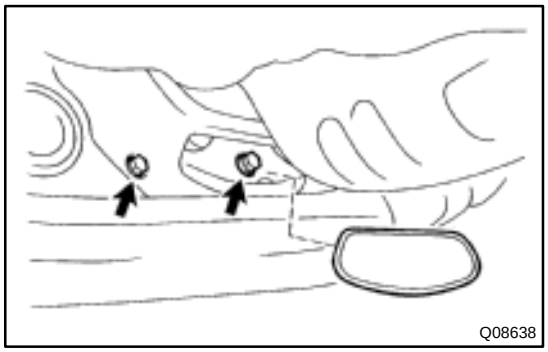

18. REMOVE TORQUE CONVERTER CLUTCH MOUNTING BOLTS

(a) Remove the hole plug.

(b) Turn the crankshaft to gain access and remove the 6 bolts with holding the crankshaft pulley nut by a wrench.
Torque: 18 N·m (185 kgf·cm, 13 ft·lbf)

HINT:
At the time of installation, first, install the gray bolt. Then install 5 black bolts.

19. SUPPORT TRANSAXLE

Support the transaxle with a jack.

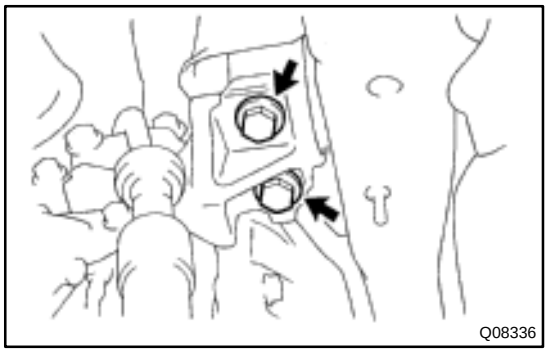

20. REMOVE 2 BOLTS FROM ENGINE MOUNTING LEFT SIDE BRACKET

Torque: 48 N·m (490 kgf·cm, 35 ft·lbf)

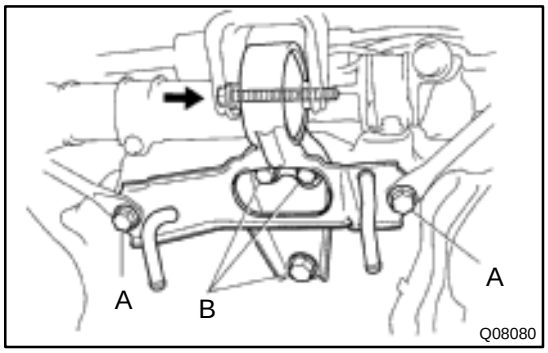

21. REMOVE BOLT FROM REAR ENGINE MIUNTING BRACKET

Torque: 64 N·m (650 kgf·cm, 47 ft·lbf)

22. REMOVE ENGINE REAR MOUNT INSULATOR

Remove the 5 bolts.

Torque:

A Bolt: 78 N·m (800 kgf·cm, 58 ft·lbf)

B Bolt: 90 N·m (920 kgf·cm, 67 ft·lbf)

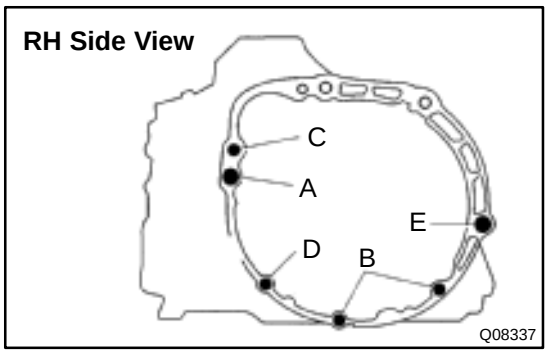

23. REMOVE TRANSAXLE

Remove the 6 bolts and transaxle.

Torque:

A bolt: 46 N·m (470 kgf·cm, 34 ft·lbf)

B bolt: 8.0 N·m (76 kgf·cm, 66 in·lbf)

C bolt: 39 N·m (400 kgf·cm, 29 ft·lbf)

D bolt: 25 N·m (255 kgf·cm, 18 ft·lbf)

E bolt: 64 N·m (650 kgf·cm, 47 ft·lbf)

DIFFERENTIAL OIL SEAL

AX099–02

ON–VEHICLE REPAIR

1. **DRAIN ATF**
2. **REMOVE ENGINE UNDER COVER**
3. **REMOVE LH AND RH DRIVE SHAFTS**
   (See page SA–18)

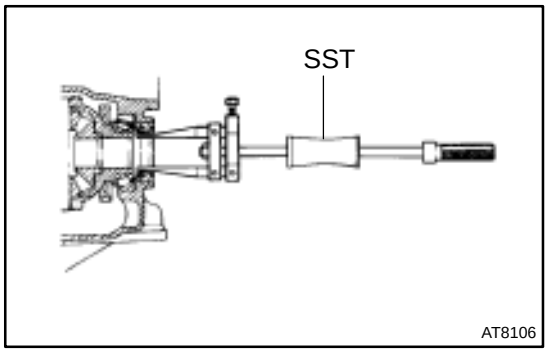

4. **REMOVE SIDE OIL SEAL**

Using SST, drive out the oil seals on both sides.

SST 09308–00010

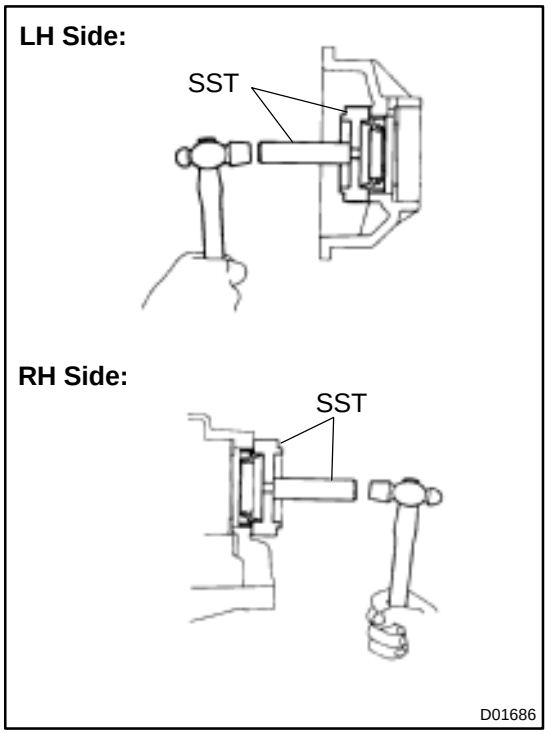

5. **INSTALL SIDE OIL SEALS**

(a) Using SST and a hammer, drive in a new oil seal until its surface is flush with the case surface.

SST 09350–32014 (09351–32130, 09351–32150)

Oil seal drive in depth:

LH side: 5.3 ± 0.5 mm (0.209 ± 0.020 in.)

RH side: 3.1 ± 0.5 mm (0.122 ± 0.020 in.)

(b) Coat the oil seal lip with MP grease.

6. **INSTALL LH AND RH DRIVE SHAFTS**
   (See page SA–23)
7. **INSTALL ENGINE UNDER COVER**
8. **FILL AND CHECK FLUID LEVEL**
   (See page DI–126)

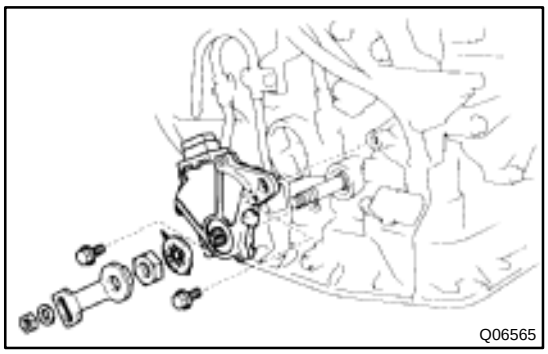

PARK/NEUTRAL POSITION (PNP) SWITCH

AX096–02

ON–VEHICLE REPAIR

1. DISCONNECT PARK/NEUTRAL POSITION SWITCH CONNECTOR

2. REMOVE PARK/NEUTRAL POSITION SWITCH

(a) Remove the nut and disconnect control cable.
(b) Using a screwdriver, pry off the nut stopper.
(c) Remove the nut and stopper.
(d) Remove the 2 bolts and park/neutral position switch.

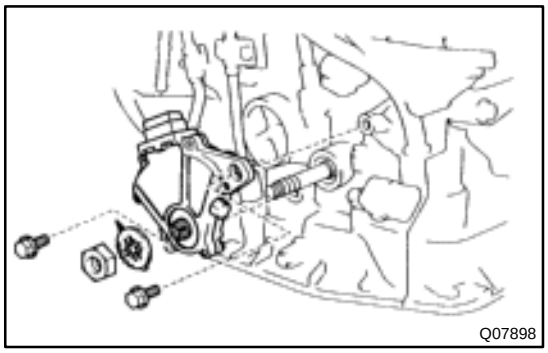

3. INSTALL AND ADJUST PARK/NEUTRAL POSITION SWITCH

(a) Temporarily install the park/neutral position switch with the 2 bolts.
(b) Install the nut and stopper.
Torque: 6.9 N·m (70 kgf·cm, 61 in.·lbf)
(c) Stake the nut with stopper.

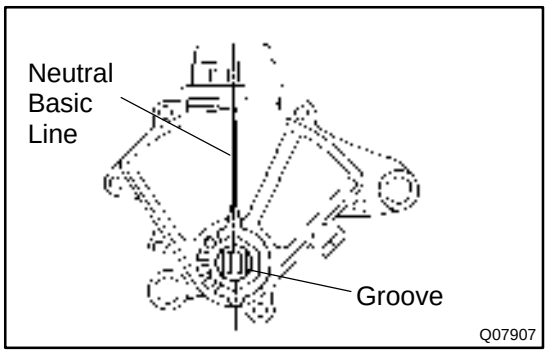

(d) Adjust the park/neutral position switch (See page DI–126).

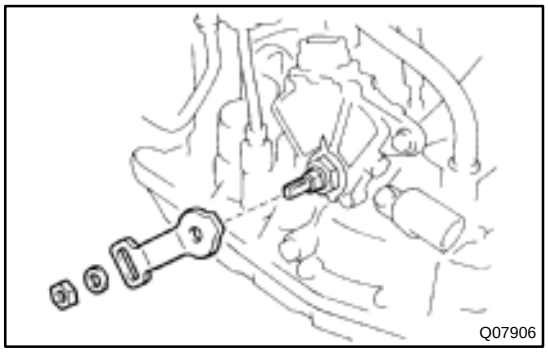

(e) Install the transaxle control shaft lever.
(f) Install the control cable to the control shaft lever with the nut.
Torque: 15 N·m (150 kgf·cm, 11 ft.·lbf)

4. CONNECT PARK/NEUTRAL POSITION SWITCH CONNECTOR

SPEEDOMETER DRIVEN GEAR OIL SEAL

AX09A–01

ON–VEHICLE REPAIR

1. REMOVE AIR CLEANER ASSEMBLY

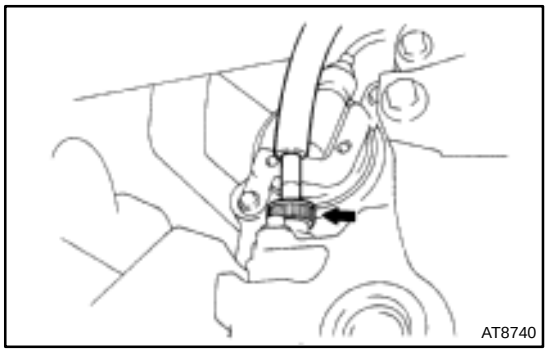

2. DISCONNECT SPEEDOMETER CABLE

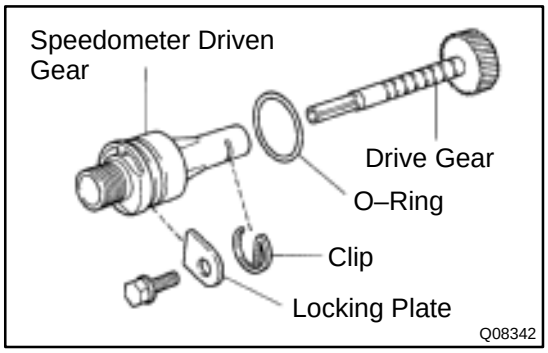

3. REMOVE SPEEDOMETER DRIVEN GEAR ASSEMBLY

(a) Remove the bolt and speedometer driven gear assembly.
(b) Pry out the locking plate from speedometer driven gear assembly.
(c) Remove the clip and speedometer driven gear.
(d) Remove the O–ring from speedometer driven gear.

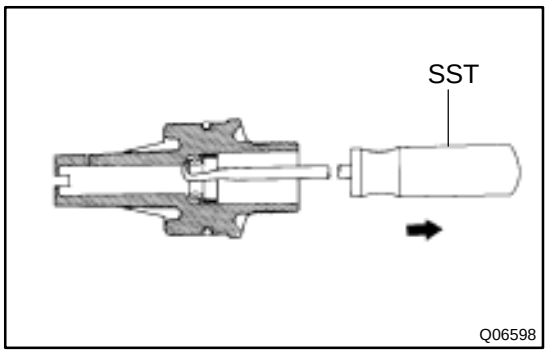

4. REMOVE SPEEDOMETER DRIVEN GEAR OIL SEAL

Using SST, pull out the oil seal.

SST 09921–00010

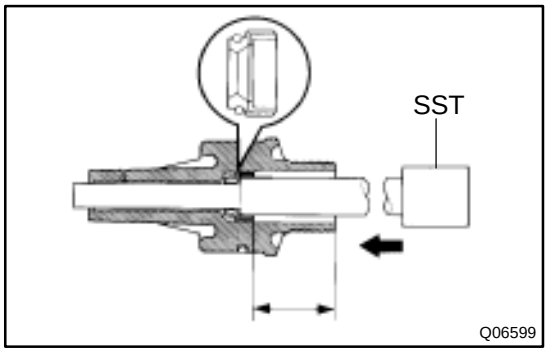

5. INSTALL SPEEDOMETER DRIVEN GEAR OIL SEAL

Using SST, install a new oil seal.

SST 09201–10000 (09201–01080)

Driven in depth: 25 mm (0.98 in.)

6. INSTALL SPEEDOMETER DRIVEN GEAR ASSEMBLY

(a) Coat a new O–ring with ATF and install it to the speedometer driven gear.
(b) Install the clip and speedometer driven gear.

(c) Install the locking plate and speedometer driven gear assembly with bolt.
Torque: 16 N·m (160 kgf·cm, 12 ft·lbf)

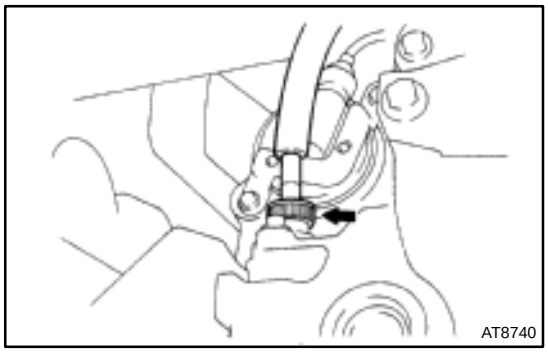

7. CONNECT SPEEDOMETER CABLE
8. INSTALL AIR CLEANER ASSEMBLY

SHIFT LOCK SYSTEM

AX0QA–01

COMPONENTS

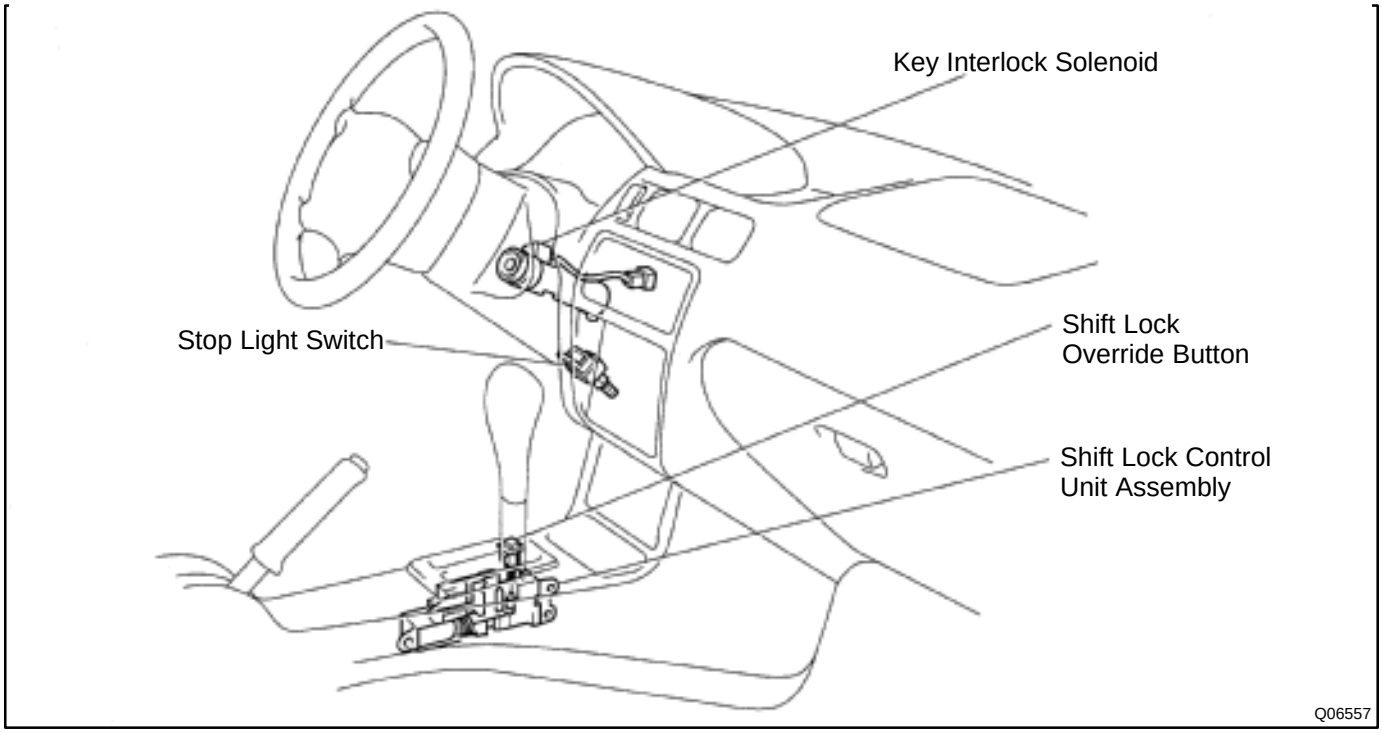

WIRING DIAGRAM

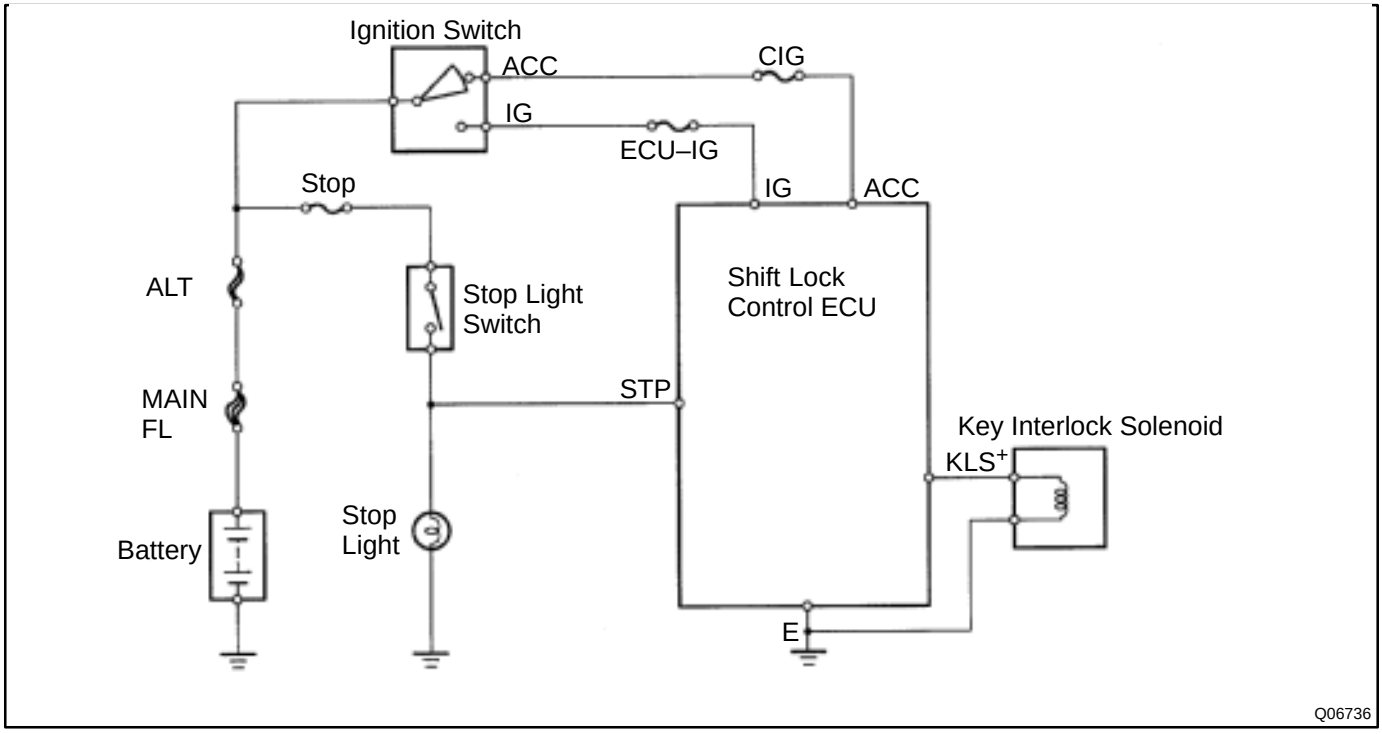

AX09C–01

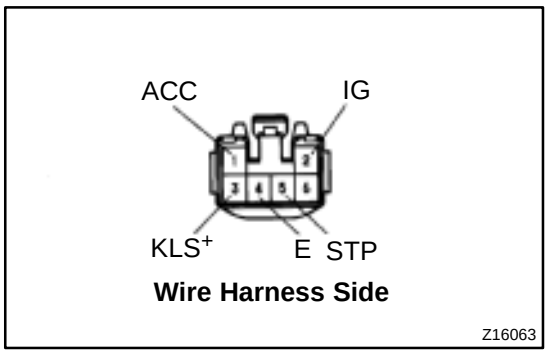

INSPECTION

1. INSPECT SHIFT LOCK CONTROL ECM

Using a voltmeter, measure the voltage at each terminal.

HINT:

Do not disconnect the ECU connector.

Terminal	Measuring Condition	Voltage (V)
ACC – E	Ignition switch ACC	10 – 14
IG – E	Ignition switch ON	10 – 14
STP – E	Depress brake pedal	10 – 14
KLS^+ – E	1 Ignition switch ACC and P position 2 Ignition switch ACC and except P position 3(After – approx. 1 second)	0 7 – 12 6 – 9

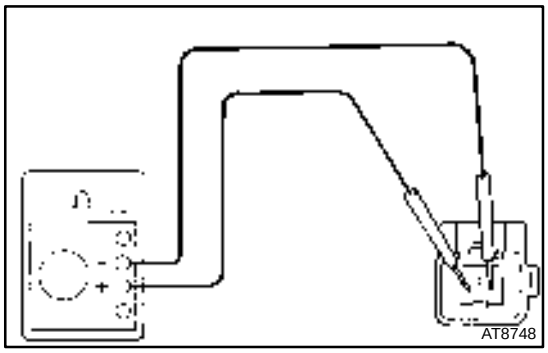

2. INSPECT KEY INTERLOCK SOLENOID

(a) Disconnect the solenoid connector.

(b) Using an ohmmeter, measure the resistance between the terminals.

Standard resistance: 12.5 – 16.5 Ω

If the resistance is not as specified, replace the solenoid.

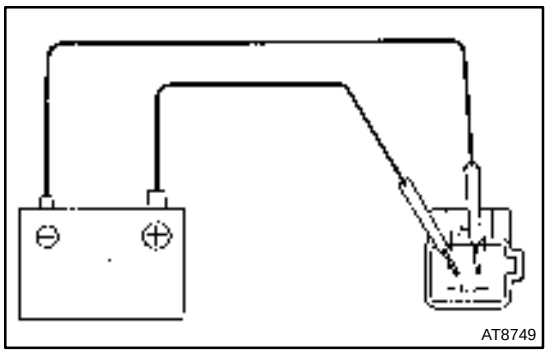

(c) Apply battery positive voltage between terminals. Check that the solenoid operation sound is heard.

If the operation is not as specified, replace the solenoid.

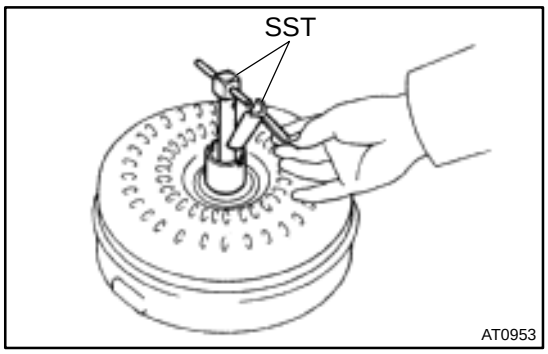

TORQUE CONVERTER CLUTCH AND DRIVE PLATE

AX09G–01

INSPECTION

1. INSPECT ONE–WAY CLUTCH

(a) Install SST in the inner race of one–way clutch.
SST 09350–30020 (09351–32010)

(b) Install SST so that it fits in the notch of the converter hub and outer race of the one–way clutch.
SST 09350–30020 (09351–32020)

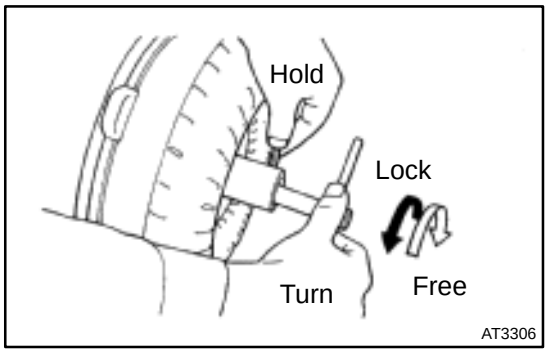

(c) With the torque converter clutch held upright, inspect the clutch locks when turned counterclockwise, and rotates freely and smoothly clockwise.

If necessary, clean the converter clutch and retest the clutch.

(d) Replace the converter clutch if the clutch still fails the test.

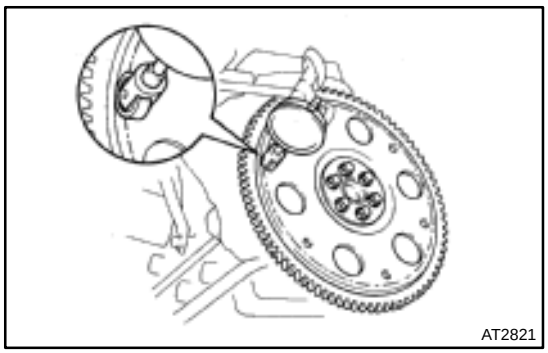

2. MEASURE DRIVE PLATE RUNOUT AND INSPECT RING GEAR

Set up a dial indicator and measure the drive plate runout.

Maximum runout: 0.20 mm (0.0079 in.)

If the runout is not within the specification, replace the drive plate.

Torque: 83 N·m (850 kgf·cm, 61 ft·lbf)

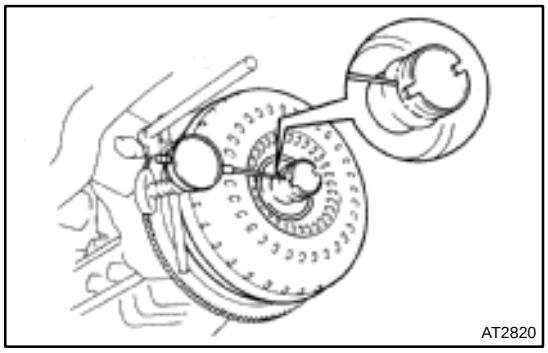

3. MEASURE TORQUE CONVERTER CLUTCH SLEEVE RUNOUT

(a) Temporarily, connect the torque converter clutch to the drive plate. Set up a dial indicator and measure the torque converter clutch runout.

Maximum runout: 0.30 mm (0.0018 in.)

If the runout is not within the specification, try to reorient the installation of the converter correctly.

(b) Remove the torque converter clutch.

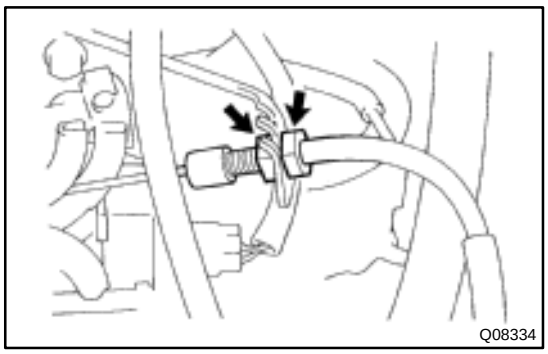

THROTTLE CABLE

AX098–01

ON–VEHICLE REPAIR

1. DISCONNECT THROTTLE CABLE FROM THROTTLE LINKAGE

2. REMOVE PARK/NEUTRAL POSITION SWITCH (See page AX–4)

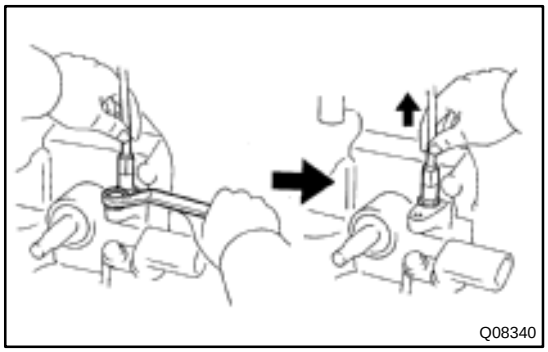

3. REMOVE THROTTLE CABLE RETAINING PLATE

Remove the bolt and plate.

4. REMOVE THROTTLE CABLE FROM VALVE BODY (See page AX–5)

5. REMOVE THROTTLE CABLE FROM CASE

Pull out the throttle cable.

6. INSTALL THROTTLE CABLE TO CASE

7. INSTALL THROTTLE CABLE TO VALVE BODY (See page AX–5)

8. INSTALL THROTTLE CABLE RETAINING PLATE

Install the bolt and plate.

9. INSTALL PARK/NEUTRAL POSITION SWITCH (See page AX–4)

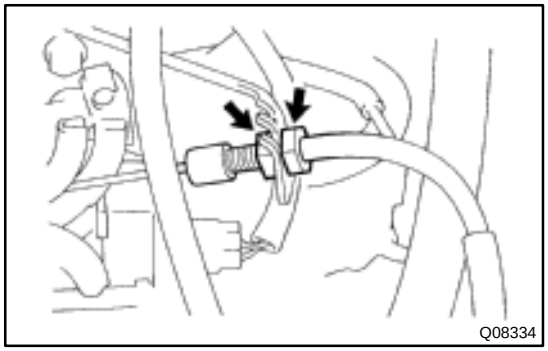

10. CONNECT THROTTLE CABLE TO THROTTLE LINKAGE

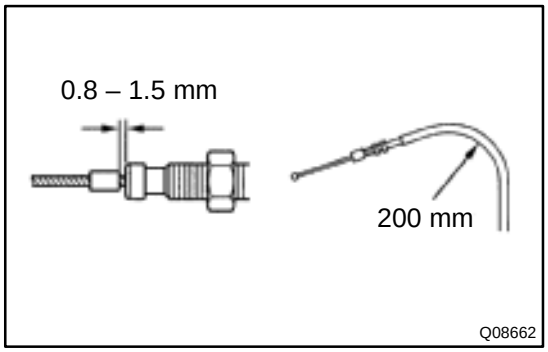

11. IF THROTTLE CABLE IS NEW, STAKE THE STOPPER ON INNER CABLE

HINT:

New cable does not have a cable stopper staked.

(a) Bend the cable so there is a radius of about 200 mm (7.87 in.).

(b) Pull the inner cable lightly until a slight resistance is felt, and hold it.

(c) Stake the stopper so that the distance from the end of outer cable to the stopper is 0.8 – 1.5 mm (0.031 – 0.059 in.).

VALVE BODY ASSEMBLY

AX097–02

ON–VEHICLE REPAIR

CAUTION:

- **When working with FIPG material, you must be observe the following.**
- **Using a razor blade and gasket scraper, remove all the old FIPG material from the gasket surfaces.**
- **Thoroughly clean all components to remove all the loose material.**
- **Clean both sealing surfaces with a non–residue solvent.**
- **Apply FIPG in approx. 1 mm (0.04 in.) bead along the sealing surface.**
- **Parts must be assembly within 10 minutes of application. Otherwise, the FIPG material must be removed and reapplied.**

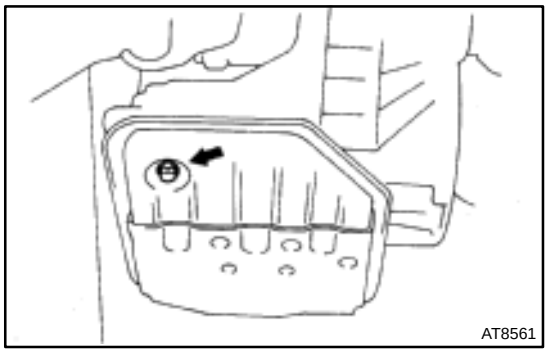
AT8561

1. DRAIN ATF

Remove the drain plug and gasket, and drain ATF into a suitable container.

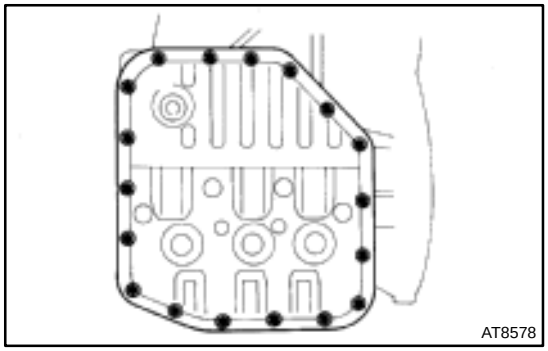
AT8578

2. REMOVE OIL PAN AND GASKET

Remove the 18 bolts, and carefully remove the oil pan assembly discarding the gasket.

NOTICE:

Some fluid will remain in the oil pan.

3. EXAMINE PARTICLES IN PAN

Remove the magnets and use them to collect any steel chips. Look at the chips and particles in the pan and on the magnet carefully to anticipate what type of wear you will find in the transaxle.

Steel (magnetic): bearing, gear and plate wear

Brass (non–magnetic): bushing wear

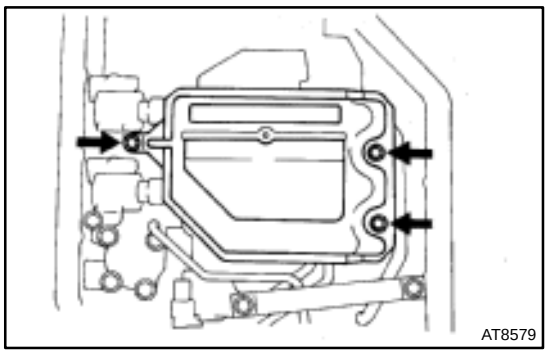

4. REMOVE OIL STRAINER

(a) Remove the 3 bolts and oil strainer.

NOTICE:

Be careful as some oil will come out with the strainer.

(b) Remove the gasket from the oil strainer.

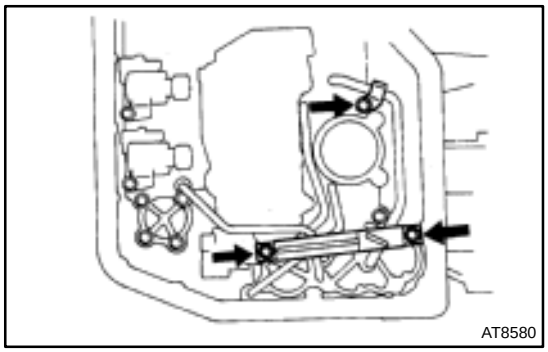

5. REMOVE OIL PIPE BRACKET AND OIL PIPE CLAMP

(a) Remove the 2 bolts and oil pipe bracket.

(b) Remove the bolt and oil pipe clamp.

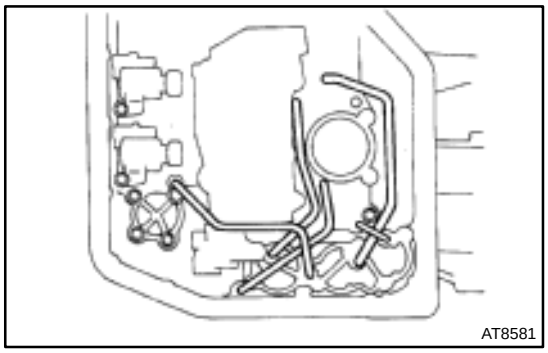

6. REMOVE OIL PIPE

Pry up the both pipe ends with a large screwdriver and remove the 5 pipes.

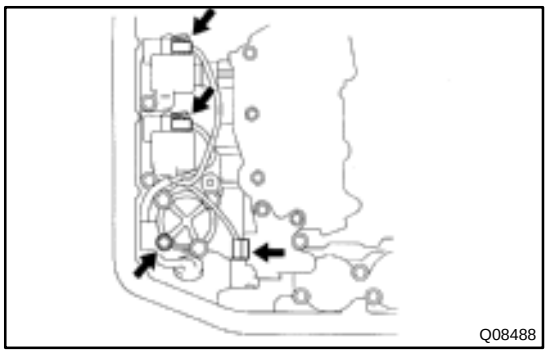

7. DISCONNECT 3 SOLENOID CONNECTORS

8. REMOVE SOLENOID WIRE ASSEMBLY CLAMP

Remove the bolt and clamp.

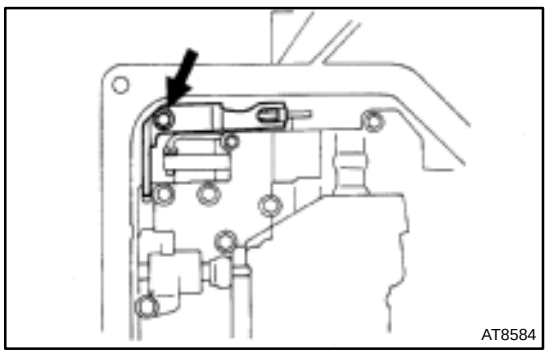

9. REMOVE MANUAL DETENT SPRING

Remove the bolt and manual detent spring.

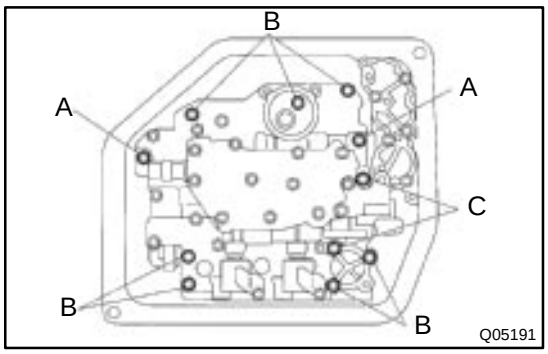

10. REMOVE VALVE BODY

(a) Remove the 11 bolts.

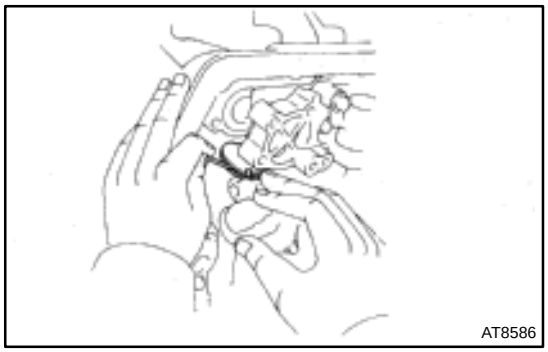

(b) Disconnect the throttle cable.

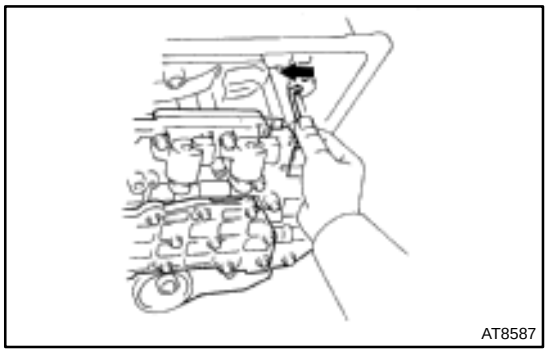

(c) Remove the manual valve connecting rod.

(d) Remove the valve body.

11. INSTALL VALVE BODY

(a) Install the valve body.

NOTICE:

Be careful not to entangle the solenoid wire.

(b) Install the manual valve connecting rod.

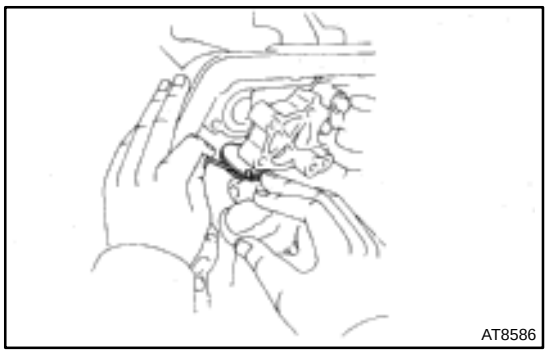

(c) Connect the throttle cable.

NOTICE:

Be careful not to entangle the solenoid wire.

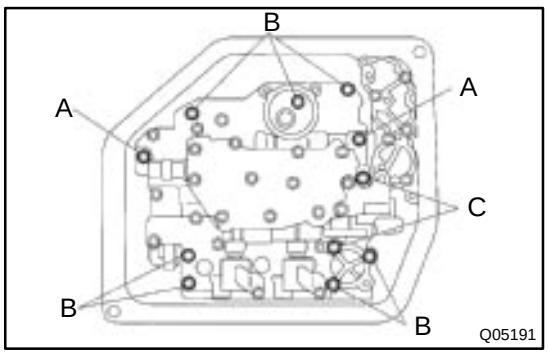

(d) Install the 11 bolts.

Bolt length:

A bolt: 20 mm (0.79 in.)

B bolt: 30 mm (1.18 in.)

C bolt: 47 mm (1.85 in.)

Torque: 10 N·m (100 kgf·cm, 7 ft·lbf)

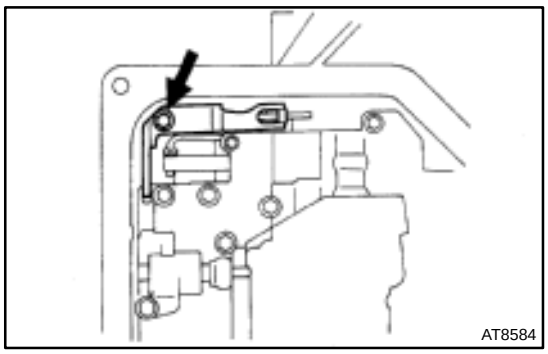

12. INSTALL MANUAL DETENT SPRING

Install the bolt and manual detent spring.

Torque: 10 N·m (100 kgf·cm, 7 ft·lbf)

HINT:

Check that the manual valve lever is in contact with the center of the roller at the tip of the detent spring.

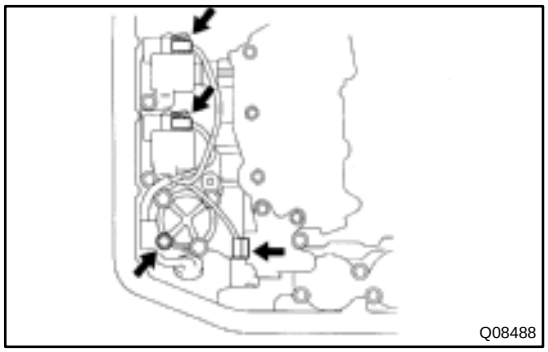

13. INSTALL SOLENOID WIRE ASSEMBLY CLAMP

Install the bolt and clamp.

Torque: 10 N·m (100 kgf·cm, 7 ft·lbf)

14. CONNECT 3 SOLENOID CONNECTORS

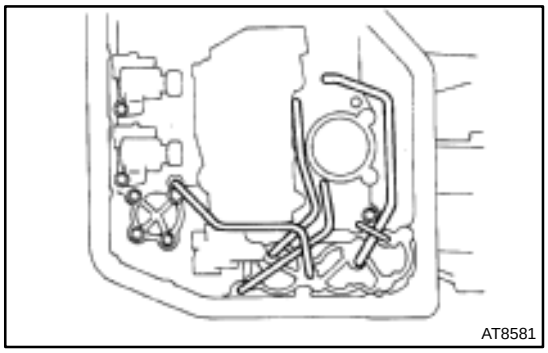

15. INSTALL OIL PIPE

Install the 5 pipes.

NOTICE:

Be careful not to bend or damage the pipe.

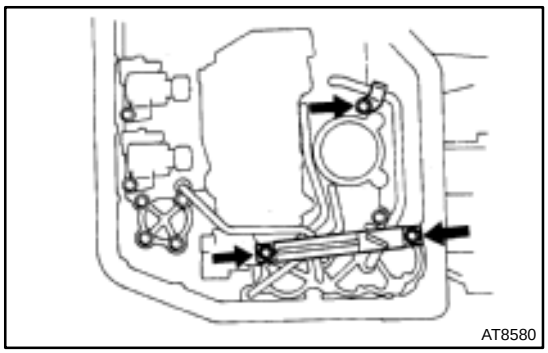

16. INSTALL OIL PIPE BRACKET AND OIL PIPE CLAMP

(a) Install the bolt and oil pipe clamp.

Torque: 10 N·m (100 kgf·cm, 7 ft·lbf)

(b) Install the 2 bolts and oil pipe bracket.

Torque: 10 N·m (100 kgf·cm, 7 ft·lbf)

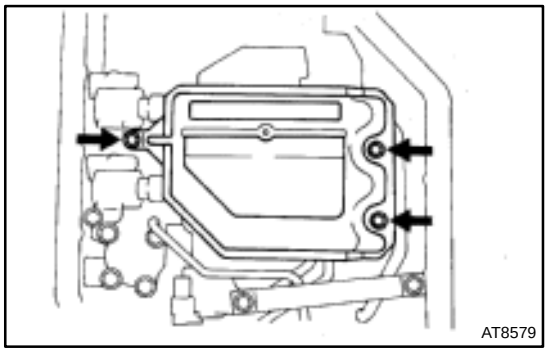

17. INSTALL OIL STRAINER

(a) Install the new gasket to the oil strainer.

(b) Install the 3 bolts and oil strainer.

Torque: 10 N·m (100 kgf·cm, 7 ft·lbf)

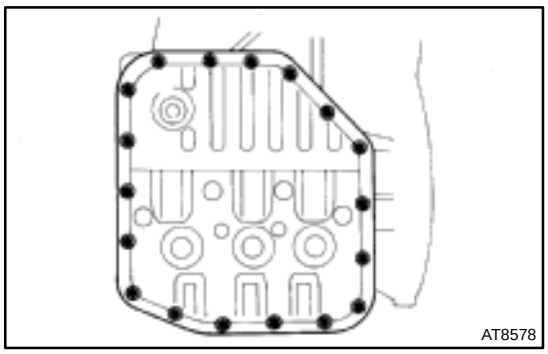

18. INSTALL OIL PAN AND GASKET

(a) Install the 2 magnets to oil pan.

NOTICE:

Make sure that the magnet does not interfere with the oil pipes.

(b) Install the new gasket to the oil pan assembly with the 18 bolts.

Torque: 4.9 N·m (50 kgf·cm, 43 ft·lbf)

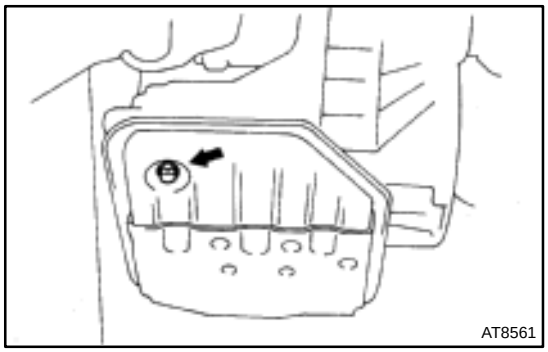

19. ADD ATF

Install the drain plug and a new gasket.

Torque: 17 N·m (175 kgf·cm, 13 ft·lbf)

HINT:

After installation, fill ATF and check fluid level (See page DI–126).

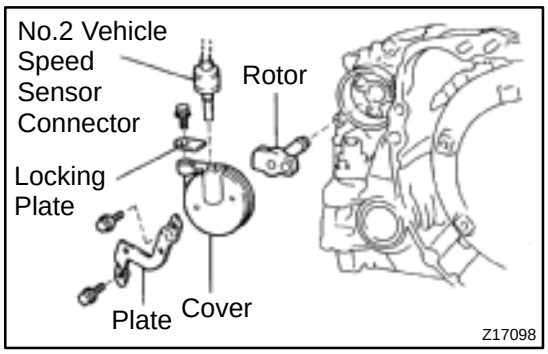

VEHICLE SPEED SENSOR

AX09H–02

ON–VEHICLE REPAIR

1. REMOVE NO.2 VEHICLE SPEED SENSOR

(a) Disconnect the No.2 vehicle speed sensor connector.
(b) Remove the bolt and locking plate.
(c) Pull out the No.2 vehicle speed sensor.
(d) Remove the 2 bolts, plate and cover.
(e) Pull out the rotor.

2. INSTALL NO.2 VEHICLE SPEED SENSOR

(a) Install the rotor.
(b) Install the cover, plate and 2 bolts.
Torque: 5.4 N·m (55 kgf·cm, 48 in.·lbf)
(c) Install the No.2 vehicl speed sensor.
(d) Install the locking plate and bolt.
Torque: 5.4 N·m (55 kgf·cm, 48 in.·lbf)
(e) Install the No.2 vehicle speed sensor connector.

AUDIO SYSTEM

BE0QL–01

DESCRIPTION

1. RADIO WAVE BAND

The radio wave bands used in radio broadcasting are as follows:

Frequency	30 kHz	300 kHz	3 MHz	30 MHz	300 MHz
Designation	LF	MF	HF	VHF	
Radio wave		AM ⟷		FM ⟷	
Modulation method	Amplitude modulation			Frequency modulation	

LF: Low frequency MF: Medium Frequency HF: High Frequency VHF: Very High Frequency

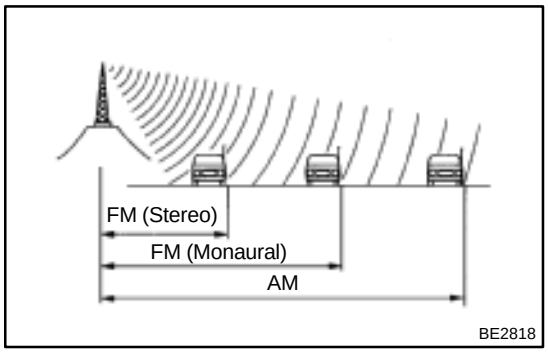

2. SERVICE AREA

There are great differences in the size of the service area for AM and FM monaural. Sometimes FM stereo broadcasts cannot be received even through AM comes in very clearly.
Not only does FM stereo have the smallest service area, but it also picks up static and other types of interference (”noise”) easily.

3. RECEPTION PROBLEMS

Besides the problem of static, there are also the problems called ”fading”, ”multipath” and ”fade out”. These problems are caused not by electrical noise but by the nature of the radio waves themselves.

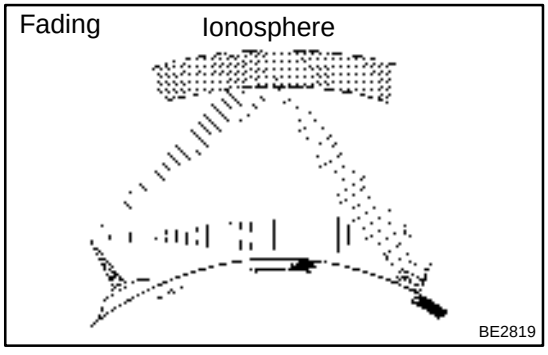

- Fading
  Besides electrical interference, AM broadcasts are also susceptible to other types of interference, especially at night. This is because AM radio waves bounce off the ionosphere at night. These radio waves then interfere with the signals from the same transmitter that reach the vehicle’s antenna directly. This type of interference is called ”fading”.

Multipath



BE2820

- Multipath
  One type of interference caused by bouncing of radio waves off obstructions is called ”multipath”. Multipath occurs when a signal from the broadcast transmitter antenna bounces off buildings and mountains and interferes with the signal that is received directly.

Fade Out



BE2821

- Fade Out
  Because FM radio waves are of higher frequencies than AM radio waves, they bounce off buildings, mountains, and other obstructions. For this reason, FM signals often seem to gradually disappear or fade away as the vehicle goes behind a building or other obstructions. This is called ”fade out”.

Example :

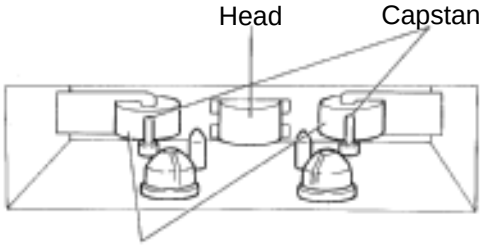

N17398

4. Tape Player/Head Cleaning:
MAINTENANCE

(a) Raise the cassette door with your finger.
Next, using a pencil or similar object, push in the guide.

(b) Using a cleaning pen or cotton applicator soaked in cleaner, clean the head surface, pinch rollers and capstans.



BE4331

5. CD Player/Disc Cleaning:
MAINTENANCE

If the disc gets dirty, clean the disc by wiping the surface from the center to outside in the radial directions with a soft cloth.

NOTICE:

Do not use a conventional record cleaner or anti–static preservative.

BE0QN–01

LOCATION

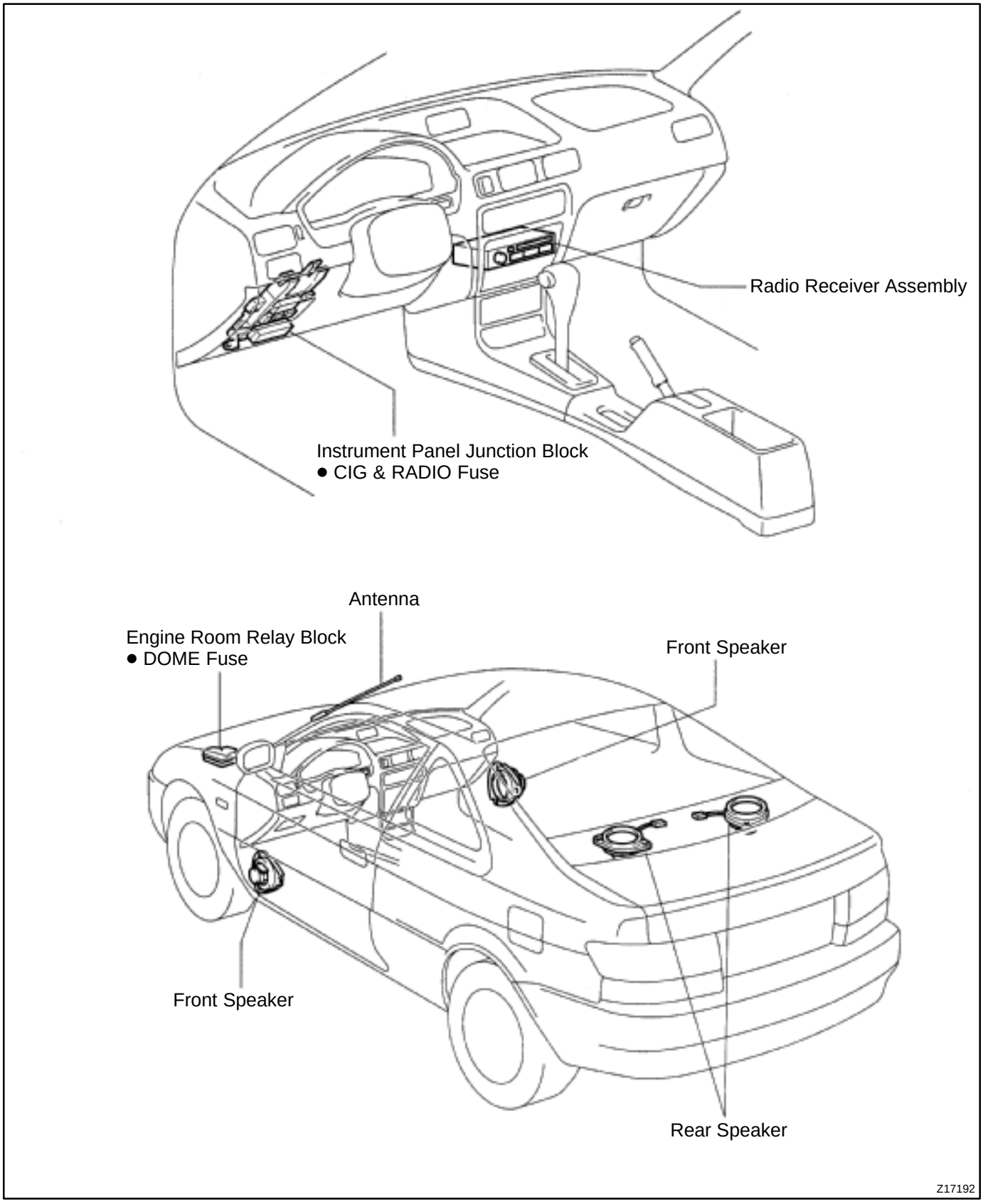

BE1LB–01

TROUBLESHOOTING

NOTICE:

When replacing the internal mechanism (computer part) of the audio system, be careful that no part of your body or clothing comes in contact with the terminals of the leads from the IC, etc. of the replacement part (spare part).

HINT:

This inspection procedure is a simple troubleshooting which should be carried out on the vehicle during system operation and is prepared on the assumption of system component troubles (except for the wires and connectors, etc.).

Always inspect the trouble taking the following items into consideration.

- Open or short circuit of the wire harness
- Connector or terminal connection fault

	Problem	No.
Radio	No power coming in.	1
	Power coming in, but radio not operating.	2
	Noise present, but AM – FM not operating.	3
	Either speaker does not work.	4
	Either AM or FM does not work.	5
	Reception poor (Volume faint).	5
	Few preset tuning bands.	5
	Sound quality poor.	6
	Cannot set station select button.	7
	Preset memory disappears.	7
Tape Player	Cassette tape cannot be inserted.	8
	Cassette tape inserts, but no power.	9
	Power coming in, but tape player not operating.	10
	Either speaker does not work.	11
	Sound quality poor (Volume faint).	12
	Tape jammed, malfunction with tape speed or auto–reverse.	13
	APS, SKIP, RPT buttons not operating.	14
	Cassette tape will not eject.	15
Antenna	Antenna – related.	16
Noise	Noise produced by vibration or shock while driving.	17
	Noise produced when engine starts.	18

The term ”AM” includes LW, MW and the term ”FM” includes UKW.

HOW TO USE DIAGNOSTIC CHART

Reference:

1	Radio	NO POWER COMING IN

① - R : Radio S : Tape Player (Separate) U : Radio – Tape Player Unit

② - S U R

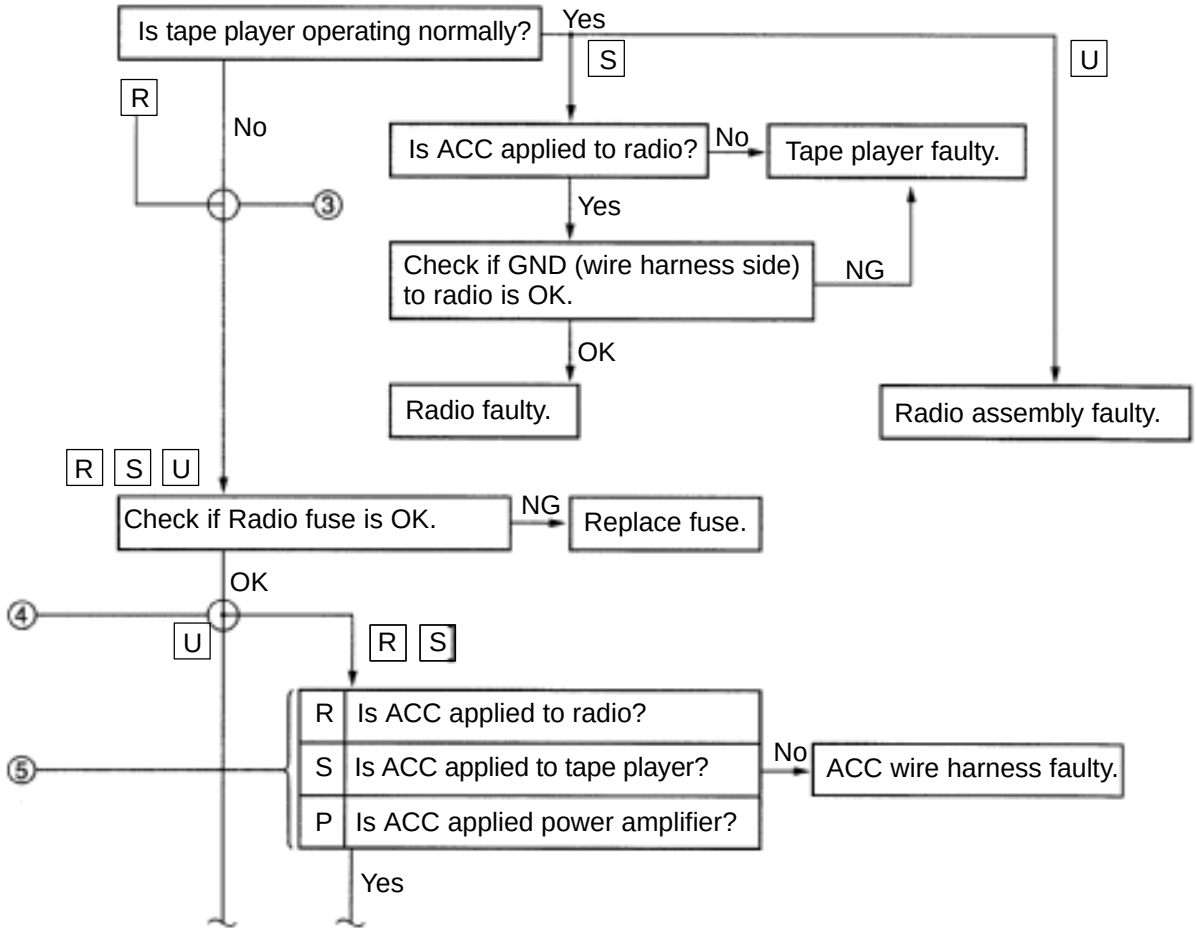

① Audio system type and symbol used.
HINT : Confirm the applicable type of audio system.

② Symbol for type of audio system the question applies to.
HINT : If the audio system type is not applicable, proceed to next question below.

③ Junction without black circle.
HINT : Proceed to next question below.

④ Junction with black circle.
HINT : Proceed to question for applicable audio system type.

⑤ HINT : Select question for applicable audio system type.

V08170

1	Radio	NO POWER COMING IN

[R] : Radio [U] : Radio – Tape Player Unit

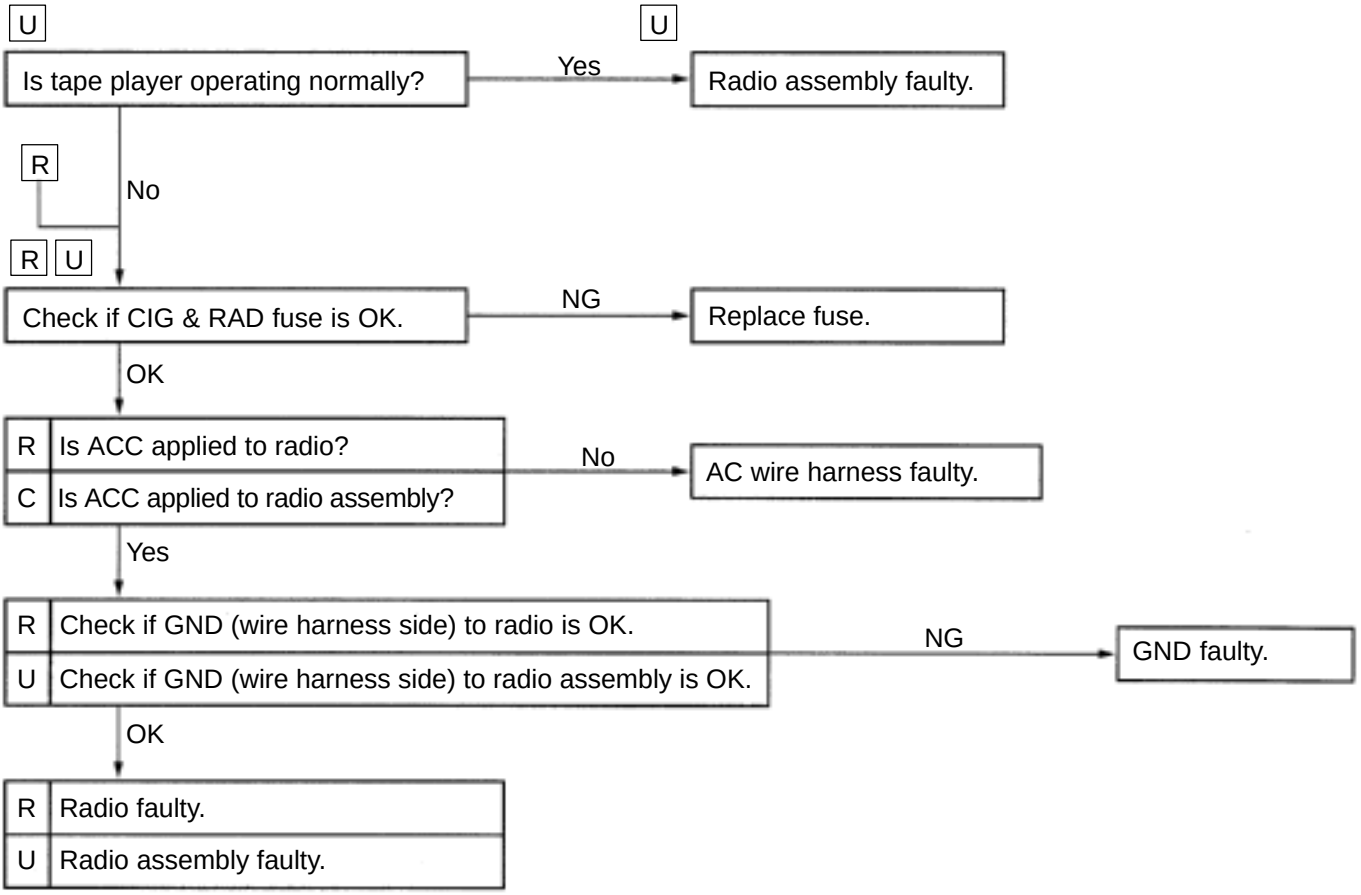

V08171

2 Radio — POWER COMING IN, BUT RADIO NOT OPERATING

R : Radio U : Radio – Tape Player Unit

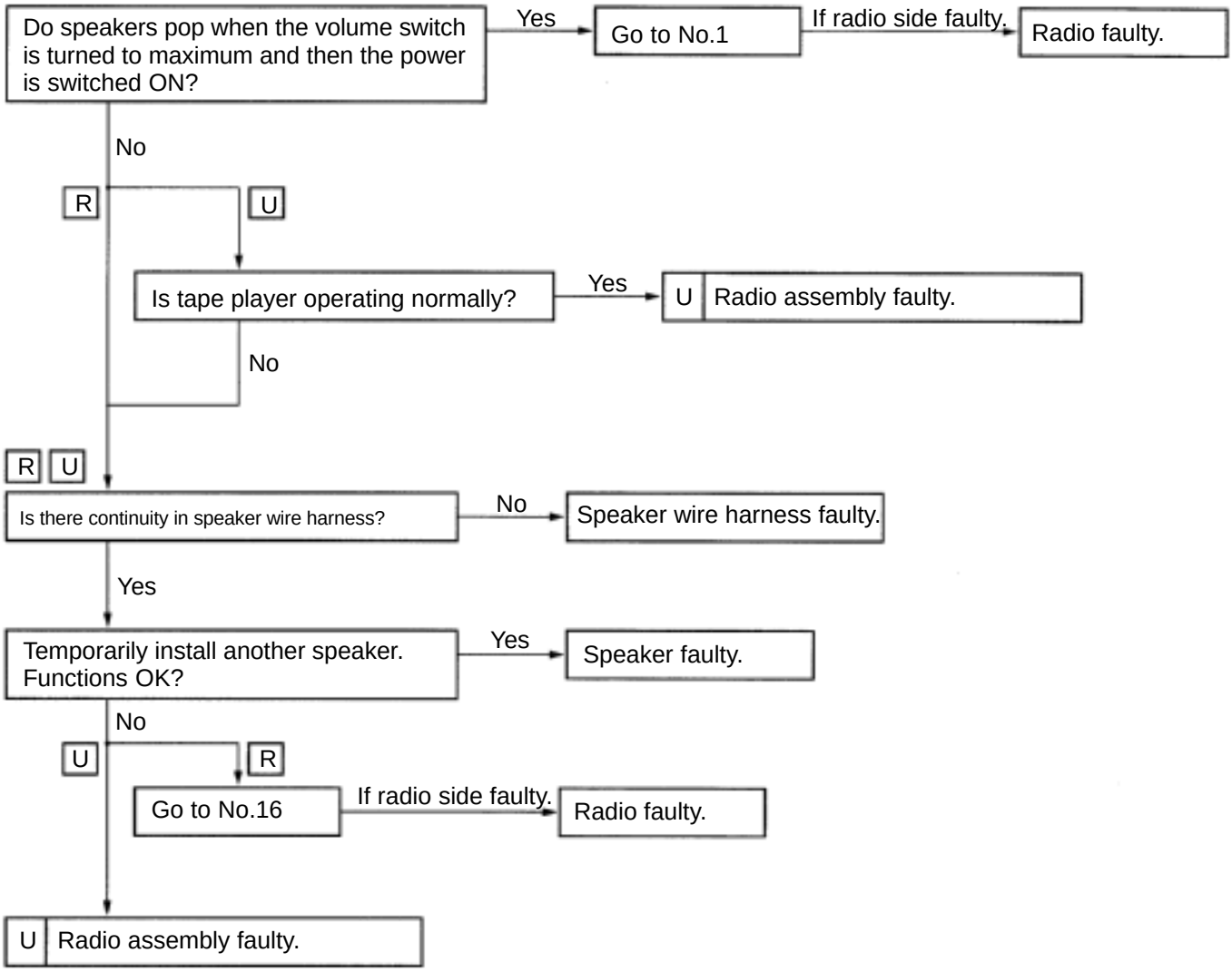

3 Radio — NOISE PRESENT, BUT AM–FM NOT OPERATING

R : Radio U : Radio – Tape Player Unit

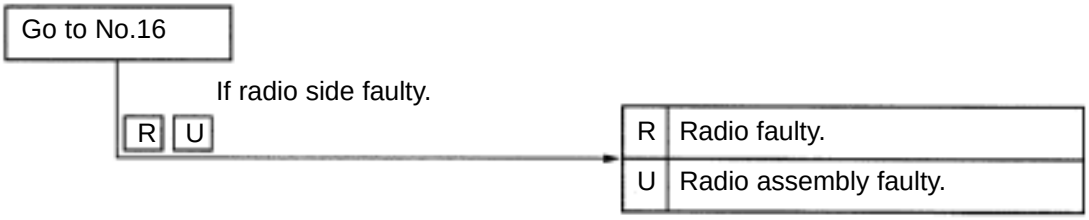

V08172

4	Radio	EITHER SPEAKER DOES NOT WORK

R : Radio U : Radio – Tape Player Unit

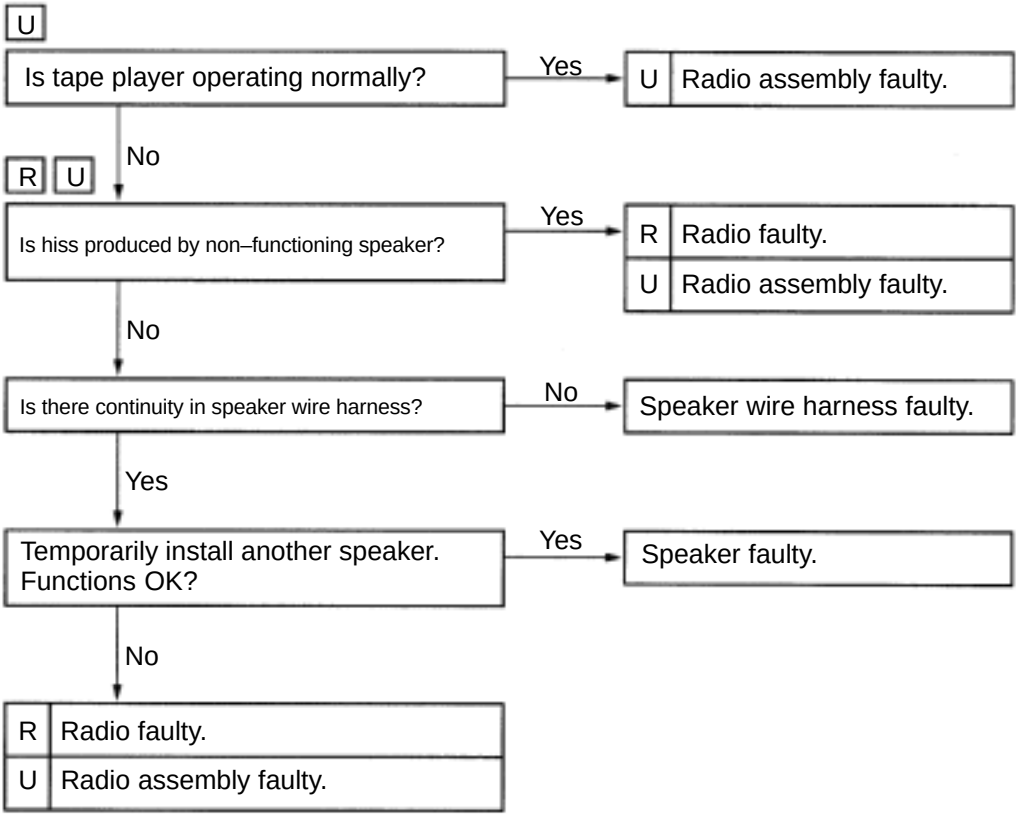

V08173

5	Radio	EITHER AM OR FM DOES NOT WORK, RECEPTION POOR (VOLUME FAINT), FEW PRESET TUNING BANDS

R : Radio U : Radio – Tape Player Unit

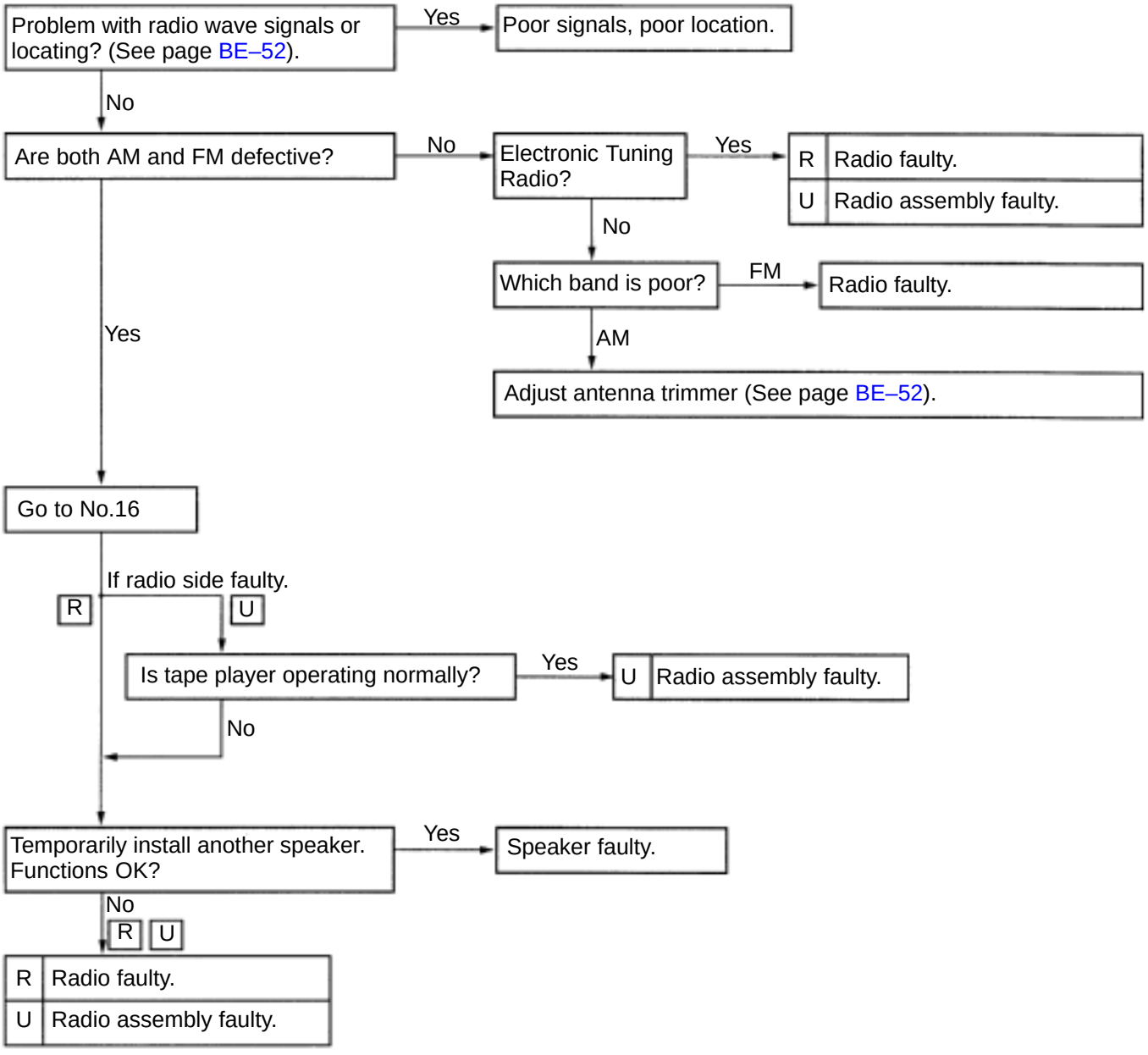

V08174

6	Radio	SOUND QUALITY POOR

R : Radio U : Radio – Tape Player Unit

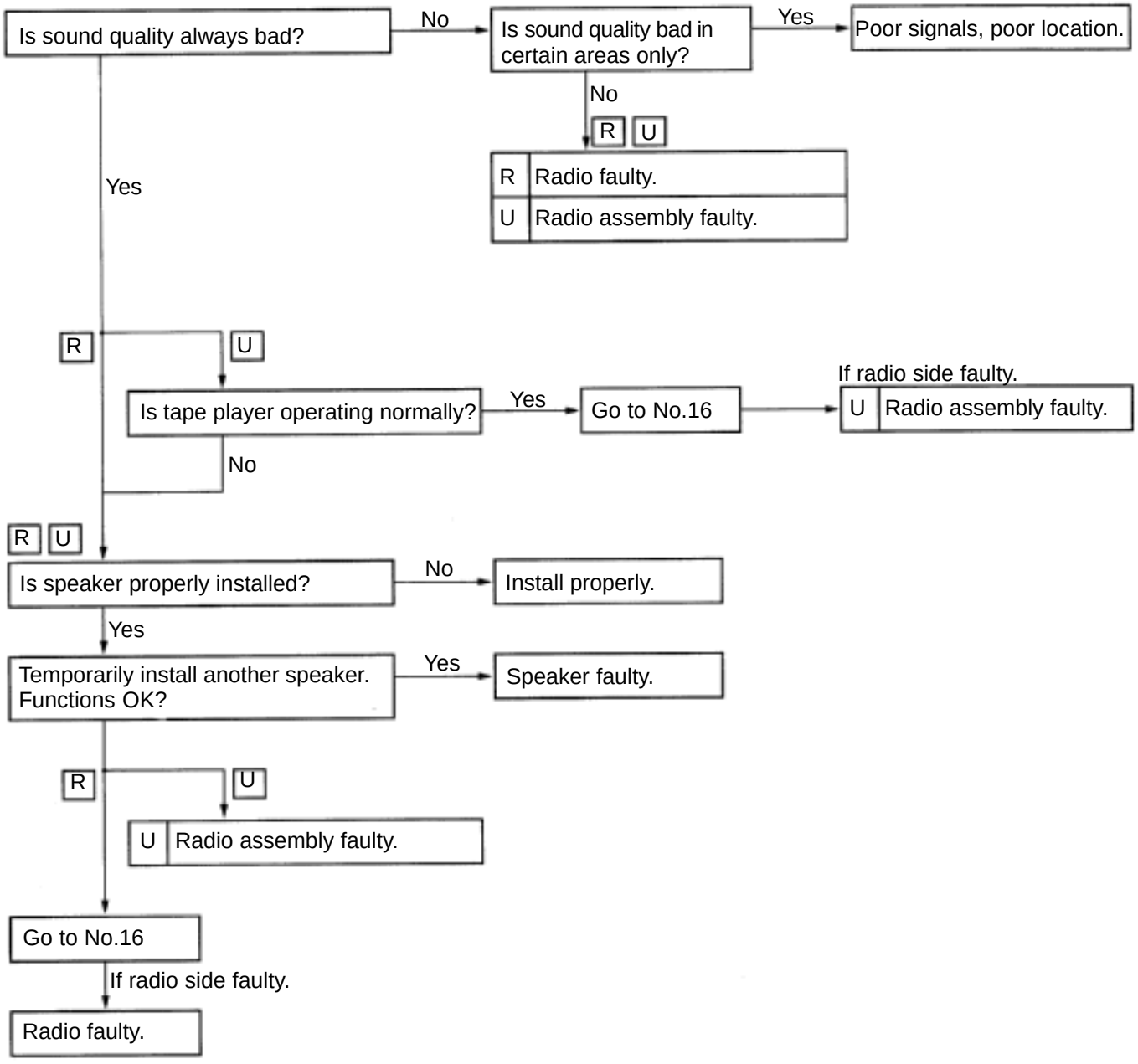

V08175

7	Radio	CANNOT SET STATION SELECT BUTTON, PRESET MEMORY DISAPPEARS

R : Radio U : Radio – Tape Player Unit

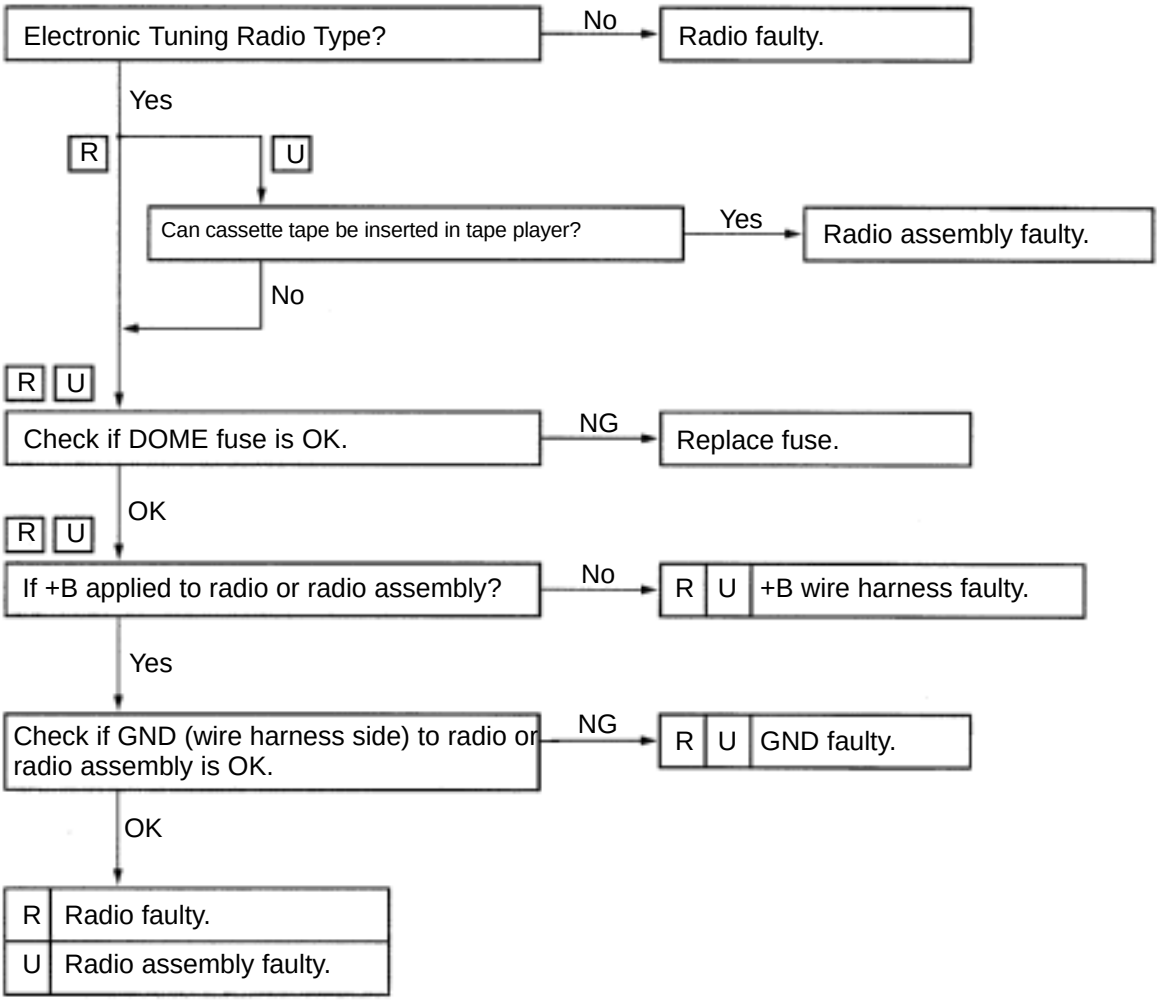

V08176

8	Tape Player	CASSETTE TAPE CANNOT BE INSERTED

U : Radio – Tape Player Unit

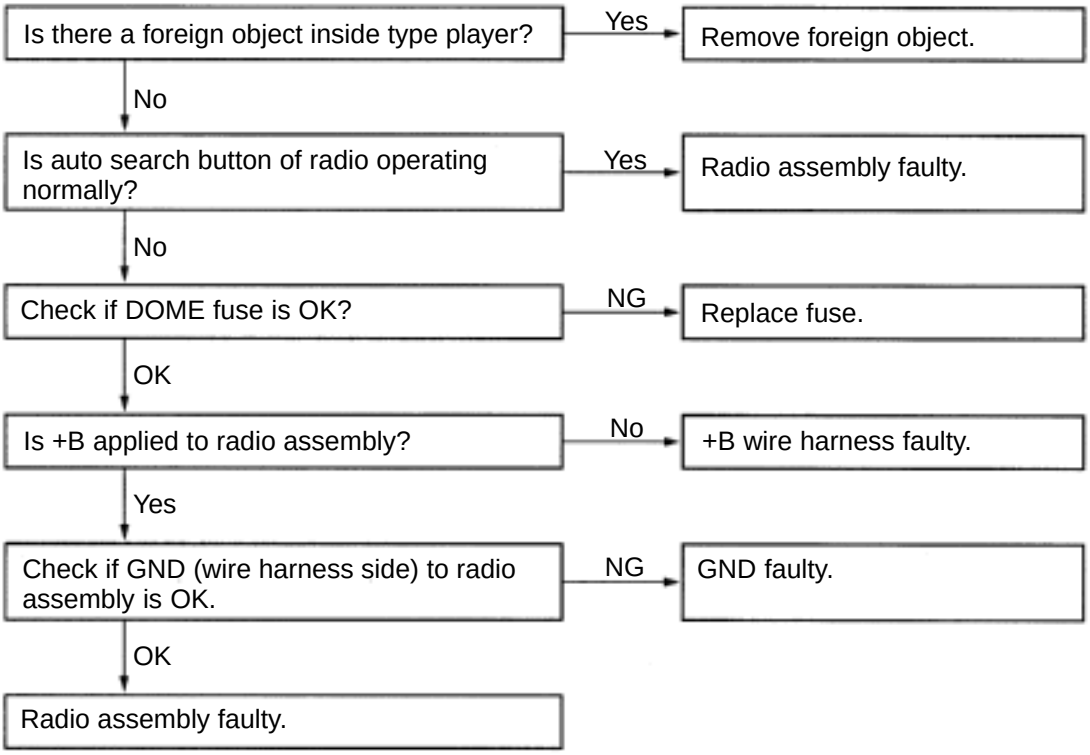

9	Tape Player	CASSETTE TAPE INSERTS, BUT NO POWER

U : Radio – Tape Player Unit

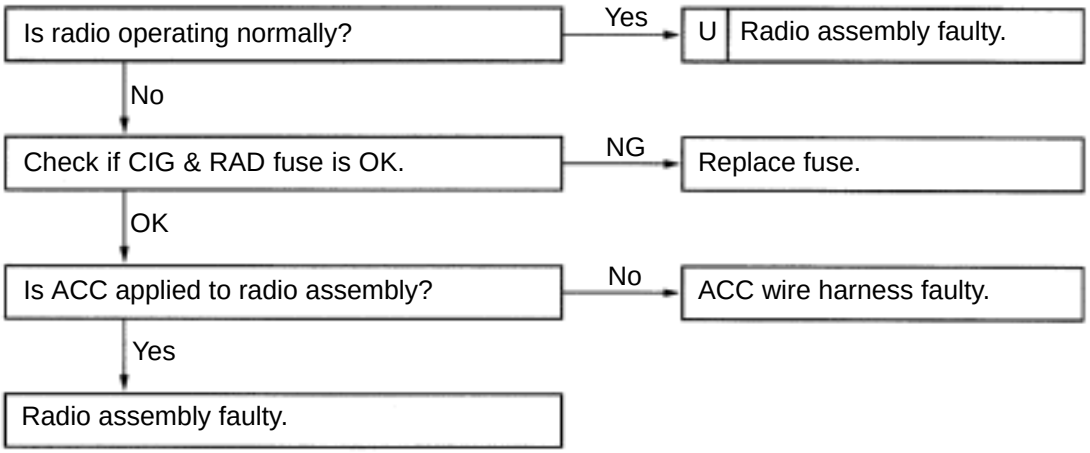

V08177

10	Tape Player	POWER COMING IN, BUT TAPE PLAYER NOT OPERATING

U : Radio – Tape Player Unit

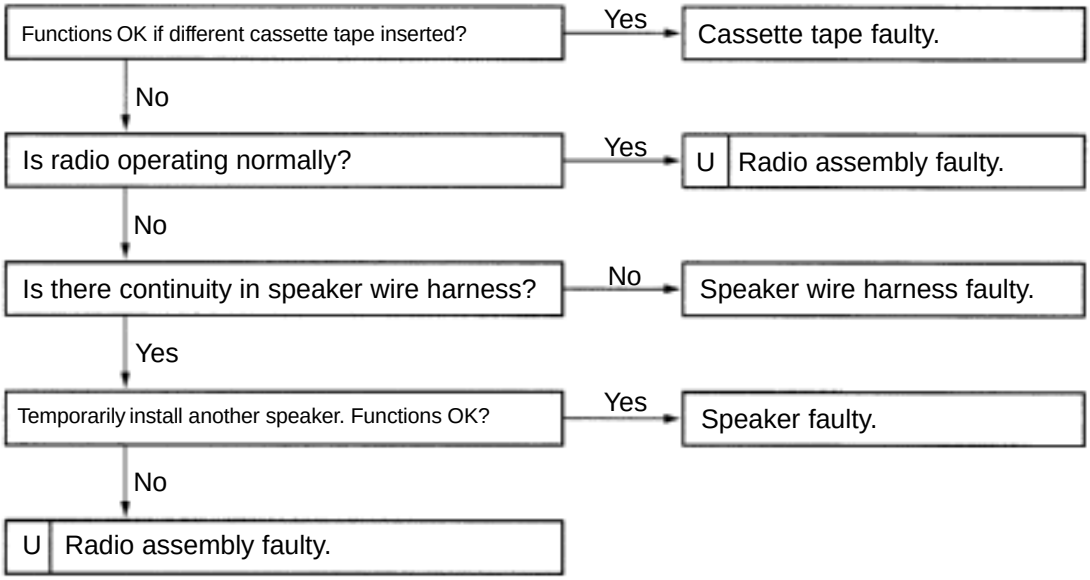

11	Tape Player	EITHER SPEAKER DOES NOT WORK

U : Radio – Tape Player Unit

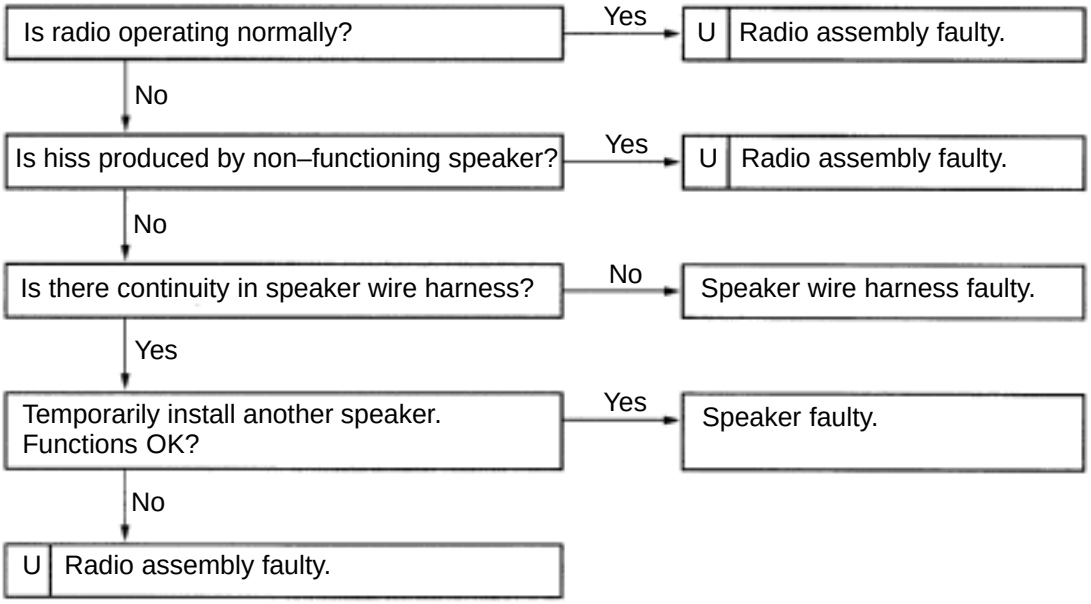

V08178

12	Tape Player	SOUND QUALITY POOR (VOLUME FAINT)

U : Radio – Tape Player Unit

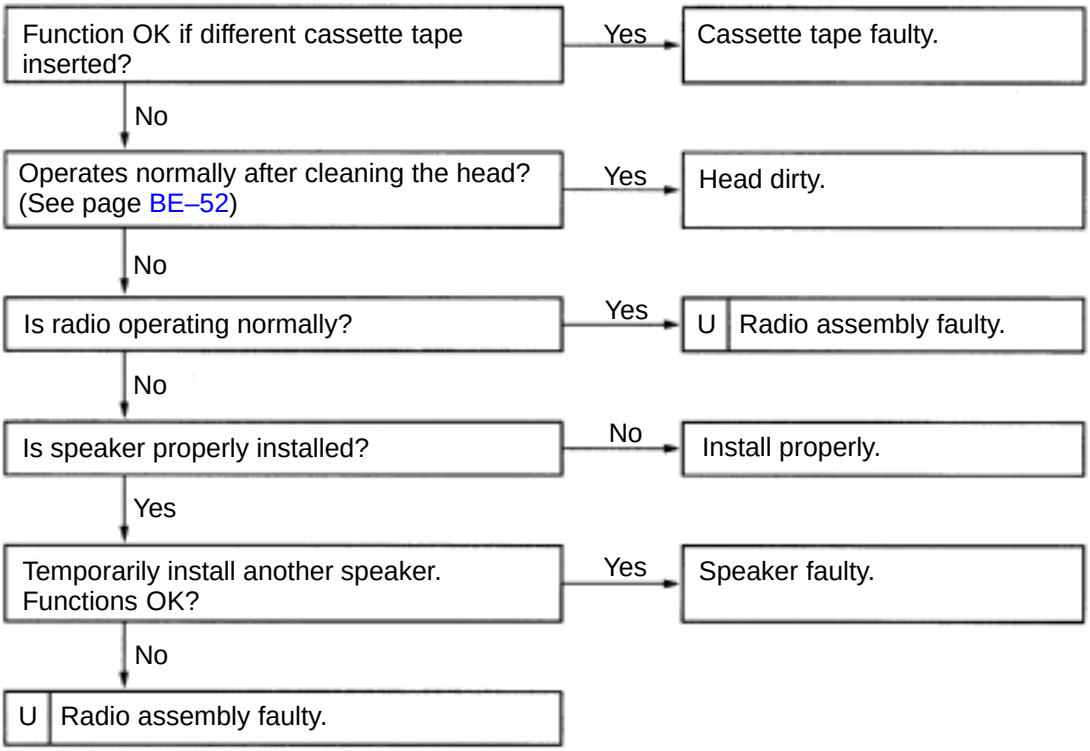

13	Tape Player	TAPE JAMMED, MALFUNCTION WITH TAPE SPEED OR AUTO–REVERSE

U : Radio – Tape Player Unit

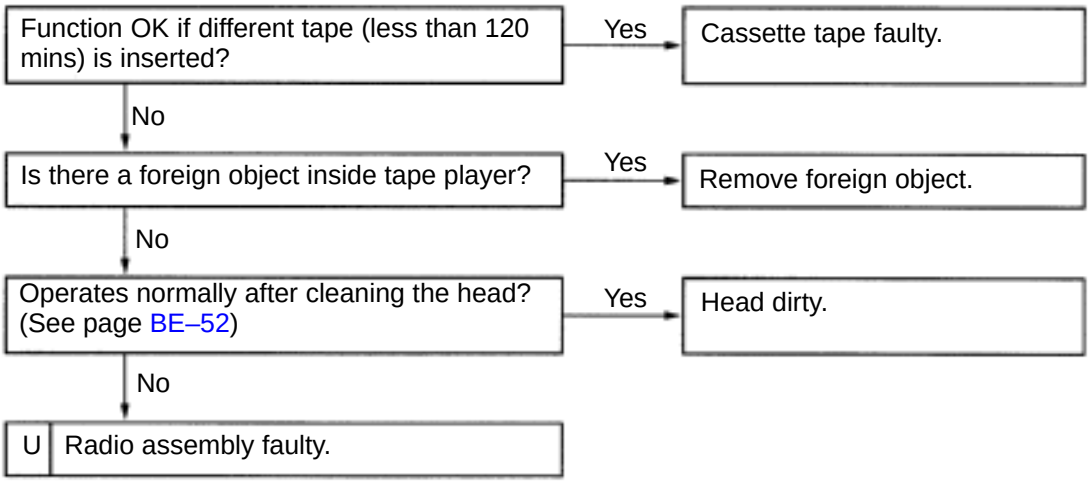

V08179

14	Tape Player	APS, SKIP, RPT BUTTONS NOT OPERATING

Functions OK if different cassette tape inserted? → No → Radio assembly faulty.

↓ Yes

Cassette tape faulty. (Less than 3 secs. of silence between songs (APS, RPT). Less than 15 secs. of silence (SKIP).)

15	Tape Player	CASSETTE TAPE WILL NOT EJECT

U : Radio – Tape Player Unit

Is tape player operating normally? → No → Cassette tape jammed.

↓ Tape

Is auto search button of radio operating normally? → Yes → Radio assembly faulty.

↓ No

Check if DOME fuse is OK? → NG → Replace fuse.

↓ OK

Is +B applied to radio assembly? → No → +B wire harness faulty.

↓ Yes

Radio assembly faulty.

M00015

16	**Antenna**	**ANTENNA–RELATED**

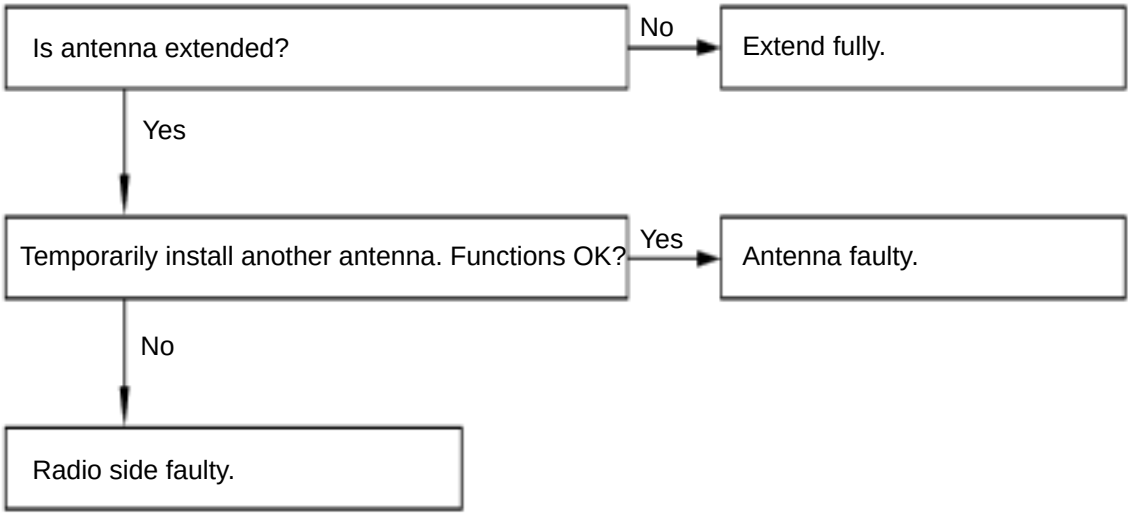

17	**Noise**	**NOISE PRODUCED BY VIBRATION OR SHOCK WHILE DRIVING**

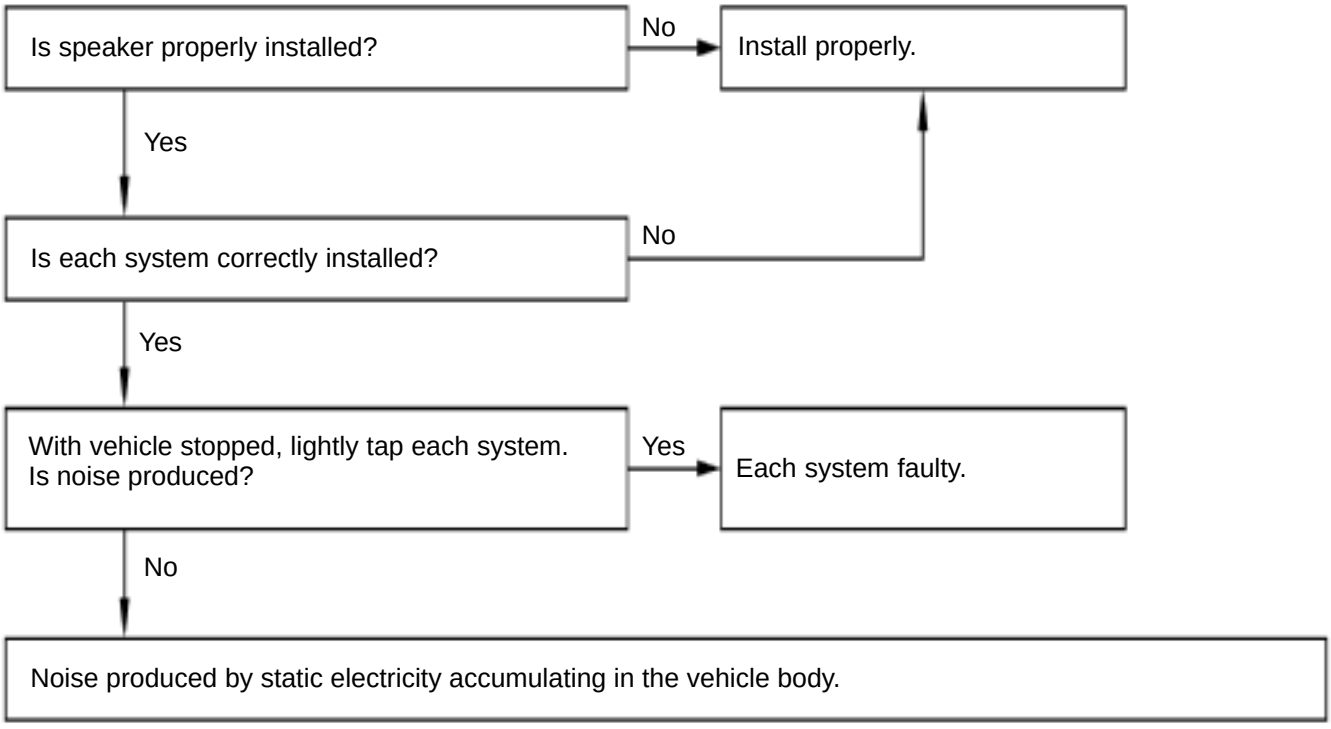

M00018

18	Noise	NOISE PRODUCED WHEN ENGINE STARTS

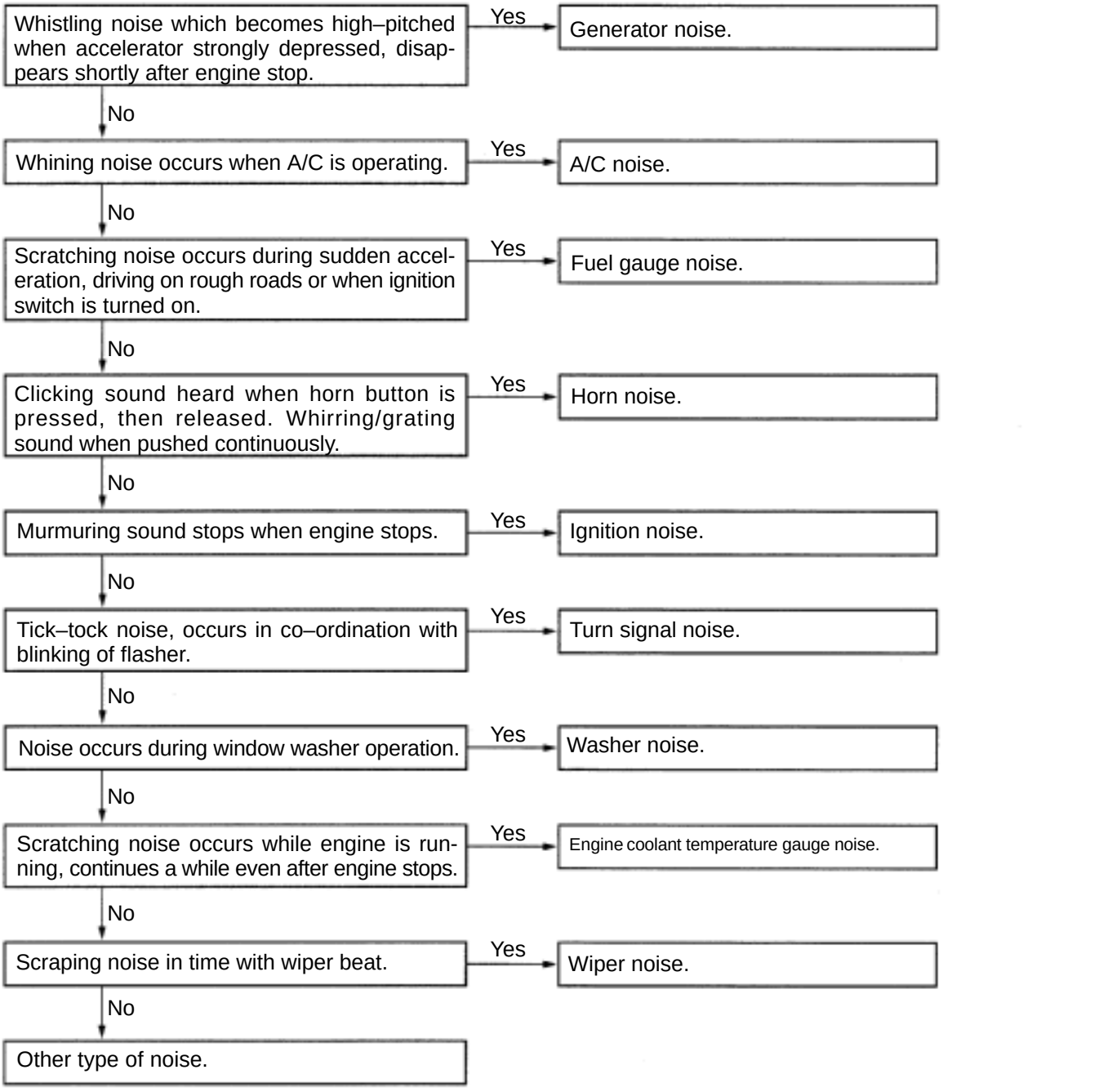

V08183

BODY ELECTRICAL SYSTEM

BE0PT–02

PRECAUTION

Take care to observe the following precautions when performing inspections or removal and replacement of body electrical related parts.

1. HEADLIGHT SYSTEM

- Halogen bulbs have pressurized gas inside and require special handling. They can burst if scratched or dropped. Hold a bulb only by its plastic or metal case. Don't touch the glass part of a bulb with bare hands.

2. SRS (SUPPLEMENTAL RESTRAINT SYSTEM)

- The PASEO is equipped with an SRS (Supplemental Restraint System) such as the driver airbag and front passenger airbag. Failure to carry out service operation in the correct sequence could cause the SRS to unexpectedly deploy during servicing, possibly leading to a serious accident. Before servicing (including removal or installation of parts, inspection or replacement), be sure to read the precautionary notices in the RS section.

3. AUDIO SYSTEM

- If the negative (–) terminal cable is disconnected from the battery, the preset AM, FM 1 and FM 2 stations stored in memory are erased, so be sure to note the stations and reset them after the negative (–) terminal cable is reconnected to the battery.
- If the negative (–) terminal cable is disconnected from the battery, the "ANTI–THEFT SYSTEM" will operate when the cable is reconnected, but the radio and tape plater will not operate. Be sure to input the correct ID number so that the radio and tape player can be operated again.

4. MOBILE COMMUNICATION SYSTEM

- If the vehicle is equipped with a mobile communication system, refer to precautions in the IN section.

BE0PU–02

PROBLEM SYMPTOMS TABLE

The table below will be useful for you in troubleshooting these electrical problems. The most likely causes of the malfunction are shown in the order of their probability. Inspect each part in the order shown, and replace the part when it is found to be faulty.

1. IGNITION SWITCH AND KEY UNLOCK WARNING SWITCH

Trouble	Parts name	See page
Ignition switch is not set to each position.	1. Ignition Switch	BE–11
”Key unlock warning system” does not operate.	1. GAUGE Fuse (Instrument Panel J/B) 2. Key Unlock Warning Switch 3. Door Courtesy Switch 4. Wire Harness	– BE–11 BE–35 –

2. HEADLIGHT AND TAILLIGHT SYSTEM

Trouble	Parts name	See page
”Light–on warning system” does not operate.	1. Integration Relay (Instrument Panel J/B) 2. DOME Fuse (Engine Room R/B) 3. GAUGE Fuse (Instrument Panel J/B) 4. TAIL Fuse (Instrument Panel J/B) 5. CIG/RAD Fuse (Instrument Panel J/B) 6. Wire Harness 7. Door Courtesy Switch	BE–15 – – – – – BE–35

USA:

Trouble	Parts name	See page
Only one side headlight does not light up.	1. HEAD Fuse (LH, RH) (Engine Room R/B) 2. Headlight Bulb 3. Wire Harness	– – –
”Lo–Beam” does not light up.	1. Headlight Dimmer Switch 2. Wire Harness	BE–15 –
”Hi–Beam” does not light up.	1. Headlight Dimmer Switch 2. Wire Harness	BE–15 –
”Flash” does not light up.	1. Headlight Dimmer Switch 2. Wire Harness	BE–15 –
Headlight does not light up. (Taillight is normal)	1. Headlight Control Relay (Engine Room R/B) 2. Headlight Dimmer Switch 3. Light Control Switch 4. Headlight Bulb 5. Wire Harness	BE–15 BE–15 BE–15 – –
Headlight does not light up. (Taillight does not light up)	1. Light Control Switch 2. Wire Harness 3. Headlight Bulb	BE–15 – –
Only one side taillight does not light up.	1. Taillight Bulb 2. Wire Harness	– –
Taillight does not light up. (Headlight is normal)	1. TAIL Fuse (Instrument Panel J/B) 2. Taillight Control Relay (Instrument Panel J/B) 3. Light Control Switch 4. Headlight Bulb 5. Wire Harness	– BE–15 BE–15 – –
Taillight does not light up. (Headlight does not light up)	1. Light Control Switch 2. Headlight Bulb 3. Wire Harness	BE–15 – –

CANADA:

Trouble	Parts name	See page
Only one side headlight does not light up.	1. Headlight Bulb 2. Wire Harness	– –
”Lo–Beam” does not light up. (ALL)	1. Headlight Control Relay (Engine Room R/B) 2. Wire Harness	BE–15 –
”Lo–Beam” does not light up. (ONE SIDE)	1. HEAD LH–LWR Fuse (R/B No.5) 2. HEAD RH–LWR Fuse (R/B No.5) 3. Headlight Bulb 4. Wire Harness	– – – –
”Hi–Beam” does not light up. (ALL)	1. DRL Fuse (Engine Room R/B) 2. Headlight Dimmer Switch 3. D.R.L. Main Relay 4. D.R.L. No.4 Relay (R/B No.5) 5. Daytime Resistor 6. Wire Harness	– BE–15 BE–15 BE–15 BE–15 –
”Hi–Beam” does not light up. (ONE SIDE)	1. HEAD LH–UPR Fuse (R/B No.5) 2. HEAD RH–UPR Fuse (R/B No.5) 3. Headlight Bulb 4. Wire Harness	– – – –
”Flash” does not light up.	1. DRL Fuse (Engine Room R/B) 2. Headlight Dimmer Switch 3. D.R.L. Main Relay 4. D.R.L. No.4 Relay (R/B No.5) 5. Daytime Resistor 6. Wire Harness	– BE–15 BE–15 BE–15 BE–15 –
Headlight does not light up. (Taillight is normal)	1. Headlight Control Relay (Engine Room R/B) 2. D.R.L. Main Relay 3. D.R.L. No.4 Relay (R/B No.5) 4. Daytime Resistor 5. Headlight Dimmer Switch 6. Light Control Switch 7. Headlight Bulb 8. Wire Harness	BE–15 BE–15 BE–15 BE–15 BE–15 BE–15 – –
Headlight does not light up. (Taillight does not light up)	1. D.R.L. Main Relay 2. D.R.L. No.4 Relay (R/B No.5) 3. Daytime Resistor 4. Light Control Switch 5. Headlight Bulb 6. Wire Harness	BE–15 BE–15 BE–15 BE–15 – –
Only one side taillight does not light up.	1. Taillight Bulb 2. Wire Harness	– –
Taillight does not light up. (Headlight is normal)	1. TAIL Fuse (Instrument Panel J/B) 2. Taillight Control Relay (Instrument Panel J/B) 3. Light Control Switch 4. Headlight Bulb 5. Wire Harness	– BE–15 BE–15 – –
Taillight does not light up. (Headlight does not light up)	1. Light Control Switch 2. Headlight Bulb 3. Wire Harness	BE–15 – –
Headlight does not light up with light control SW in HEAD.	1. Light Control Switch 2. D.R.L. Main Relay 3. D.R.L. No.4 Relay (R/B No.5) 4. Daytime Resistor 5. Wire Harness	BE–15 BE–15 BE–15 BE–15 –

Headlight does not go out with light control SW in OFF.	1. Headlight Control Relay (Engine Room R/B) 2. Wire Harness	BE–15 –
Taillight does not light up with light control SW in TAIL.	1. Taillight Control Relay (Instrument Panel J/B) 2. Light Control Switch 3. Wire Harness	BE–15 BE–15 –
Taillight does not go out with light control SW in OFF.	1. Taillight Control Relay (Instrument Panel J/B) 2. Light Control Switch 3. Wire Harness	BE–15 BE–15 –
Headlight do not light up with engine running and light control SW in OFF.	1. DOME Fuse (Engine Room R/B) 2. ECU–IG Fuse (Instrument Panel J/B) 3. DRL Fuse (Engine Room R/B) 4. D.R.L. Main Relay 5. D.R.L. No.4 Relay (R/B No.5) 6. Daytime Resistor 7. Wire Harness 8. Generator L Terminal 9. Parking Brake Switch 10. Brake Fluid Level Warning Switch	– – – BE–15 BE–15 BE–15 – – BE–35 BE–35

3. TURN SIGNAL AND HAZARD WARNING SYSTEM

Trouble	Parts name	See page
”Hazard” and ”Turn” do not light up.	1. Hazard Warning Switch 2. Turn Signal Flasher 3. Wire Harness	BE–21 BE–21 –
No of blinks for Hazard. (Turn is abnormal)	1. Bulb 2. Turn Signal Flasher 3. Wire Harness	– BE–21 –
Hazard warning light does not light up. (Turn signal is normal)	1. HAZ–HORN Fuse (Engine Room R/B) 2. Wire Harness	– –
Hazard waning light does not light up in one direction.	1. Hazard Warning Switch 2. Wire Harness	BE–21 –
*1 Turn signal does not light up. (Combination meter, wiper and washer do not operate.)	1. TURN Fuse (Engine Room R/B) 2. Ignition Switch 3. Turn Signal Switch 4. Wire Harness	– BE–11 BE–21 –
*2 Turn signal does not light up. (Combination meter, wiper and washer are normal.)	1. TURN Fuse (Engine Room R/B) 2. Turn Signal Switch 3. Wire Harness	– BE–21 –

*1: Combination Meter, Wiper and Washer do not operate.

*2: Combination Meter, Wiper and Washer are normal.

4. INTERIOR LIGHT SYSTEM

Trouble	Parts name	See page
Only one light does not light up.	1. Bulb 2. Wire Harness	– –
Map light does not light up.	1. Bulb 2. Map Light Assembly 3. Wire Harness	– BE–23 –
Luggage compartment light does not light up.	1. Bulb 2. DOME Fuse (Engine Room R/B) 3. Luggage compartment courtesy switch 4. Wire harness	– – BE–23 –

5. BACK–UP LIGHT SYSTEM

Trouble	Parts name	See page
Back–up Light does not light up.	1. Bulb 2. GAUGE Fuse (Instrument Panel J/B) 3. Ignition Switch 4. Park/Neutral Position Switch (A/X) 5. Back–up Light Switch (M/X) 6. Wire Harness	– – BE–11 – BE–25 –
Back–up light always remains on.	1. Wire Harness	–
Only one light does not light up.	1. Bulb 2. Wire Harness	– –

6. STOP LIGHT SYSTEM

Trouble	Parts name	See page
Stop light does not light up.	1. Bulb 2. STOP Fuse (Instrument Panel J/B) 3. Stop Light Switch 4. Wire Harness	– – BE–27 –
Stop light always remains on.	1. Stop Light Switch 2. Wire Harness	BE–27 –
Only one light does not light up.	1. Bulb 2. Wire Harness	– –

7. WIPER AND WASHER SYSTEM

Trouble	Parts name	See page
Wipers and washers do not operate.	1. WIPER Fuse (Instrument Panel J/B) 2. Ignition Switch 3. Wiper and Washer Switch 4. Wire Harness	– BE–11 BE–29 –
Wiper does not operate.	1. Wiper and Washer Switch 2. Wiper Motor 3. Wire Harness	BE–29 BE–29 –
Washer does not operate.	1. Wiper and Washer Switch 2. Washer Motor 3. Wire Harness	BE–29 BE–29 –

8. COMBINATION METER METER, GAUGES AND ILLUMINATION

Trouble	Parts name	See page
Tachometer, Fuel Gauge and Engine Coolant Temperature Gauge do not operate.	1. GAUGE Fuse (Instrument Panel J/B) 2. Meter Circuit 3. Wire Harness	– BE–33 –
Speedometer does not operate.	1. Vehicle Speed Sensor (in Combination Meter) 2. Meter Circuit 2. Wire Harness	BE–35 BE–33 –
Tachometer does not operate.	1. Igniter 2. ECM 3. Meter Circuit 4. Wire Harness	– – BE–33 –
Fuel Gauge does not operate or operate abnormally.	1. Fuel Receiver Gauge 2. Fuel Sender Gauge 3. Meter Circuit 4. Wire Harness	BE–35 BE–35 BE–33 –

Engine Coolant Temperature Gauge does not operate or operate abnormally.	1. Engine Coolant Temperature Receiver Gauge 2. Engine Coolant Temperature Sender Gauge 3. Meter Circuit 4. Wire Harness	BE–35 BE–35 BE–33 –
All illumination lights do not light up.	1. TAIL Fuse (Instrument Panel J/B) 2. Light Control Rheostat 3. Meter Circuit 4. Wire Harness	– BE–35 BE–33 –
Brightness does not change even when rheostat turned.	1. Light Control Rheostat 2. Wire Harness	BE–35 –
Only one illumination light does not light up.	1. Bulb 2. Meter Circuit	– BE–33

WARNING LIGHTS

Trouble	Parts name	See page
Warning lights do not light up. (Except Discharge, SRS and Door Open)	1. Bulb 2. GAUGE Fuse (Instrument Panel J/B) 3. Ignition Switch 4. Meter Circuit 5. Wire Harness	– – BE–11 BE–33 –
Brake Warning Light does not light up.	1. Bulb 2. Brake Fluid Level Warning Switch 3. Parking Brake Switch 4. Meter Circuit 5. Wire Harness	– BE–35 BE–35 BE–33 –
Seat Belt Warning Light does not light up.	1. Bulb 2. Seat Belt Retractor Switch 3. Meter Circuit 4. Wire Harness	– BE–35 BE–33 –
Fuel Level Warning Light does not light up.	1. Bulb 2. Fuel Level Warning Switch 3. Meter Circuit 4. Wire Harness	– BE–35 BE–33 –
Low Oil Pressure Warning Light does not light up.	1. Bulb 2. Low Oil Pressure Warning Switch 3. Meter Circuit 4. Wire Harness	– BE–35 BE–33 –
Door Open Warning Light does not light up.	1. Bulb 2. DOME Fuse (Engine Room R/B) 3. Door Courtesy Switch 4. Meter Circuit 5. Wire Harness	– – BE–35 BE–33 –
Discharge Warning Light does not light up.	1. Bulb 2. IGN Fuse (Instrument Panel J/B) 3. Generator 4. Meter Circuit 5. Wire Harness	– – – BE–33 –

INDICATOR LIGHTS

Trouble	Parts name	See page
ABS Indicator Light does not light up.	1. Bulb 2. Wire Harness 3. ABS ECU	– – DI–171
Malfunction Indicator Light does not light up.	1. Bulb 2. ECM 3. Wire Harness	– – –
O/D OFF Indicator Light does not light up.	1. Bulb 2. O/D Main Switch 3. ECM 4. Meter Circuit 5. Wire Harness	– DI–164 – BE–33 –
Turn Indicator Light does not light up.	1. Bulb 2. Turn Signal and Hazard Warning System 3. Meter Circuit 4. Wire Harness	– BE–20 BE–33 –
High Beam Indicator Light does not light up.	1. Bulb 2. Headlight and Taillight System 3. Meter Circuit 4. Wire Harness	– BE–13 BE–33 –
CRUISE MAIN Indicator Light does not light up.	1. Bulb 2. Cruise control ECU 3. Meter Circuit Plate 4. Wire Harness	– DI–299 BE–33 –
Security Indicator Light does not light up.	1. Bulb 2. Theft Deterrent System 3. Meter Circuit 4. Wire Harness	– DI–265 BE–33 –

9. DEFOGGER SYSTEM

Trouble	Parts name	See page
Rear window defogger does not operate.	1. DEF M–Fuse (Instrument Panel J/B) 2. GAUGE Fuse (Instrument Panel J/B) 3. Defogger Switch 4. Defogger Relay 5. Defogger wire 6. Wire Harness	– – BE–42 BE–42 BE–42 –

10. POWER WINDOW CONTROL SYSTEM

Trouble	Parts name	See page
Power window does not operate. (Door lock is normal.)	1. GAUGE Fuse (Instrument Panel J/B) 2. POWER M–Fuse (R/B No.7) 3. Power Main Relay (R/B No.7) 4. Ignition Switch 5. Power Window Master Switch 6. Wire Harness	– – BE–45 BE–11 BE–45 –
”One Touch Power Window System” does not operate.	1. Power Window Master Switch	BE–45
Only one window glass does not move.	1. Power Window Master Switch 2. Power Window Switch 3. Power Window Motor 4. Wire Harness	BE–45 BE–45 BE–45 –
”Window Lock System” does not operate.	1. Power Window Master Switch	BE–45

11. POWER DOOR LOCK CONTROL SYSTEM

Trouble	Parts name	See page
”Door lock control system” does not operate (All).	1. POWER M–Fuse (Relay Block No.7) 2. Door Lock Control Relay 3. Wire Harness 4. Other Parts	– BE–49 – –
Malfunction in Door Lock/ Unlock. (Using door manual switch)	1. Door Lock Control Relay 2. Door Lock Control Switch 3. Wire Harness 4. Other Parts	BE–49 BE–49 – –
Malfunction in Door Lock/ Unlock. (Using door manual switch and key)	1. Wire Harness 2. Other Parts	– –
Malfunction in Door Lock/ Unlock. (Using Key)	1. Door Lock Control Relay 2. Door Key Lock and Unlock Switch 3. Wire Harness 4. Other Parts	BE–49 BE–49 – –
Fault in key confine prevention operation.	1. Door Lock Control Relay 2. Door Courtesy Switch 3. Door Lock Control Switch 4. Wire Harness 5. Other Parts	BE–49 BE–49 BE–49 – –
Only one door lock does not operate.	1. Door Lock Motor 2. Wire Harness	BE–49 –

BE0Q7–01

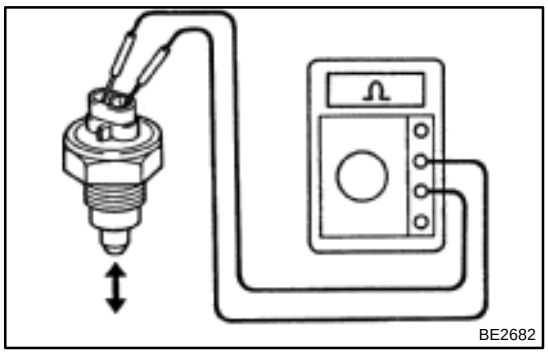
BE2682

INSPECTION

1. INSPECT BACK–UP LIGHT SWITCH CONTINUITY

Switch position	Specified condition
Push	Continuity
Free	No continuity

If continuity is not as specified, replace the switch.

2. INSPECT PARK/NEUTRAL POSITION SWITCH CONTINUITY

(See page DI–160)

BACK–UP LIGHT SYSTEM

LOCATION

BE0Q6–01

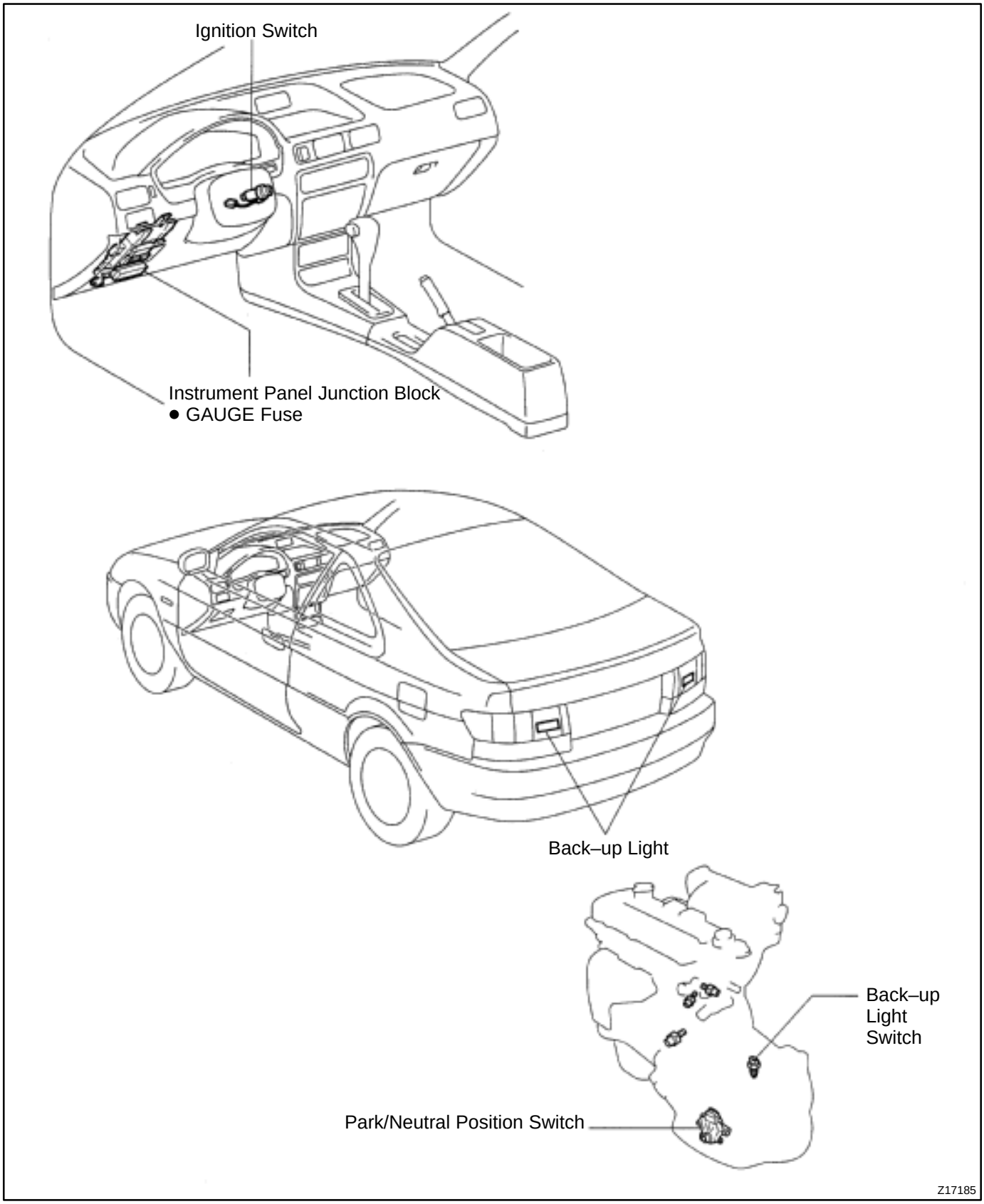

CLOCK

BE0QO–01

TROUBLESHOOTING

HINT:

Troubleshoot the clock according to the table below.

Problem	No.
Clock will not operate	1
Clock loses or gains time	2

± 1.5 seconds / day

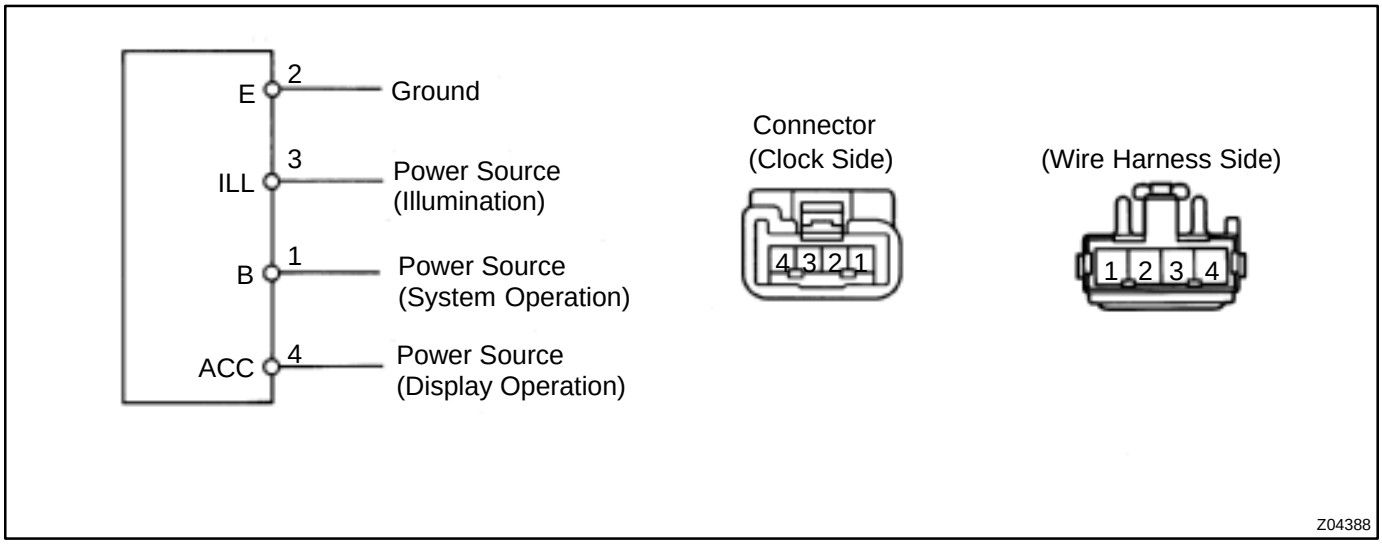

1. PROBLEM No.1

1	**CLOCK WILL NOT OPERATE**

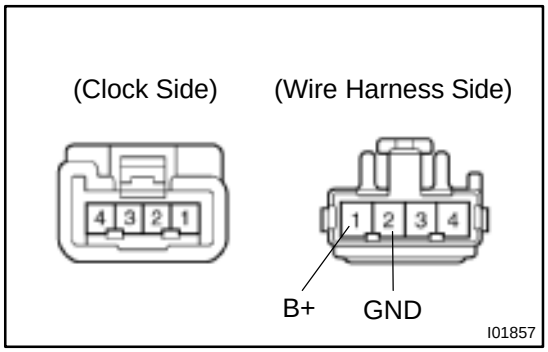

(a) Check that the battery positive voltage is 10 – 16 V.

If voltage is not as specified, replace the battery.

(b) Check that the DOME fuse is not blown.

If the fuse is blown, replace the fuse and check for short.

(c) Troubleshoot the clock as follows.

HINT:

Inspect the connector on the wire harness side.

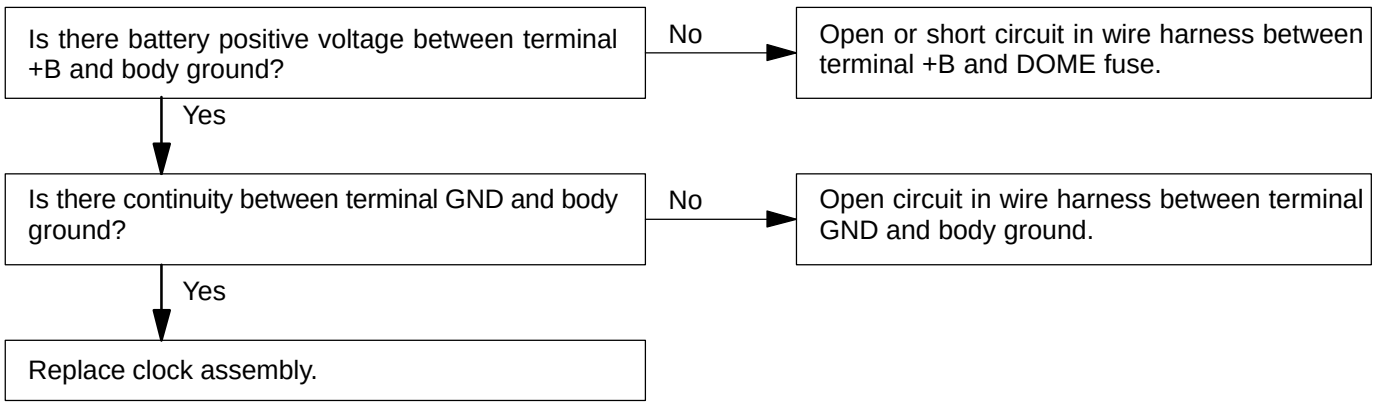

2. PROBLEM No.2

2	**CLOCK LOSES OR GAINS TIME**

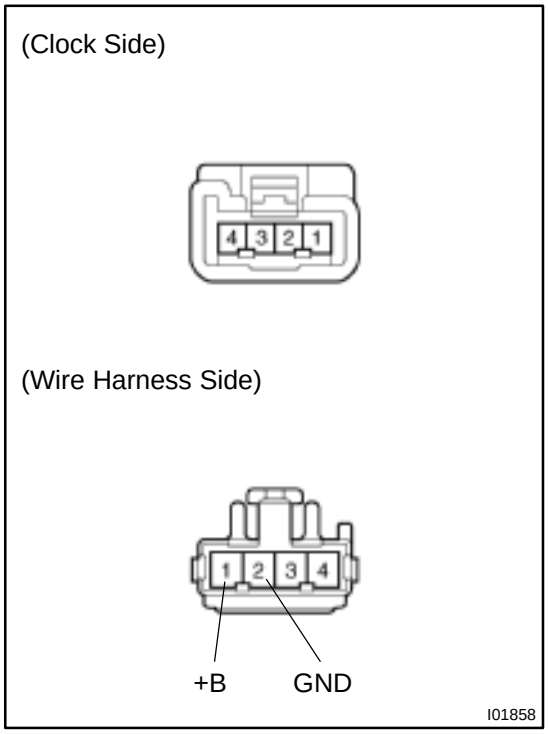

(a) Check that the battery positive voltage is 10 – 16 V.

If voltage is not as specified, replace the battery.

(b) Inspect the error of the clock.

Allowable error (per day): ± 1.5 seconds

If the error exceeds the allowable error, replace the clock assembly.

(c) Check if the clock adjusting button is sticking in position and has failed to return.

If the button has not returned, repair or replace the clock assembly.

(d) Troubleshoot the clock as follows.

HINT:

Inspect the connector on the wire harness side.

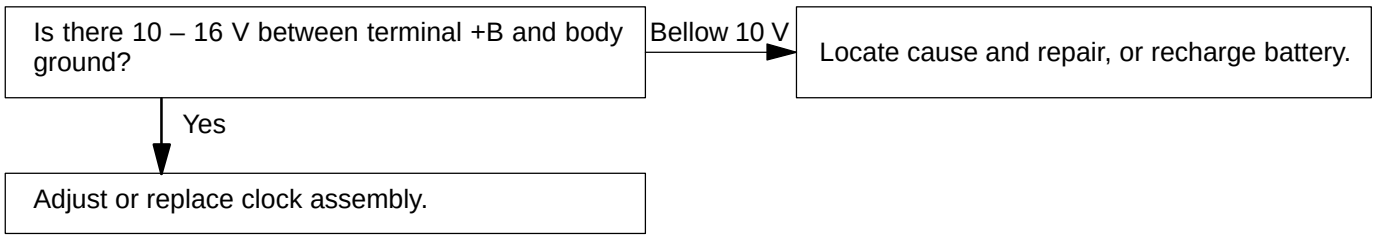

CIRCUIT

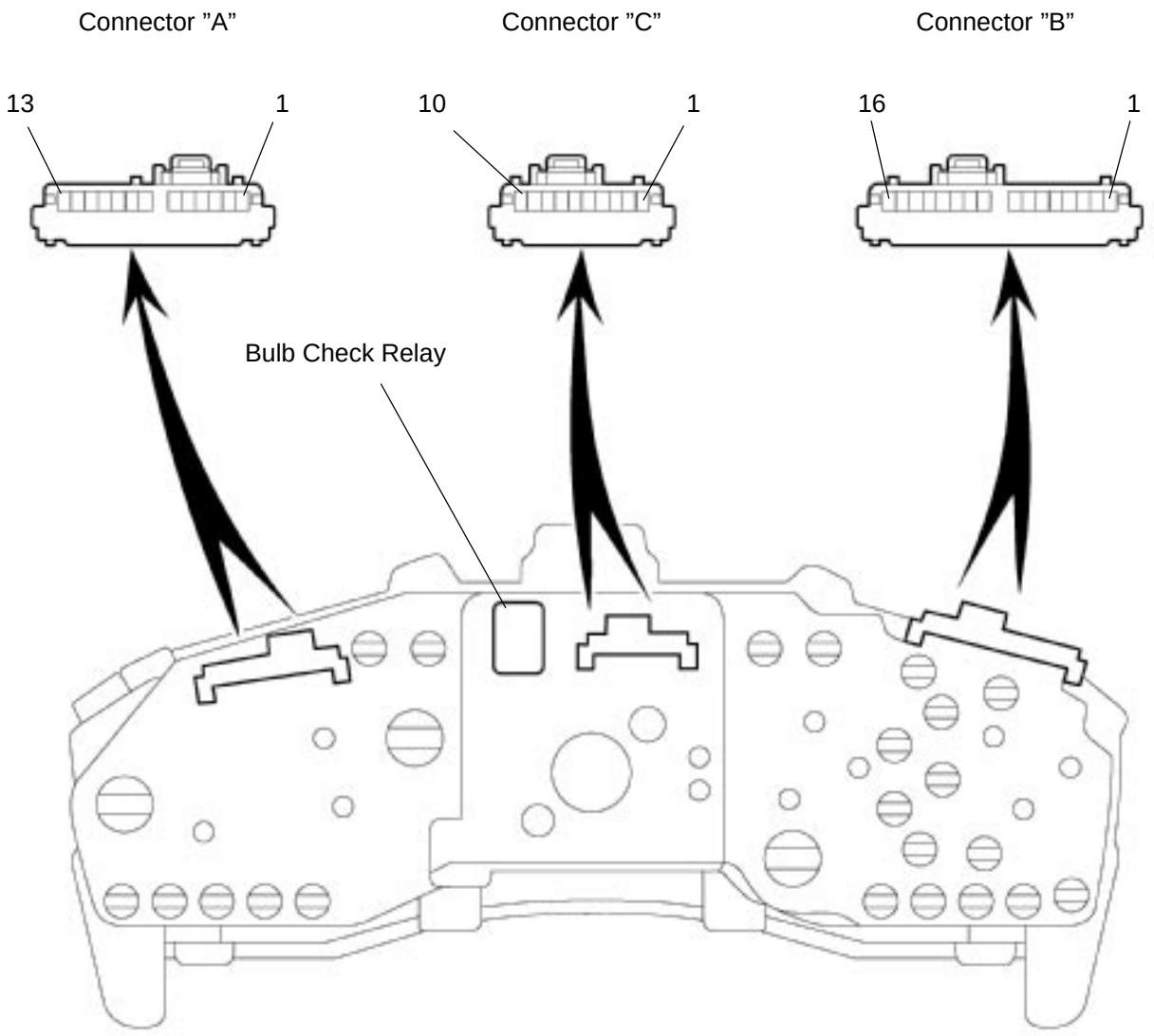
Connector ”A”
Connector ”C”
Connector ”B”
13
1
10
1
16
1
Bulb Check Relay
I05934

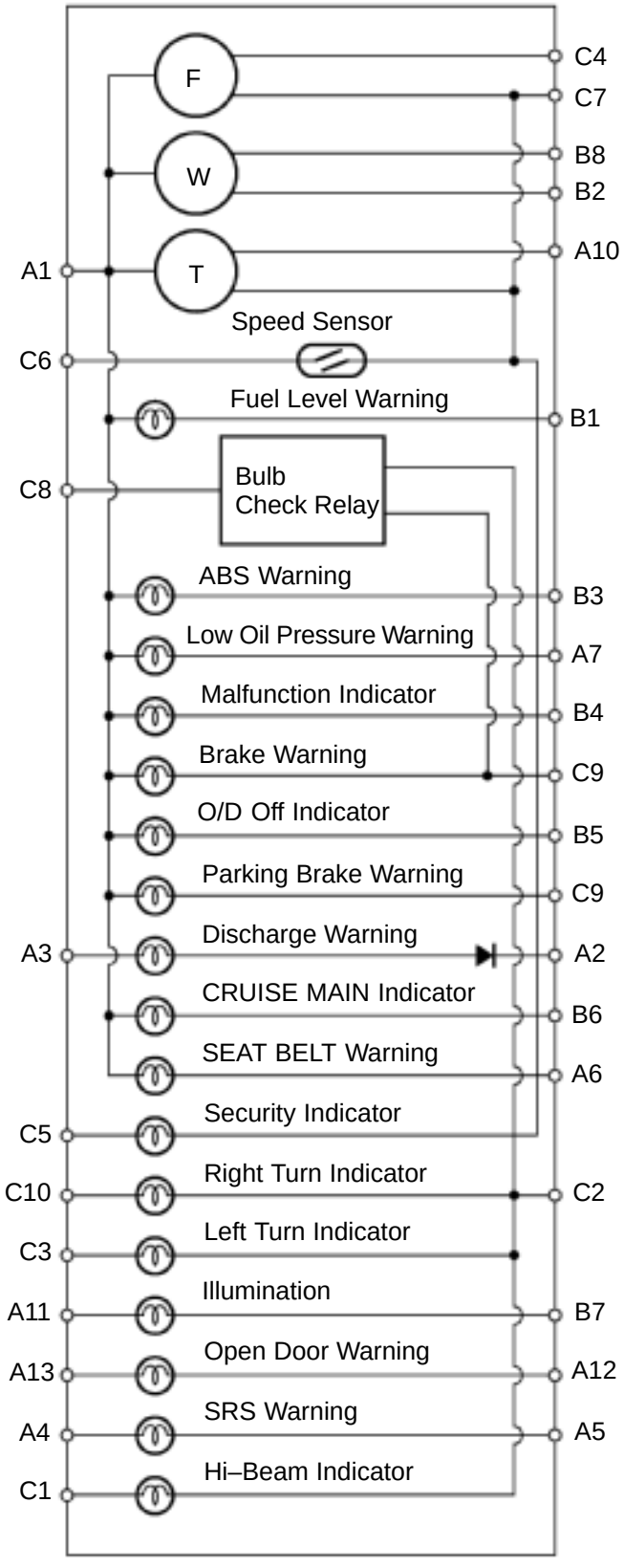

No.		Wiring Connector Side
A	1	GAUGE Fuse
	2	Generator
	3	IGN Fuse
	4	SRS Fuse
	5	Airbag Sensor Assembly
	6	Seat Belt Buckle Switch
	7	Low Oil Pressure Warning Switch
	10	Igniter
	11	TAIL Fuse
	12	Door Courtesy Switch
	13	DOME Fuse
B	1	Fuel Level Warning Switch
	2	Engine Coolant Temperature Sender Gauge
	3	ABS ECU
	4	ECM
	5	O/D Off Switch
	6	Cruise Control ECU
	7	Ground
	8	Ground
C	1	Headlight Switch
	2	Ground
	3	Turn Signal Switch (Left)
	4	Fuel Sender Gauge
	5	Theft Deterrent ECU
	6	Speed Control Unit
	7	Ground
	8	Starter Relay
	9	Brake Fluid Level Warning Switch and Parking Brake Switch
	10	Turn Signal Switch (Right)

Ⓕ : Fuel Sender Gauge
Ⓦ : ECT Sender Gauge
Ⓣ : Tachometer

I05935

BE1LC–01

INSPECTION

1. INSPECT SPEEDOMETER ON–VEHICLE

Using a speedometer tester, inspect the speedometer for allowable indication error and check the operation of the odometer.
HINT:
Tire wear and tire over or under inflation will increase the indication error.
If error is excessive, replace the speedometer.

km/h		mph	
Standard indication	Allowable range	Standard indication	Allowable range
20	17 – 24	20	18 – 24
40	38 – 46	40	38 – 44
60	57.5 – 67	60	58 – 66
80	77 – 88	80	78 – 88
100	96 – 109	100	98 – 110
120	115 – 130	–	
140	134 – 151.5	–	
160	153 – 173	–	

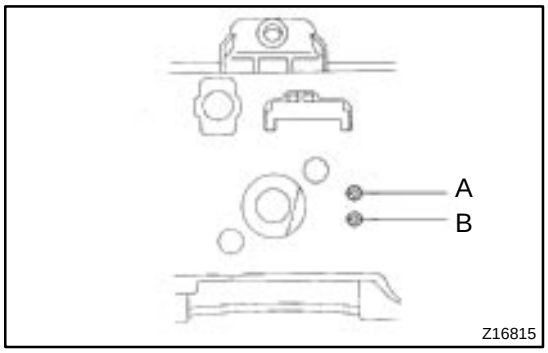

2. INSPECT VEHICLE SPEED SENSOR OPERATION

Check that there is continuity between terminals A and B 4 times for every revolution of the speedometer shaft.
If operation is not as specified, replace the speedometer.

3. INSPECT TACHOMETER ON–VEHICLE

(a) Connect a tune–up test tachometer, and start the engine.

NOTICE:

The connection of the tachometer in reverse will damage the transistors and diodes inside. When removing or installing the tachometer, be careful not to drop or subject it to heavy shocks.

(b) Compare the tester and tachometer indications.

DC 13.5 V 25˚C (77 ˚F)

Standard indication (rpm)	Allowable range (rpm)
700	630 – 770
1,000	900 – 1,100
2,000	1,850 – 2,150
3,000	2,800 – 3,200
4,000	3,800 – 4,200
5,000	4,800 – 5,200
6,000	5,750 – 6,250
7,000	6,700 – 7,300

If error is excessive, replace the tachometer.

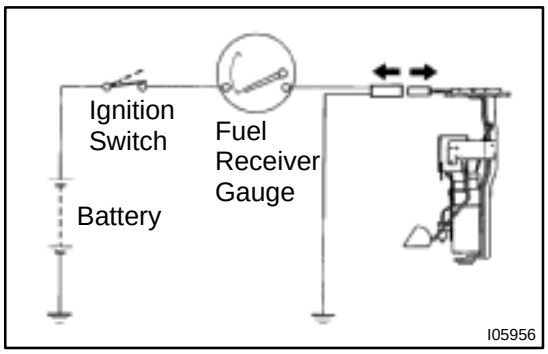

4. INSPECT FUEL RECEIVER GAUGE OPERATION

(a) Disconnect the connector from the sender gauge.

(b) Turn the ignition switch ON, check that the receiver gauge needle indicates EMPTY.

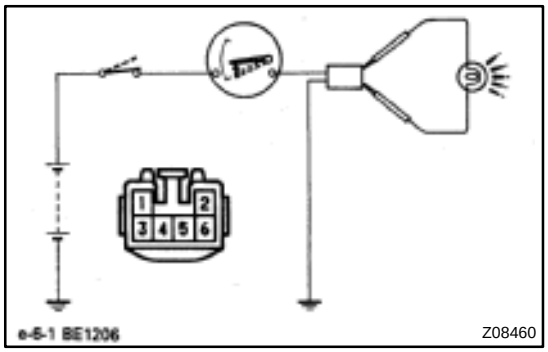

(c) Connect terminals 3 and 4 on the wire harness side connector through a 3.4 W test bulb.

(d) Turn the ignition switch ON, and check that the bulb lights up and the receiver gauge needle moves towards the full side.

HINT:

Because of the silicon oil in the gauge, it will take a short time for needle to stabilize.

If operation is not as specified, inspect the receiver gauge resistance.

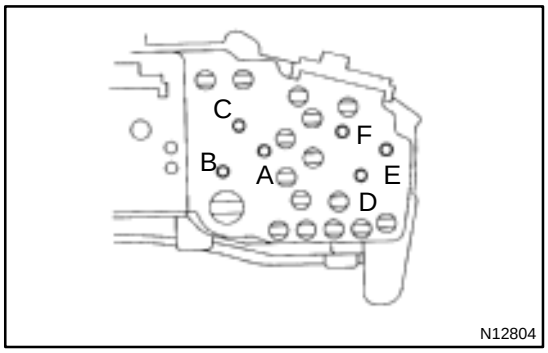

5. INSPECT FUEL RECEIVER GAUGE RESISTANCE

Measure the resistance between terminals.

Between terminals	Resistance (Ω)
A – B	Approx. 115.8
A – C	Approx. 177.2
B – C	Approx. 61.4

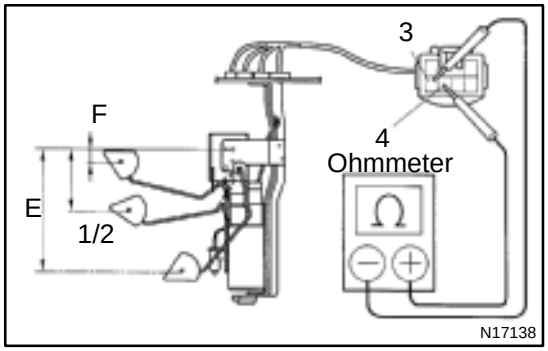

6. INSPECT FUEL SENDER GAUGE RESISTANCE

Measure the resistance between Red Cable and Black Cable.

Float position : mm (in.)	Resistance (Ω)
F : 13 ± 3 (0.5 ± 0.1)	3 ± 1.0
1/2 : 61 (2.4)	29 ± 4.8
E : 124 ± 3 (4.8 ± 0.1)	110 ± 7.7

If resistance value is not as specified, replace the sender gauge.

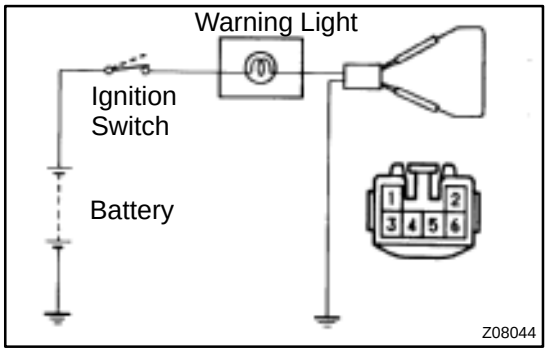

7. INSPECT FUEL LEVEL WARNING LIGHT

(a) Disconnect the connector from the sender gauge.

(b) Connect terminals 1 and 4 on the wire harness side connector.

(c) Turn the ignition switch ON, and check that the warning light lights up.

If the warning light does not light up, test the bulb.

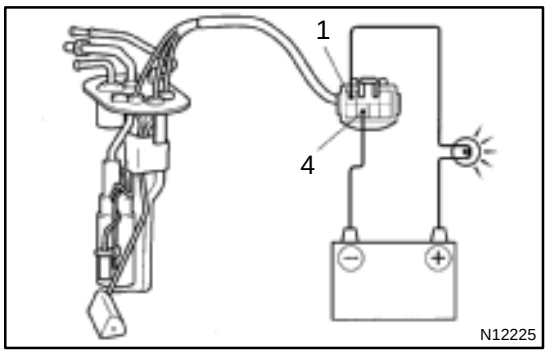

8. INSPECT FUEL LEVEL SWITCH OPERATION

(a) Apply battery voltage between terminals and through a 3.4 W test bulb, and check that the bulb lights up.

HINT:

It will take a short time for bulb to light up.

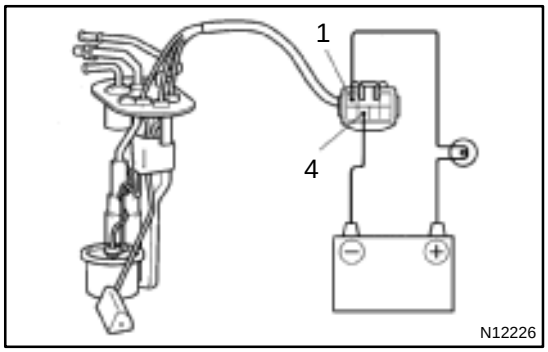

(b) Submerge the switch in fuel, and check that the bulb goes out.

If operation is not as specified, replace the sender gauge.

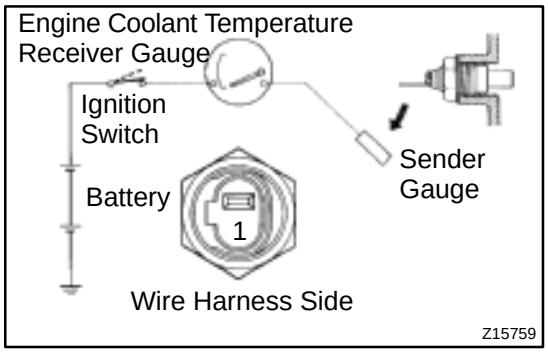

9. INSPECT ENGINE COOLANT TEMPERATURE RECEIVER GAUGE OPERATION

(a) Disconnect the connector from the sender gauge.

(b) Turn the ignition switch ON, and check that the receiver gauge needle indicates COOL.

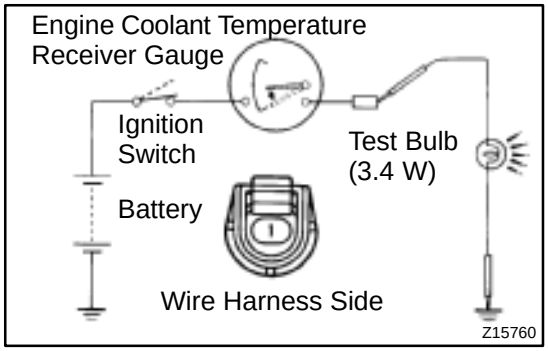

(c) Ground terminal on the wire harness side connecter through a 3.4 W test bulb.

(d) Turn the ignition switch ON, and check that the bulb lights up and the receiver gauge needle moves to the hot side.

If operation is as specified, replace the sender gauge. Then, recheck the system.

If operation is not as specified, measure the receiver gauge resistance.

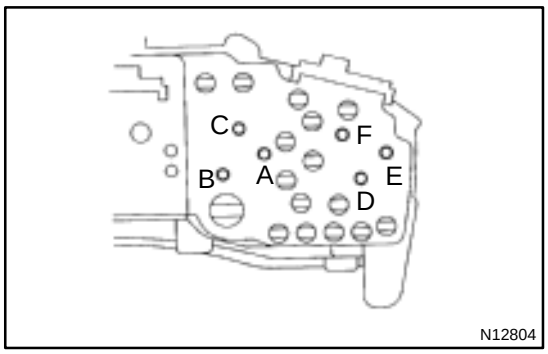

10. INSPECT ENGINE COOLANT TEMPERATURE RECEIVER GAUGE RESISTANCE

Measure the resistance between terminals.

Puerto Rico:

Between terminals	Resistance (Ω)
D – E	Approx. 51.0
D – F	Approx. 152.8
E – F	Approx. 203.8

Others:

Between terminals	Resistance (Ω)
D – E	Approx. 51.0
D – F	Approx. 148.6
E – F	Approx. 199.6

HINT:

Connect the test leads so that the current from the ohmmeter can flow according to the above order. This circuit includes the diode.

If resistance value is not as specified, replace the receiver gauge.

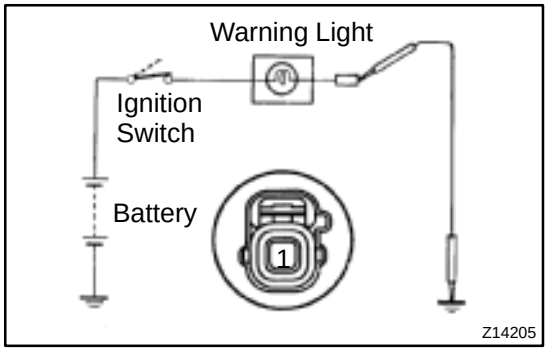

11. INSPECT LOW OIL PRESSURE WARNING LIGHT

(a) Disconnect the connector from the warning switch and ground terminal on the wire harness side connector.

(b) Turn the ignition switch ON, and check that the warning light lights up.

If the warning light does not light up, test the bulb.

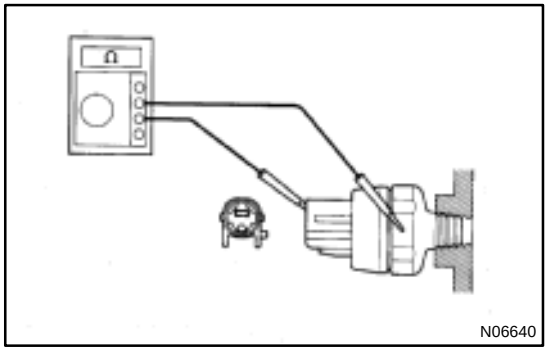

12. INSPECT LOW OIL PRESSURE SWITCH CONTINUITY

(a) Disconnect the connector from the switch.

(b) Check that there is continuity between terminals and ground with the engine stopped.

(c) Check that there is no continuity between terminals and ground with the engine running.

HINT:

Oil pressure should be over 30 kPa (0.3 kgf/cm^2, 4.4 psi).

If operation is not as specified, replace the switch.

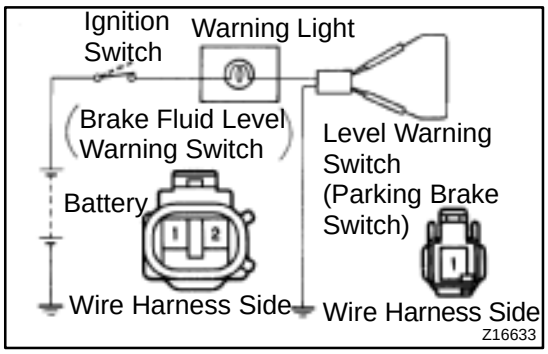

13. INSPECT BRAKE WARNING LIGHT

(a) Disconnect the connectors from the level warning switch and parking brake switch.

(b) Connect terminals on the wire harness side connector of the level warning switch connector.

(c) Turn the ignition switch ON, and check that the warning light lights up.

If the warning light does not light up, test the bulb.

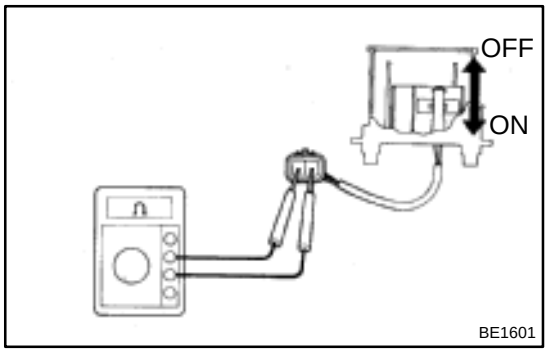

14. INSPECT BRAKE FLUID LEVEL WARNING SWITCH CONTINUITY

(a) Check that there is no continuity between terminals with the switch OFF (float up).

(b) Check that there is continuity between terminals with the switch ON (float down).

If operation is not as specified, replace the switch.

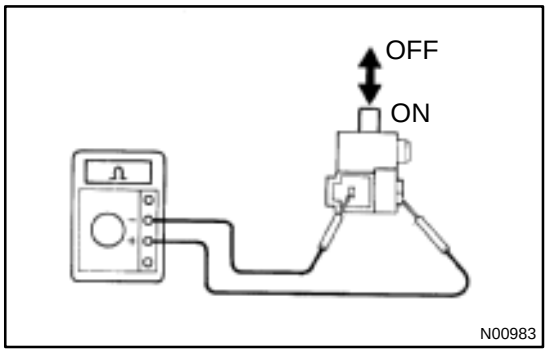

15. INSPECT PARKING BRAKE SWITCH CONTINUITY

(a) Check that there is continuity between terminals and switch body with the switch ON (switch pin released).

(b) Check that there is no continuity between terminals and switch body with the switch OFF (switch pin pushed in).

If operation is not as specified, replace the switch or inspect ground point.

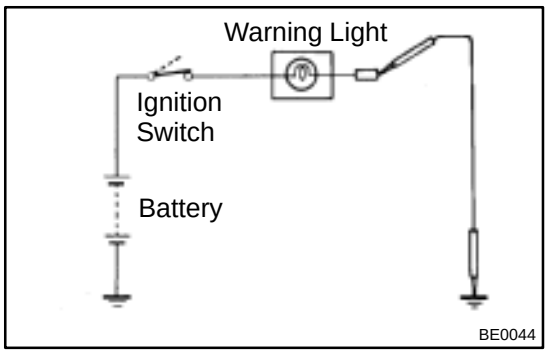

16. INSPECT OPEN DOOR WARNING LIGHT

(a) Disconnect the connectors from the door courtesy switch and ground terminal on the wire harness side connector.

(b) Turn the ignition switch ON, and check that the warning light lights up.

If the warning light does not light up, test the bulb.

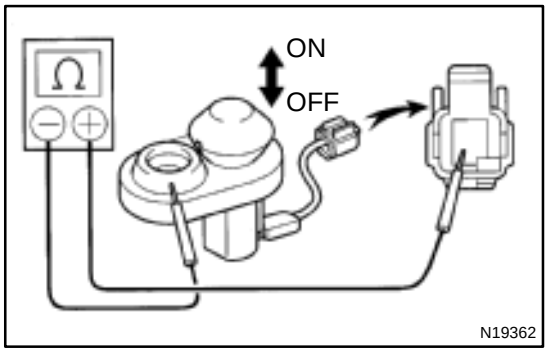

17. INSPECT DOOR COURTESY SWITCH CONTINUITY

(a) Check that there is continuity between terminals and the switch body with the switch ON (switch pin released: opened door).

(b) Check that there is no continuity between terminals and the switch body with the switch OFF (switch pin pushed in: closed doors).

If operation is not as specified, replace the switch.

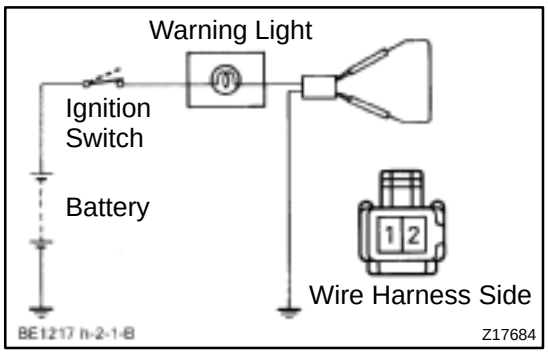

18. INSPECT SEAT BELT WARNING LIGHT

(a) Disconnect the connector from the driver's seat belt retractor assembly.
(b) Connect terminals 1 and 2 on the wire harness side connector.
(c) Turn the ignition switch ON, and check that the warning light lights up.

If the warning light does not light up, test the bulb.

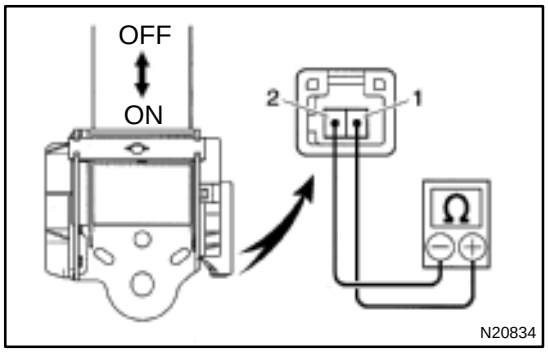

19. INSPECT RETRACTOR SWITCH CONTINUITY

(a) Check that there is continuity between terminals on the switch side connector with the switch ON (belt downward).
(b) Check that there is continuity between terminals on the switch side connector with the switch OFF (belt upward).

If continuity is not as specified, replace the retractor assembly.

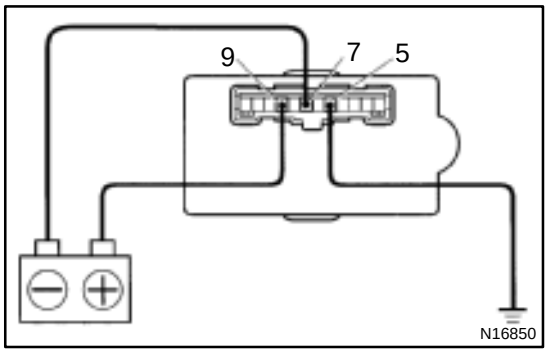

20. Seat Belt Warning Buzzer:
INSPECT INTEGRATION RELAY OPERATION

(a) Disconnect the connector from the integration relay and connect the positive (+) lead from the battery to terminal 9 and negative (–) lead to terminal 7.
(b) Connect the terminal 5 and body ground.
(c) Check the warning buzzer sounds.

If operation is not as specified, replace the relay.

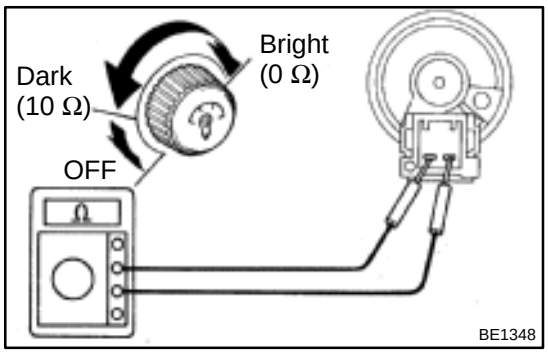

21. INSPECT LIGHT CONTROL RHEOSTAT

(a) Turn the rheostat knob OFF, and check that there is no continuity between terminals.(Rheostat knob turned to fully counterclockwise.)
(b) Gradually, turn the rheostat knob from the dark side to bright side, and check that the resistance decreases from 10 to 0 Ω.(Rheostat knob turned to clockwise.)

If operation is not as specified, replace the rheostat.

COMBINATION METER

BE0QC–01

LOCATION

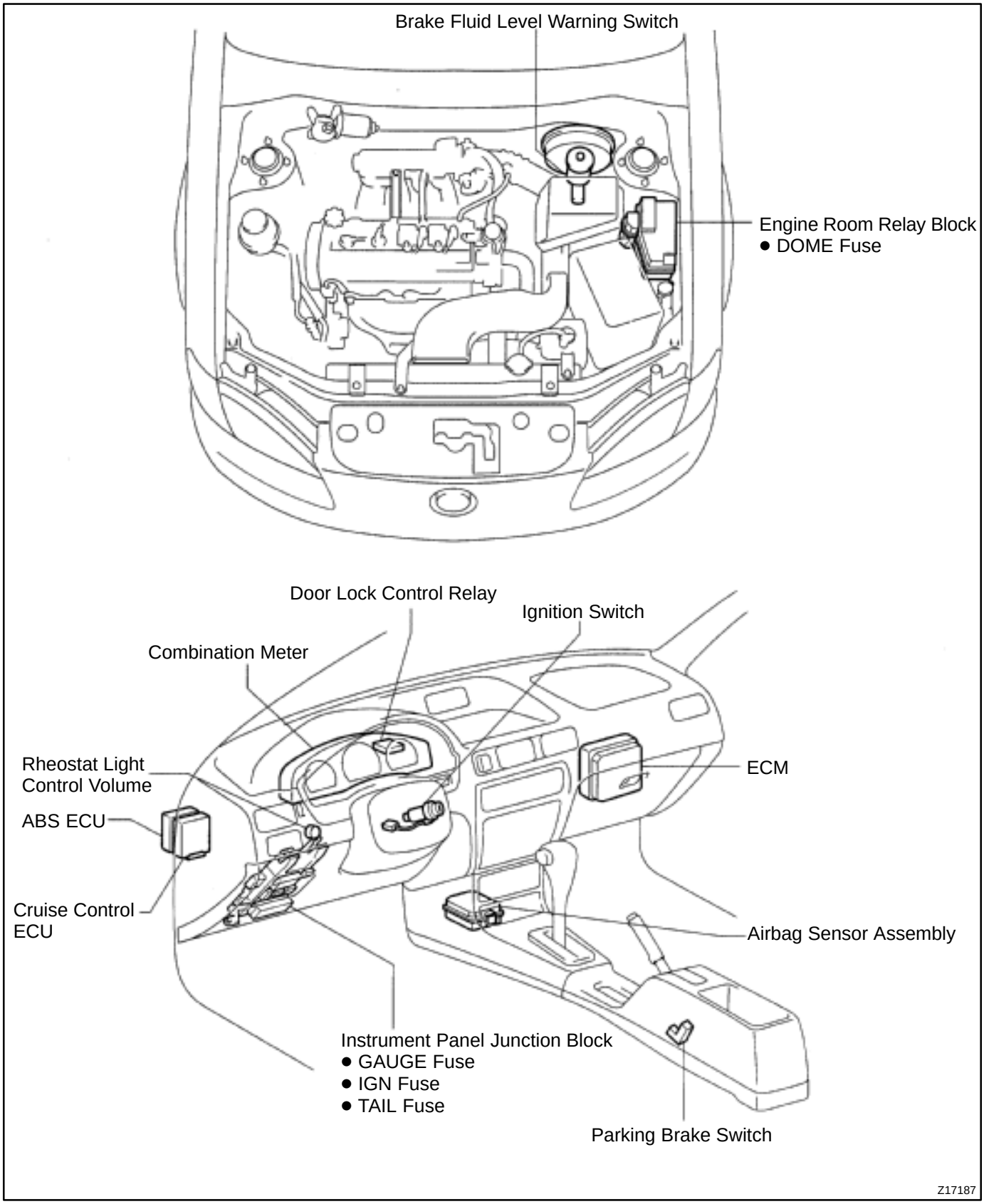

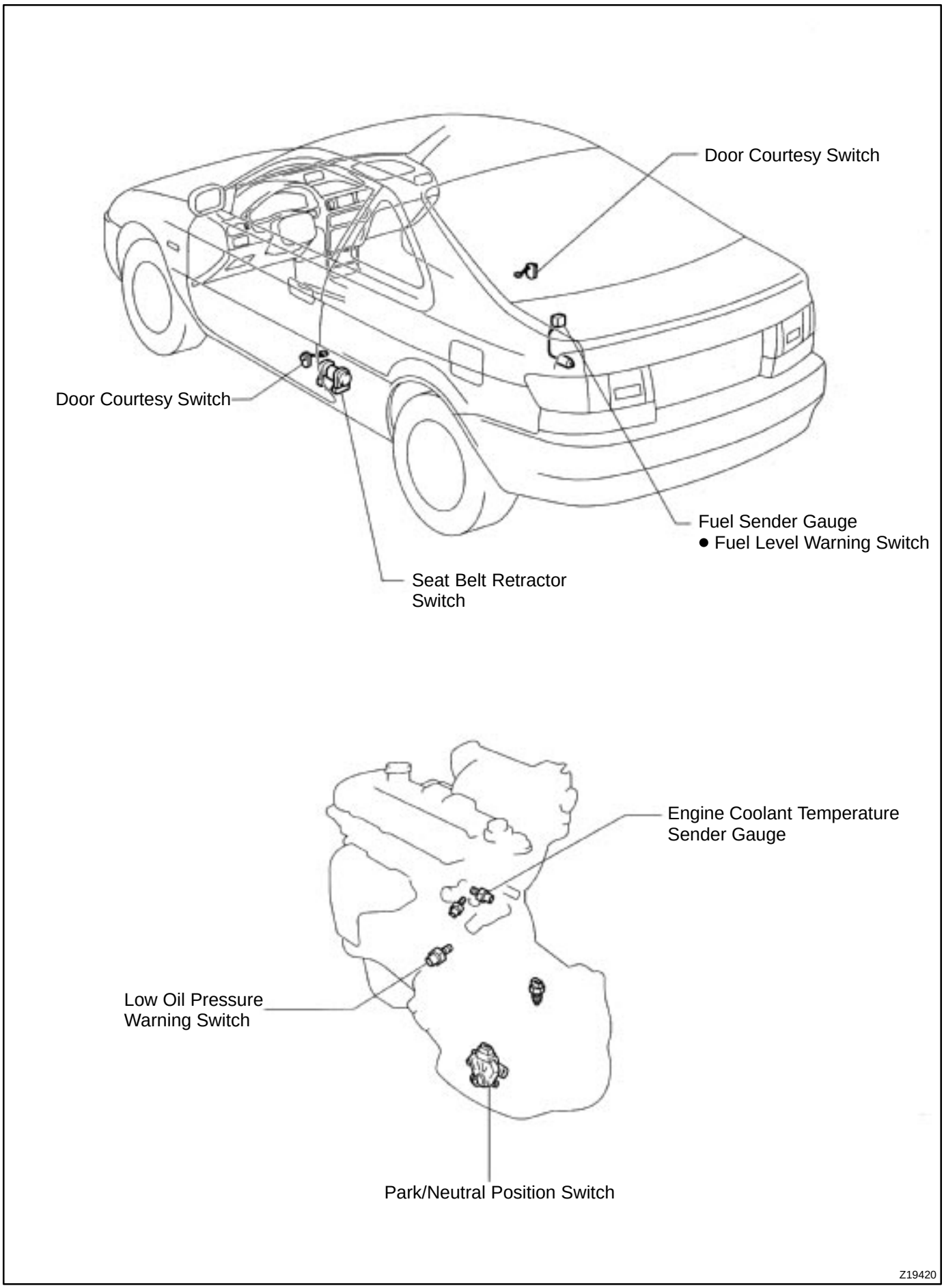
Door Courtesy Switch
Door Courtesy Switch
Fuel Sender Gauge
● Fuel Level Warning Switch
Seat Belt Retractor Switch
Engine Coolant Temperature Sender Gauge
Low Oil Pressure Warning Switch
Park/Neutral Position Switch
Z19420

BE0QG–02

INSPECTION

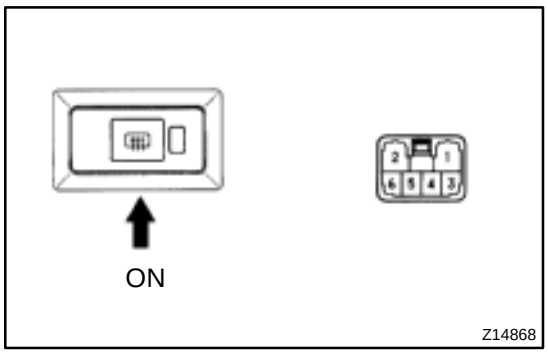

1. INSPECT DEFOGGER SWITCH CONTINUITY

Condition	Tester connection	Specified condition
Switch OFF	2 – 6	No continuity
Switch ON	2 – 4 – 6	Continuity
Illumination circuit	1 – 3	Continuity

If continuity is not as specified, replace the switch.

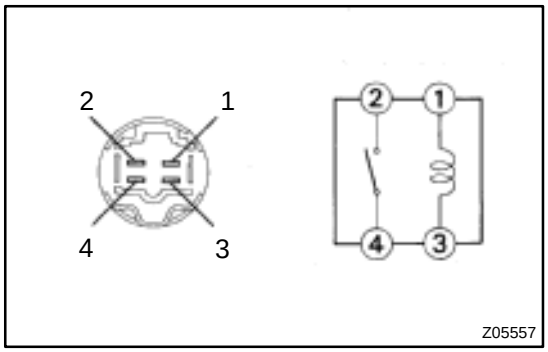

2. INSPECT DEFOGGER RELAY CONTINUITY

Condition	Tester connection	Specified condition
Constant	1 – 3	Continuity
Apply B+ between terminals 1 and 3.	2 – 4	Continuity

If continuity is not as specified, replace the relay.

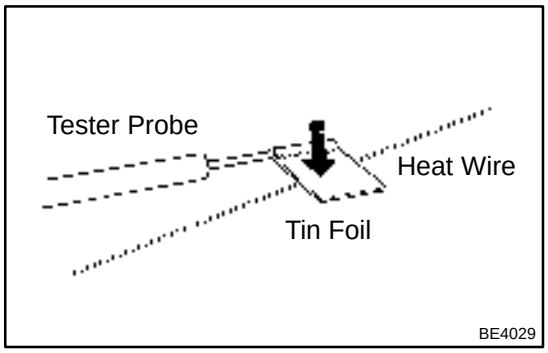

3. INSPECT DEFOGGER WIRE

NOTICE:

When cleaning the glass, use a soft, dry cloth, and wipe the glass in the direction of the wire. Take care not to damage the wires. Do not use detergents or glass cleaners with abrasive ingredients. When measuring voltage, wind a piece of tin foil around the top of the negative probe and press the foil against the wire with your finger, as shown.

(a) Turn the ignition switch ON.

(b) Turn the defogger switch ON.

(c) Inspect the voltage at the center of each heat wire, as shown.

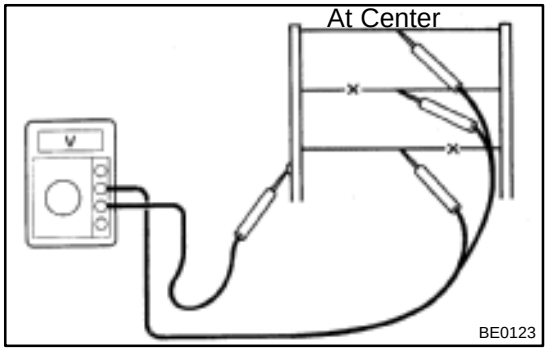

Voltage	Criteria
Approx. 5 V	Okay (No break in wire)
Approx.10 V or 0 V	Broken wire

HINT:

If there is approximately 10 V, the wire is broken between the center of the wire and the positive (+) end. If there is no voltage, the wire is broken between the center of the wire and ground.

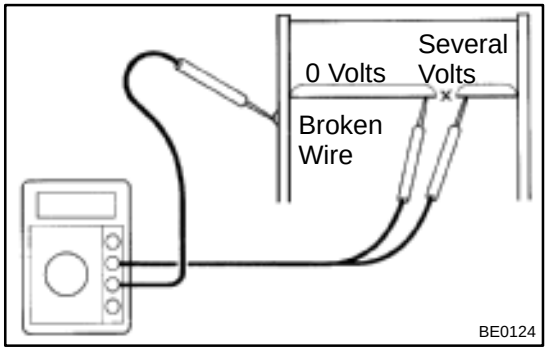

(d) Place the voltmeter positive (+) lead against the defogger positive (+) terminal.

(e) Place the voltmeter negative (–) lead with the foil strip against the heat wire at the positive (+) terminal end and slide it toward the negative (–) terminal end.

(f) The point where the voltmeter deflects from zero to several V is the place where the heat wire is broken.

HINT:
If the heat wire is not broken, the voltmeter indicates 0 V at the positive (+) end of the heat wire but gradually increases to about 12 V as the meter probe is moved to the other end.

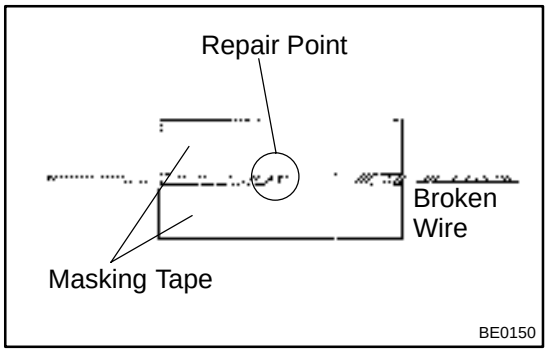

4. IF NECESSARY, REPAIR DEFOGGER WIRE

(a) Clean the broken wire tips with a grease, wax and silicone remover.

(b) Place the masking tape along both sides of the wire to be repaired.

(c) Thoroughly mix the repair agent (Dupont paste No. 4817).

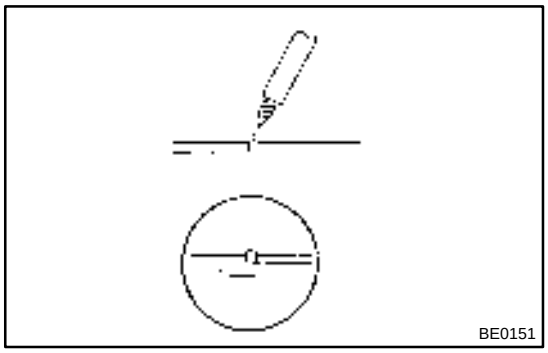

(d) Using a fine tip brush, apply a small amount to the wire.

(e) After a few minutes, remove the masking tape.

(f) Do not repair the defogger wire for at least 24 hours.

DEFOGGER SYSTEM

BE0QF–02

LOCATION

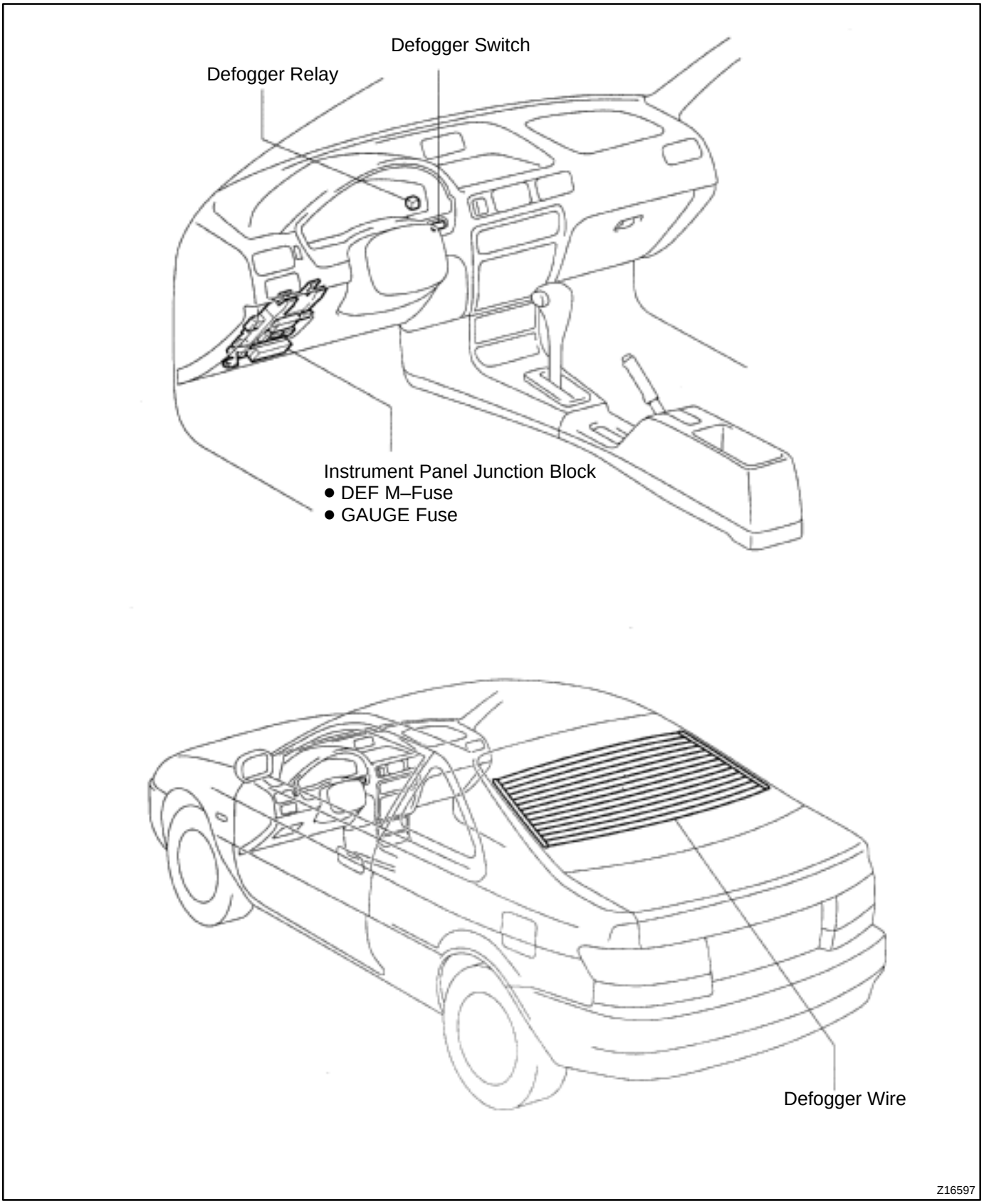

BE0Q1–03

ADJUSTMENT

1. ADJUST HEADLIGHT AIMING

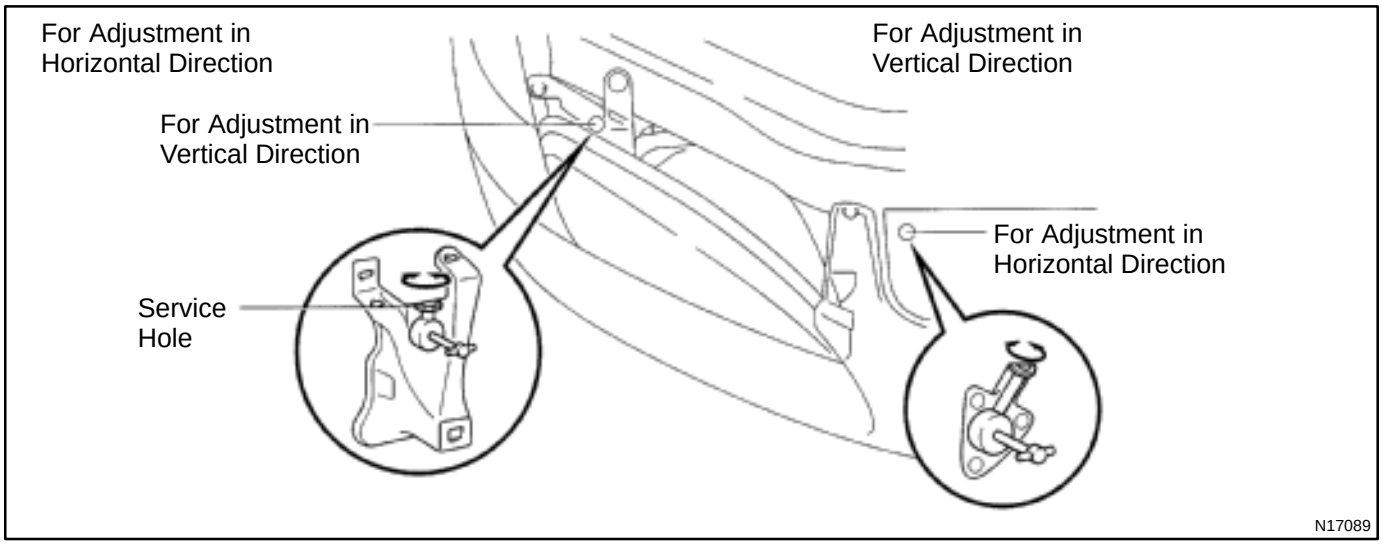

2. ADJUST SPIRAL CABLE

(See page SR–12)

BE0PZ–03

COMPONENTS

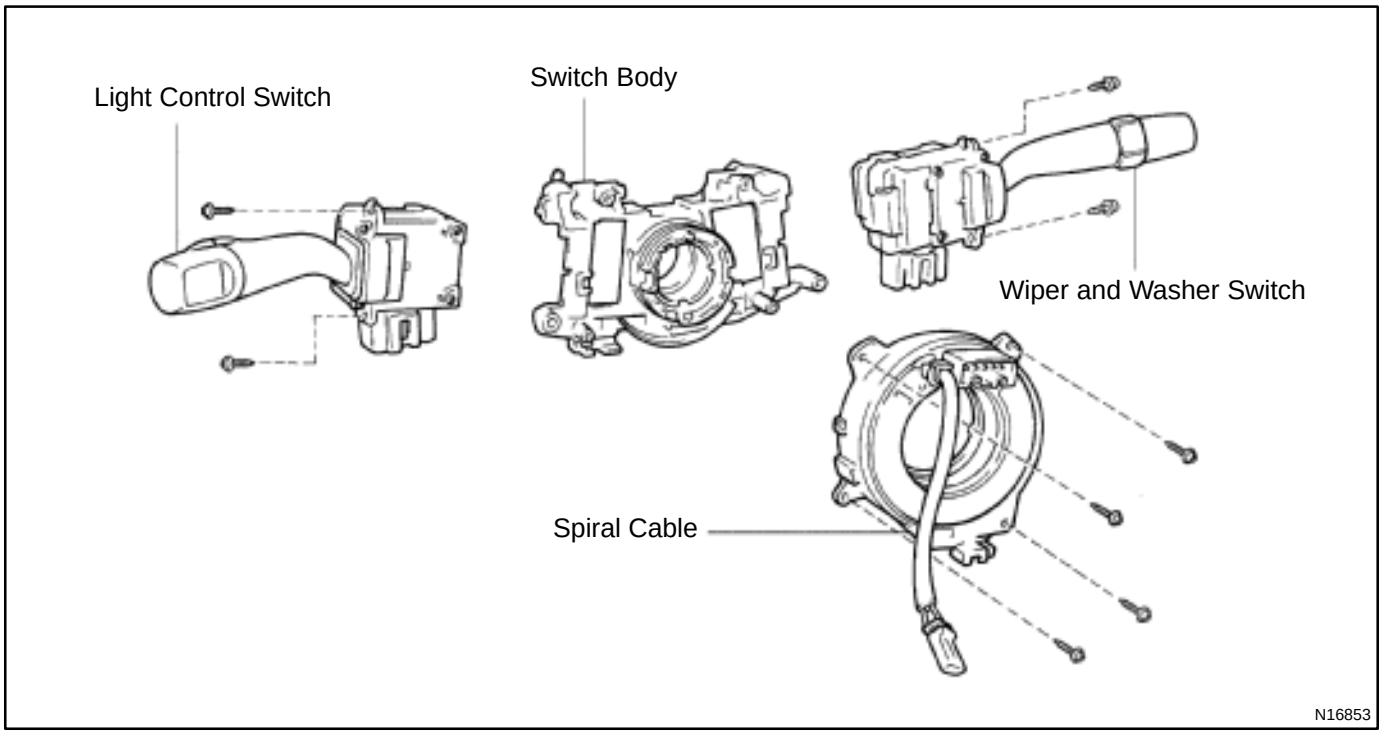

BE0Q0–02

INSPECTION

1. INSPECT LIGHT CONTROL SWITCH CONTINUITY

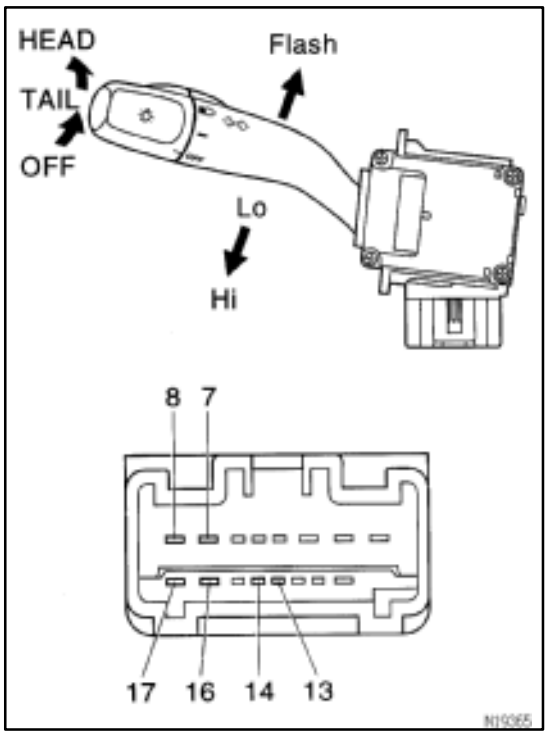

Switch position	Tester connection	Specified condition
OFF	–	No continuity
TAIL	14 – 16	Continuity
HEAD	13 – 14 – 16	Continuity

If continuity is not as specified, replace the switch.

2. INSPECT DIMMER SWITCH CONTINUITY

Switch position	Tester connection	Specified condition
Flash	7 – 8 – 16	Continuity
Low beam	16 – 17	Continuity
High beam	7 – 16	Continuity

If continuity is not as specified, replace the switch.

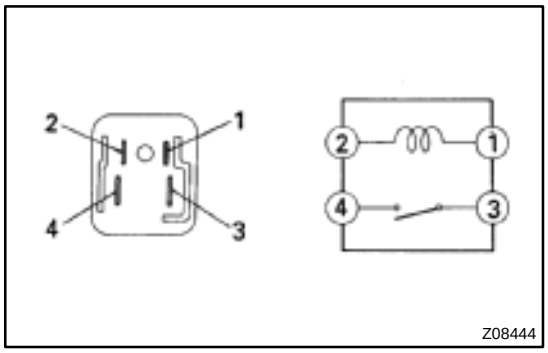

3. INSPECT HEADLIGHT CONTROL RELAY CONTINUITY

Condition	Tester connection	Specified condition
Constant	1 – 2	Continuity
Apply B+ between terminals 1 and 2.	3 – 4	Continuity

If continuity is not as specified, replace the relay.

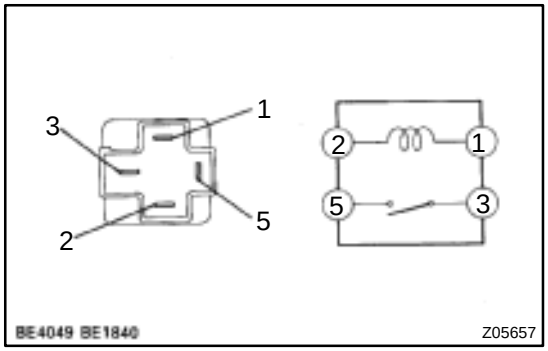

4. INSPECT TAILLIGHT CONTROL RELAY CONTINUITY

Condition	Tester connection	Specified condition
Constant	1 – 2	Continuity
Apply B+ between terminals 1 and 2.	3 – 5	Continuity

If continuity is not as specified, replace the relay.

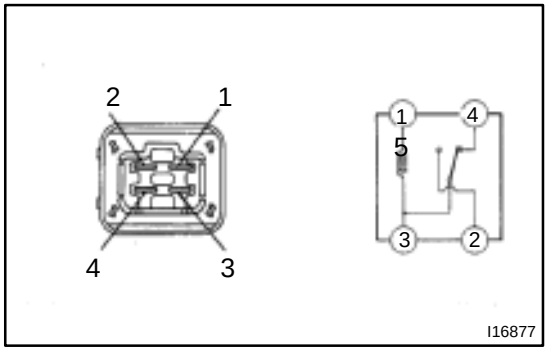

5. w/D.R.L.: INSPECT HEADLIGHT DIMMER RELAY CONTINUITY

Condition	Tester connection	Specified condition
Constant	1 – 3, 3 – 4	Continuity
Apply B+ between terminals 1 and 3.	2 – 3	Continuity

If continuity is not as specified, replace the relay.

Wire Harness Side



Z08448

6. w/ D.R.L.:

INSPECT D.R.L. MAIN RELAY CIRCUIT

Wire Harness Side:

Disconnect the connector from relay and inspect the connector on wire harness side, as shown.

Tester connection	Condition	Specified condition
5 – Ground	Light control switch position OFF or TAIL	No continuity
5 – Ground	Light control switch position HEAD	Continuity
7 – Ground	Headlight dimmer switch Low beam or High beam	No continuity
7 – Ground	Headlight dimmer switch Flash	Continuity
8 – Ground	Parking brake switch OFF (Parking brake lever released)	No continuity
8 – Ground	Parking brake switch ON (Parking brake lever pulled up)	Continuity
12 – Ground	Constant	Continuity
13 – Ground	Constant	Continuity
16 – Ground	Headlight dimmer switch Low beam	No continuity
16 – Ground	Headlight dimmer switch High beam or Flash	Continuity
2 – Ground	Ignition switch LOCK or ACC	No voltage
2 – Ground	Ignition switch ON or START	Battery positive voltage
6 – Ground	Constant	Battery positive voltage
11 – Ground	Engine Stop	No voltage
11 – Ground	Engine Running	Battery positive voltage

If circuit is as specified, try replacing the relay with a new one.
If the circuit is not as specified, inspect the circuit connected to other parts.

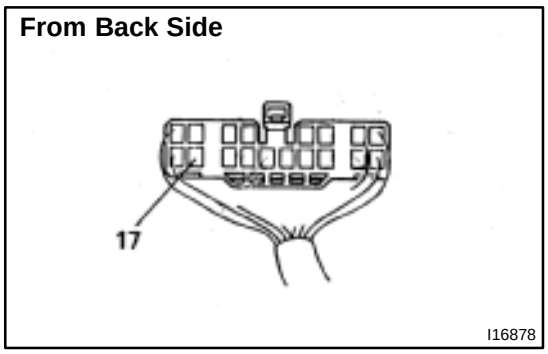

7. w/ D.R.L.:
INSPECT D.R.L. MAIN RELAY CIRCUIT
Connected Connector:

Connect the wire harness side connector to the relay and inspect wire harness side connector from the back side, as shown.

Tester connection	Condition	Specified condition
17 – Ground	* Headlight dimmer switch LO	No voltage
17 – Ground	* Headlight dimmer switch High or Flash	Battery positive voltage

* With light control switch turned to HEAD

If circuit is as specified, try replacing the relay with a new one.
If circuit is not as specified, inspect the circuit connected to other parts.

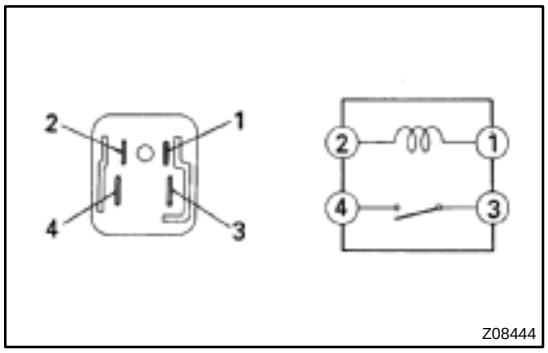

8. w/ D.R.L.:
INSPECT D.R.L. No.4 RELAY CONTINUITY

Condition	Tester connection	Specified condition
Constant	1 – 2	Continuity
Apply B+ between terminals 1 and 2.	3 – 4	Continuity

If continuity is not as specified, replace the relay.

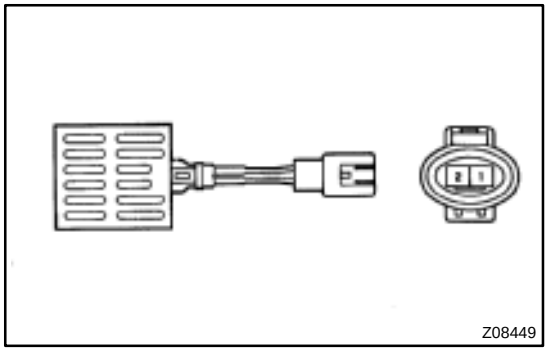

9. w/ D.R.L.:
INSPECT DAYTIME RESISTOR RESISTANCE

Condition	Tester connection	Specified condition
Constant	1 – 2	Approx. 250 MΩ

If resistance is not as specified, replace the resistor

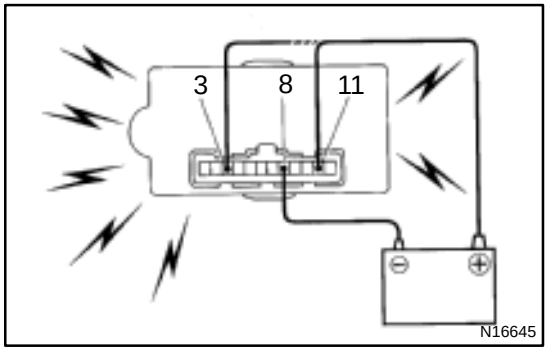

10. INSPECT INTEGRATION RELAY OPERATION

(a) Connect the positive (+) lead from the battery to terminal 3 and 11.
(b) Connect the negative (–) lead from the battery to terminals 8.
(c) Check that the chime sounds.
(d) Return to step (a), and operate the chime again.

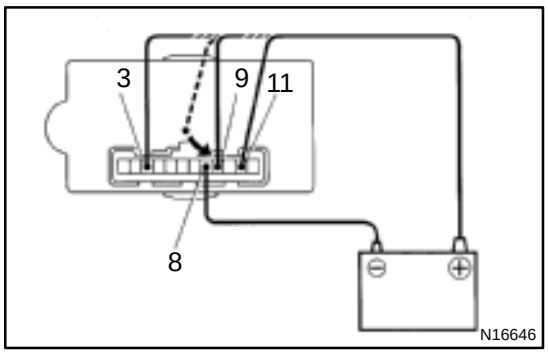

(e) Connect the positive (+) lead from the battery to terminal 9.

(f) Check that the chime stops sounding.

If operation is not as specified, replace the relay.

11. INSPECT INTEGRATION RELAY CIRCUIT
(See page BE–11)

HEADLIGHT AND TAILLIGHT SYSTEM

BE0PY–03

LOCATION

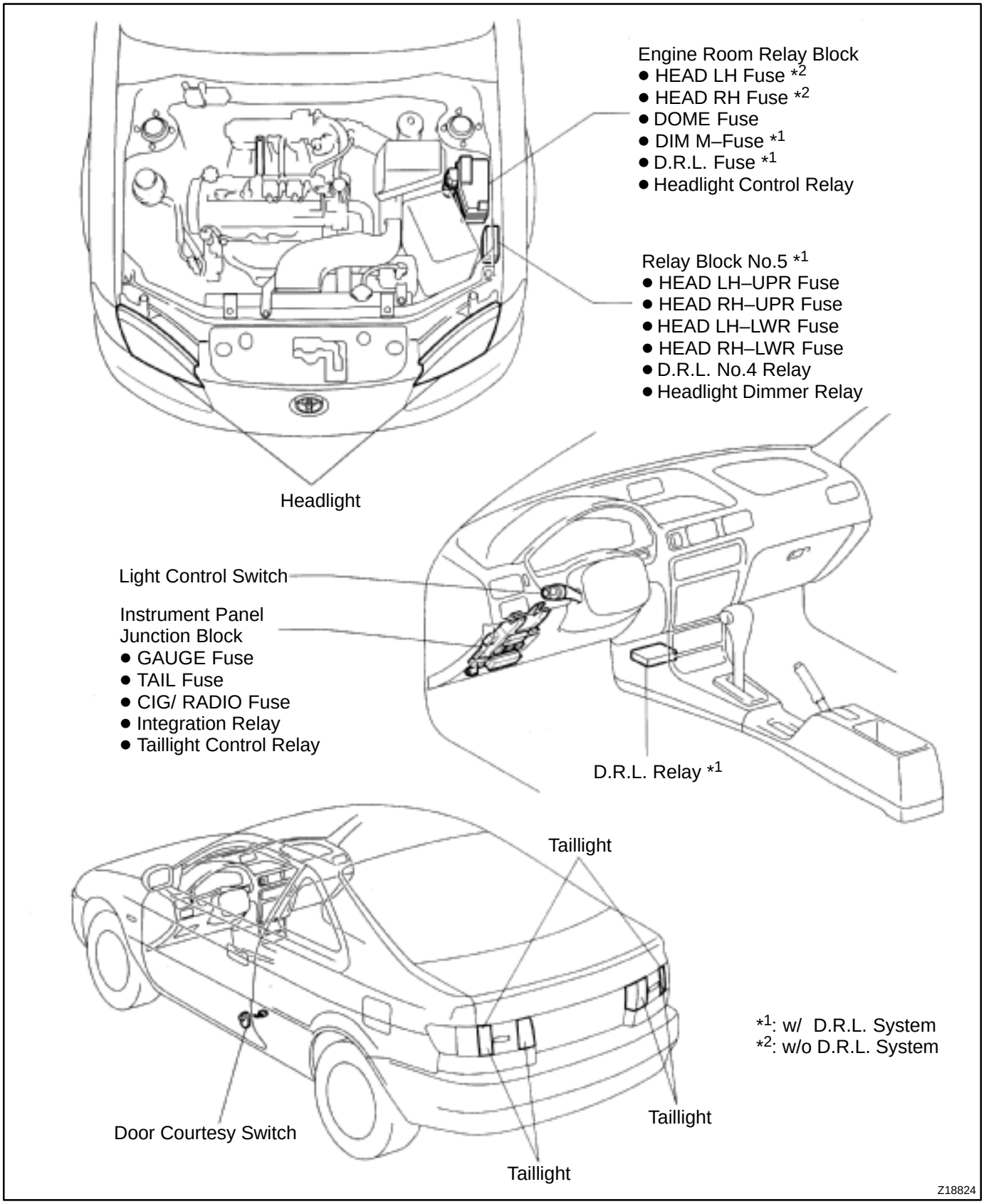

BE0Q5–01

INSPECTION

1. INSPECT DOOR COURTESY SWITCH CONTINUITY
(See page BE–35)

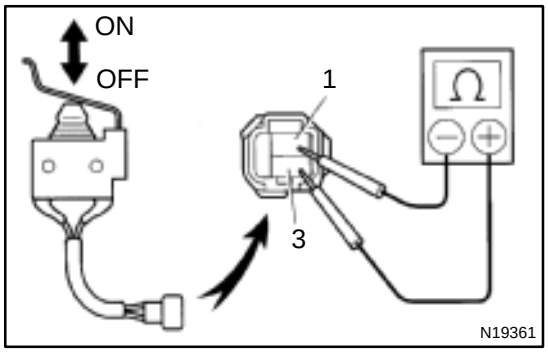

2. INSPECT LUGGAGE DOOR COURTESY SWITCH CONTINUITY

(a) Check that there is continuity between terminals on the switch side connector with the switch ON (switch pin released : opened door).

(b) Check that there is no continuity between terminals on the switch side connector with the switch OFF (switch pin pushed in : closed door).

If operation is not as specified, replace the switch.

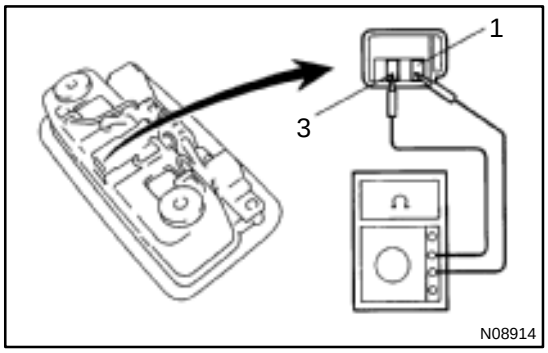

3. Interior Light Switch:
INSPECT MAP LIGHT ASSEMBLY CONTINUITY

Switch position	Tester connection	Specified condition
DOOR	1 – 3	Continuity
OFF	–	No continuity

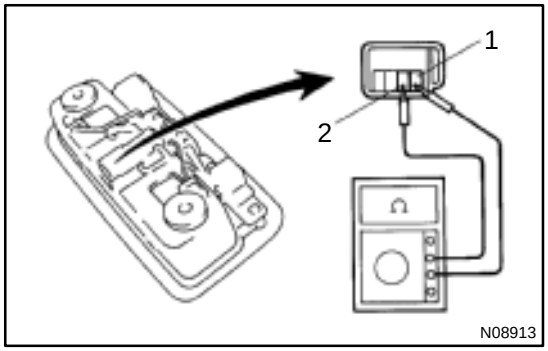

4. Map Light Switch:
INSPECT MAP LIGHT ASSEMBLY CONTINUITY

Switch position	Tester connection	Specified condition
OFF	–	No continuity
*ON	1 – 2	Continuity

* Set to the interior light switch to OFF or DOOR.

If continuity is not as specified, replace the light assembly or bulb.

INTERIOR LIGHT SYSTEM

LOCATION

BE0Q4–01

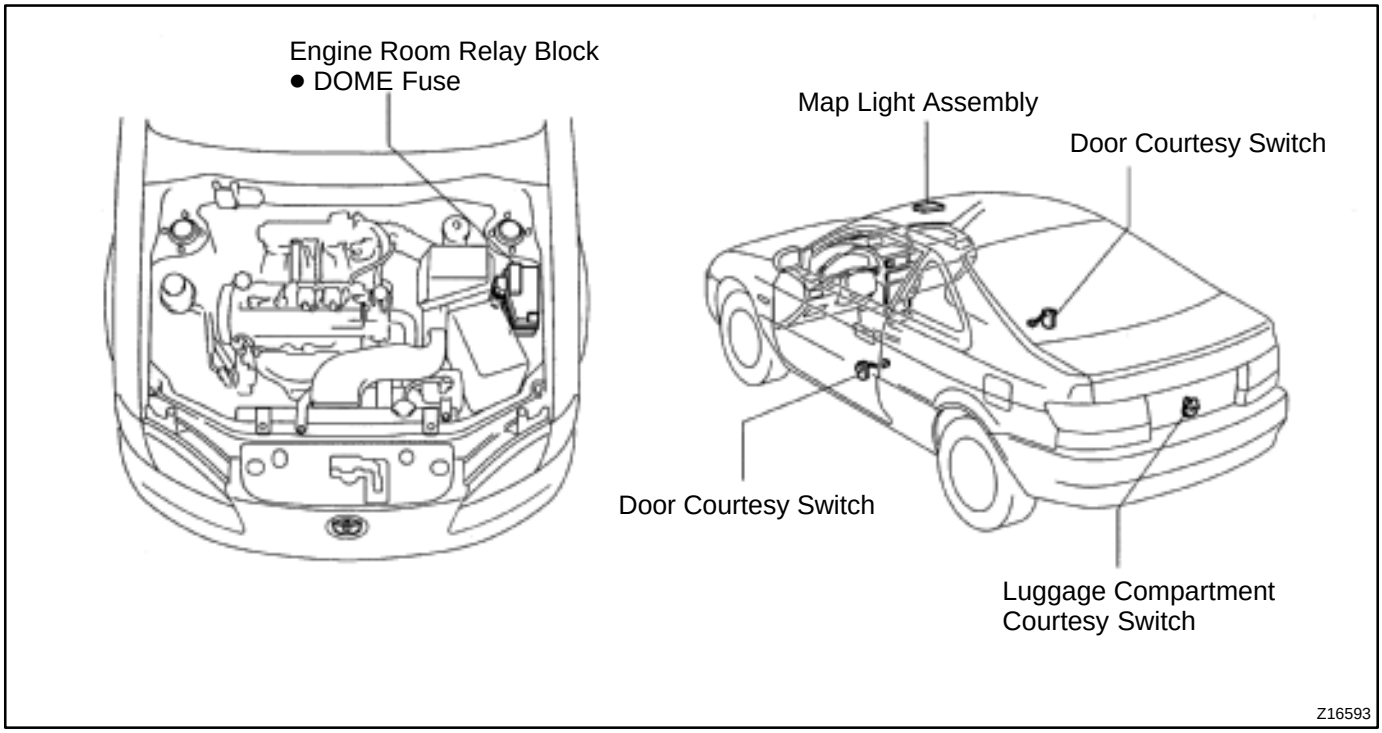

BE0PX–03

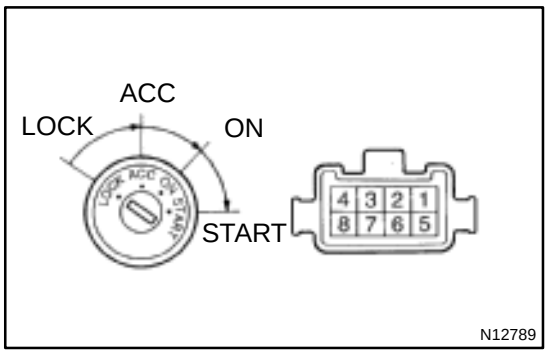

INSPECTION

1. INSPECT IGNITION SWITCH CONTINUITY

Switch position	Tester connection	Specified condition
LOCK	–	No continuity
ACC	2 – 3	Continuity
ON	2 – 3 – 4 6 – 7	Continuity
START	1 – 2 – 4 6 – 7 – 8	Continuity

If continuity is not as specified, replace the switch.

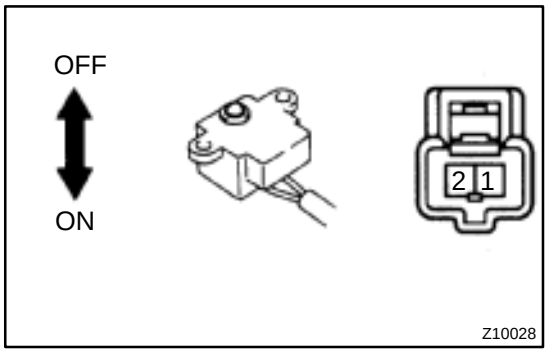

2. INSPECT KEY UNLOCK WARNING SWITCH CONTINUITY

Condition	Tester connection	Specified condition
Switch OFF (Key removed)	–	No continuity
Switch ON (Key set)	1 – 2	Continuity

If continuity is not as specified, replace the switch.

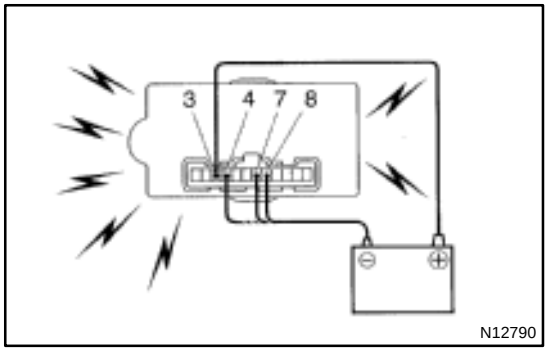

3. INSPECT INTEGRATION RELAY OPERATION

(a) Connect the positive (+) lead from the battery to terminal 3.

(b) Connect the negative (–) lead from the battery to terminal 4 and 8.

(c) Check the chime sounds.

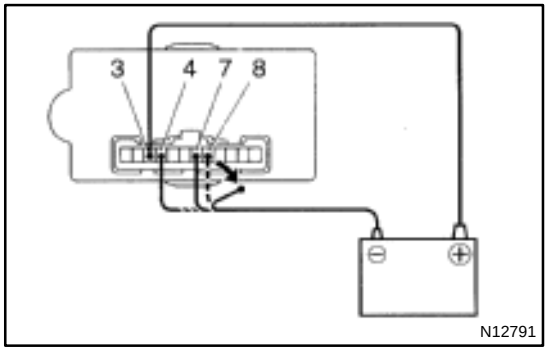

(d) Disconnect the negative (–) lead from the battery to terminal 8.

(e) Check that the chime stops sounding.

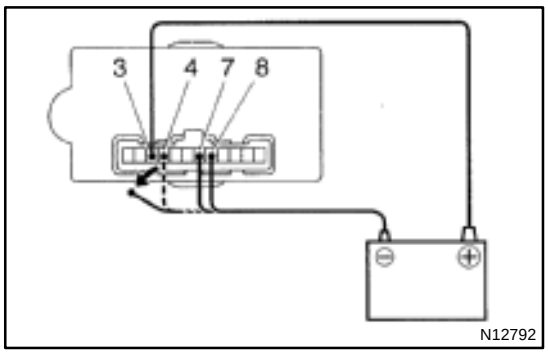

(f) Connect the negative (–) lead from the battery to terminal 8.
(g) Disconnect the negative (–) lead from the battery to terminal 4.
(h) Check that the chime stops sounding.

If operation is not as specified, replace the relay.

Junction Block Side

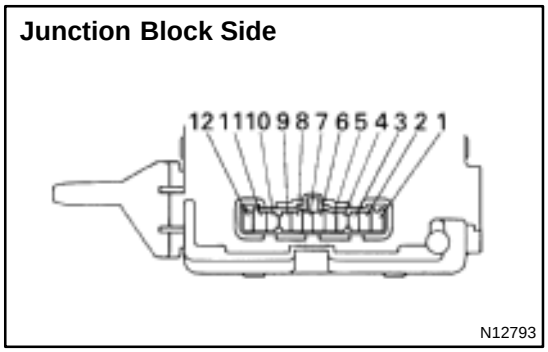

4. INSPECT INTEGRATION RELAY CIRCUIT

Remove the relay from the instrument panel junction block and inspect the connectors on the junction block side.

Tester connection	Condition	Specified condition
4 – Ground	Key unlock warning switch OFF	No continuity
4 – Ground	Key unlock warning switch ON	Continuity
8 – Ground	Driver's door courtesy switch OFF	No continuity
8 – Ground	Driver's door courtesy switch ON	Continuity
11 – Ground	Light control switch OFF	No continuity
11 – Ground	Light control switch TAIL or HEAD	Continuity
3 – Ground	Constant	Battery positive voltage
9 – Ground	Ignition switch LOCK or ACC	No voltage
9 – Ground	Ignition switch ON	Battery positive voltage
12 – Ground	Constant	Battery positive voltage

If the circuit is as specified, try replacing the relay with a new one.

If the circuit is not as specified, inspect the circuits connected to other parts.

IGNITION SWITCH AND KEY UNLOCK WARNING SWITCH

BE0PW–01

LOCATION

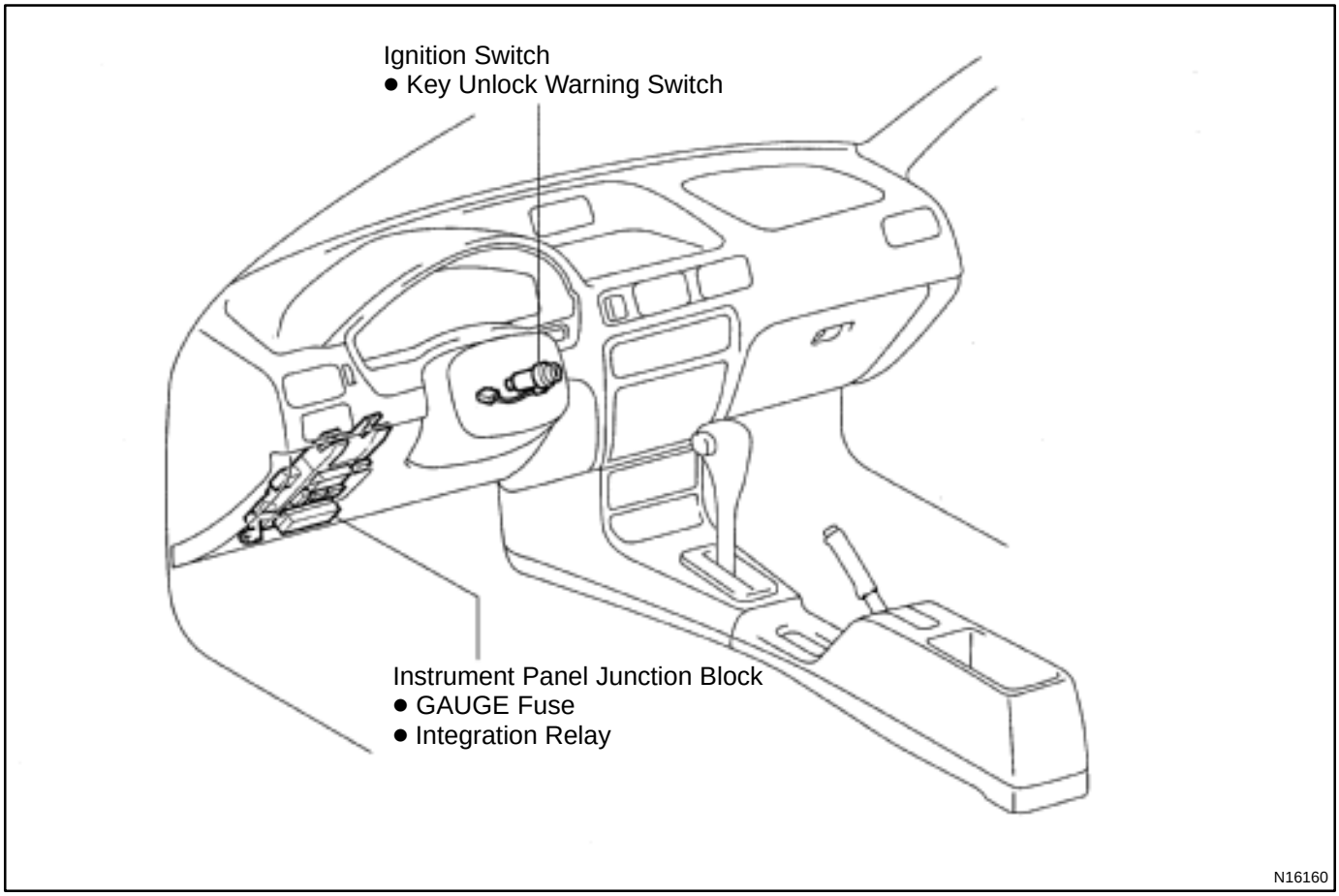

BE0QK–02

INSPECTION

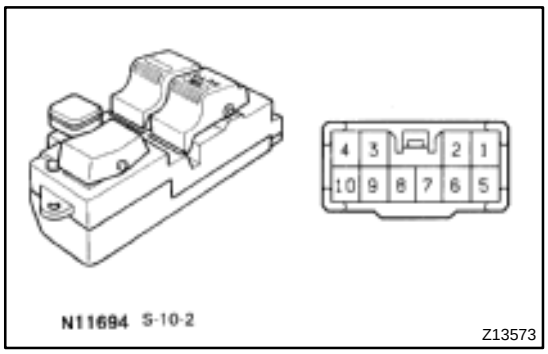

1. INSPECT DRIVER'S DOOR LOCK CONTROL SWITCH CONTINUITY

Switch position	Tester connection	Specified condition
LOCK	1 – 5 2 – 6	Continuity
OFF	–	No continuity
UNLOCK	1 – 6 2 – 5	Continuity

If continuity is not as specified, replace the switch.

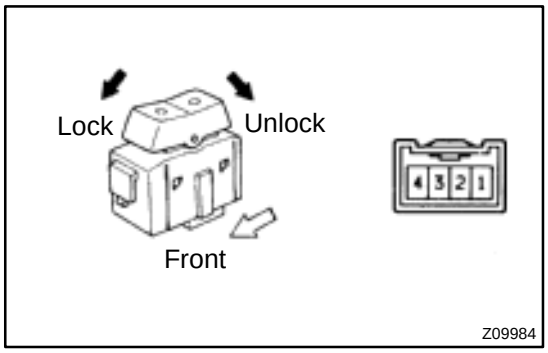

2. INSPECT PASSENGER'S DOOR LOCK CONTROL SWITCH CONTINUITY

Switch position	Tester connection	Specified condition
LOCK	3 – 4	Continuity
OFF	–	No continuity
UNLOCK	2 – 4	Continuity

If continuity is not as specified, replace the switch.

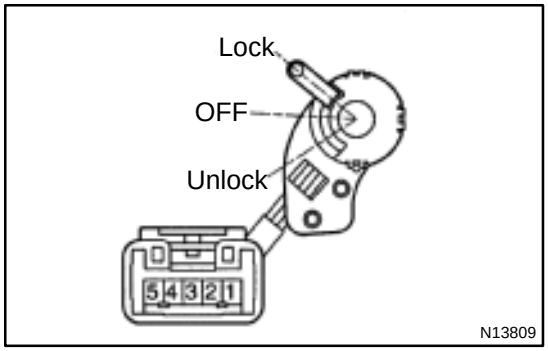

3. INSPECT DOOR KEY LOCK AND UNLOCK SWITCH CONTINUITY

Switch position	Tester connection	Specified condition
LOCK	2 – 3	Continuity
OFF	–	No continuity
UNLOCK	1 – 2	Continuity

If continuity is not as specified, replace the switch.

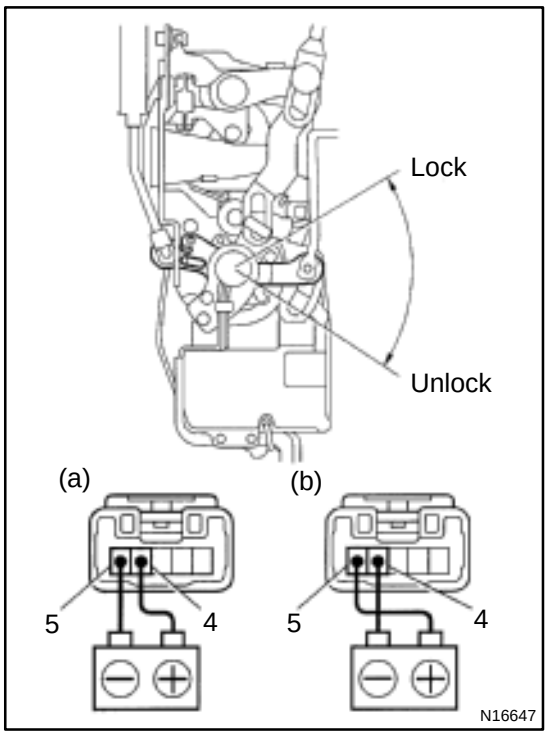

4. INSPECT DOOR LOCK MOTOR OPERATION

(a) Connect the positive (+) lead from the battery to terminal 4 and the negative (–) lead to terminal 5, the check that the door lock link moves to UNLOCK position.

(b) Reverse the polarity, the check that the door lock link moves to LOCK position.

If operation is not as specified, replace the door lock assembly.

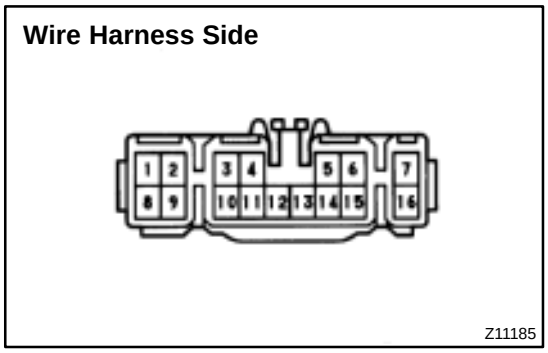

5. INSPECT DOOR LOCK CONTROL RELAY CIRCUIT

Disconnect the connector from the relay and inspect the connector on the wire harness side, as shown in the chart.

If the circuit is not as specified, inspect the circuits connected to other parts.

Tester connection	Condition	Specified condition
10 – Ground	Door lock control switch UNLOCK	No continuity
10 – Ground	Door lock control switch LOCK	Continuity
11 – Ground	Door lock control switch LOCK	No continuity
11 – Ground	Door lock control switch UNLOCK	Continuity
16 – Ground	Constant	Continuity
8 – Ground	Constant	Battery positive voltage

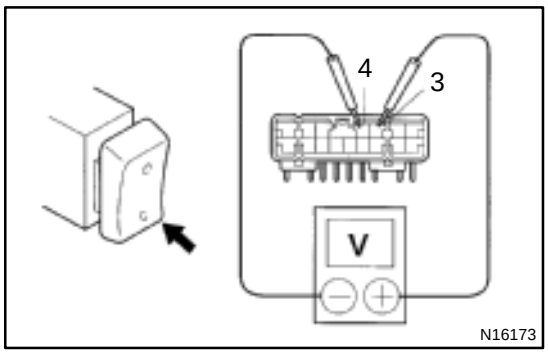

6. Door Lock Signal:
INSPECT DOOR LOCK CONTROL RELAY OPERATION

HINT:

When the relay circuit is as specified, inspect the door lock signal.

(a) Connect the connector to the relay.
(b) Connect the positive (+) lead from the voltmeter to terminal 3 and the negative (–) lead to terminal 4.
(c) Set the door lock manual switch to UNLOCK, and check that the voltage rises from 0 V to battery positive voltage for approximately 0.2 seconds.

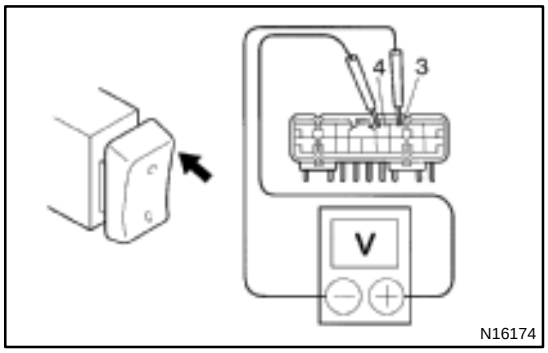

(d) Reverse the polarity of the voltmeter leads.
(e) Set the door lock manual switch to LOCK, and check that the voltage rises from 0 V to battery positive voltage for approximately 0.2 seconds.

If operation is not as specified, replace the relay.

POWER DOOR LOCK CONTROL SYSTEM

BE0QJ–01

LOCATION

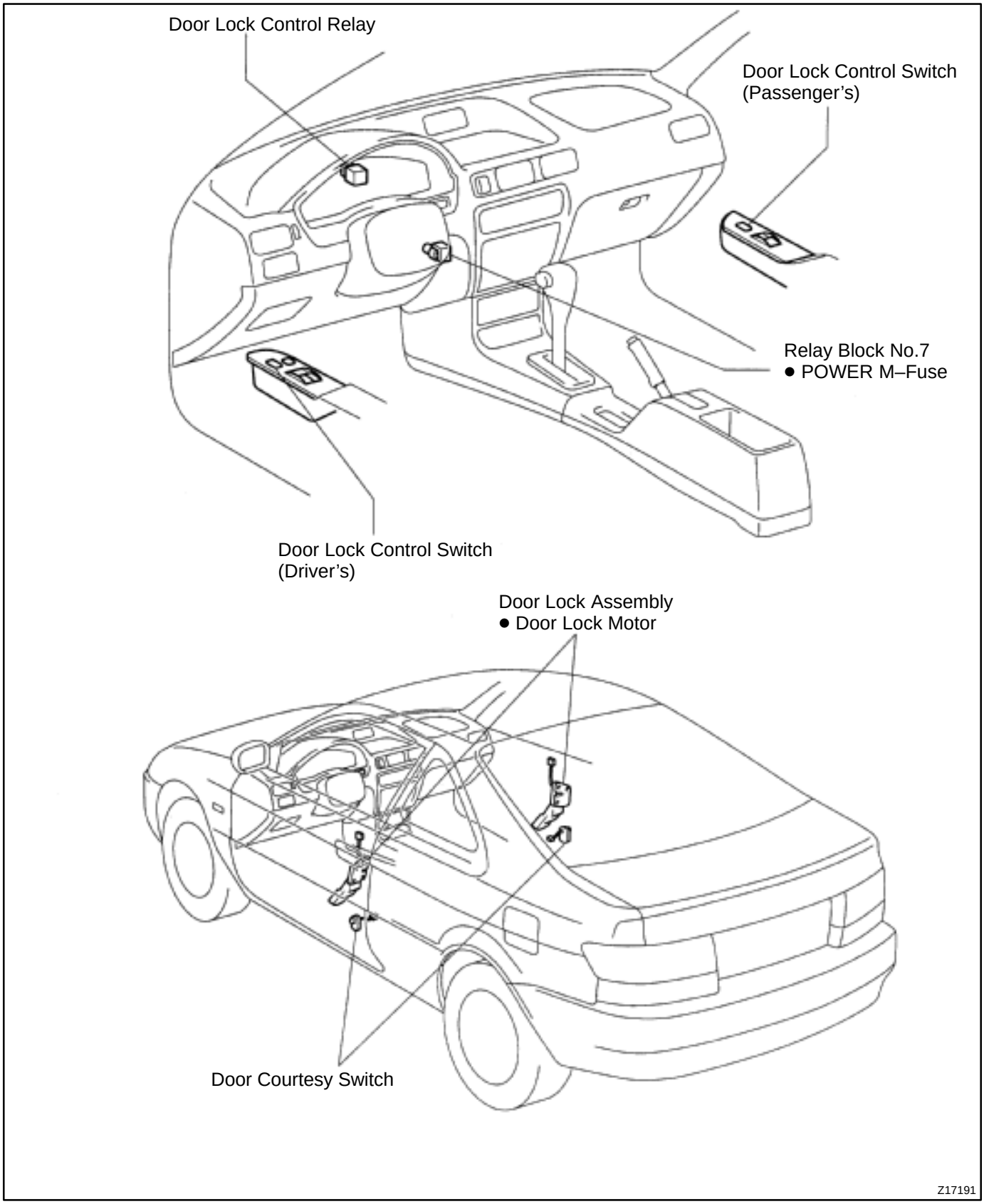

POWER SOURCE

BE0PV–01

LOCATION

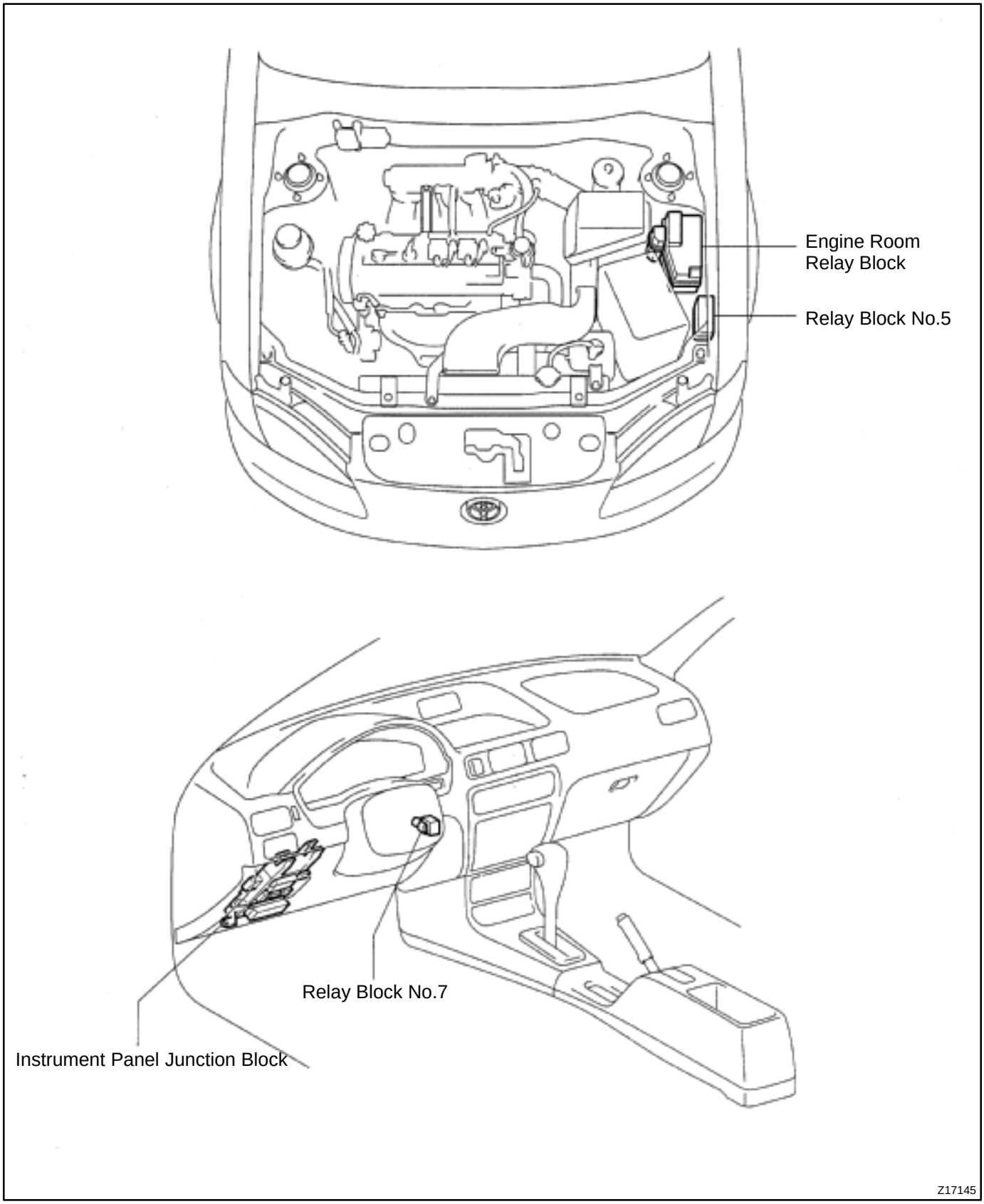

BE0QI–01

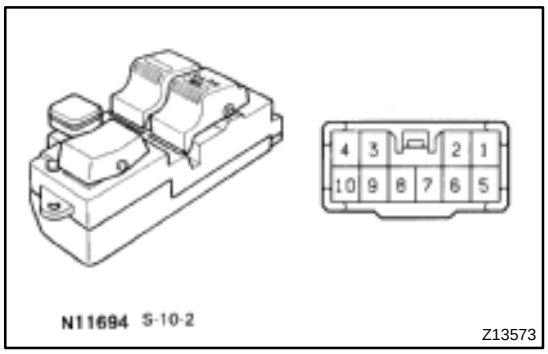

INSPECTION

1. INSPECT POWER WINDOW MASTER SWITCH CONTINUITY

Driver's Switch

Switch position	Tester connection	Specified condition
UP	3 – 9 4 – 6	Continuity
OFF	3 – 4 – 6	Continuity
DOWN	3 – 6 4 – 9	Continuity

Passenger's Switch: Window unlock

Switch position	Tester connection	Specified condition
UP	6 – 7 9 – 10	Continuity
OFF	6 – 7 – 10	Continuity
DOWN	7 – 9 6 – 10	Continuity

Passenger's Switch: Window lock

Switch position	Tester connection	Specified condition
UP	9 – 10	Continuity
OFF	7 – 10	Continuity
DOWN	7 – 9	Continuity

If continuity is not as specified, replace the switch.

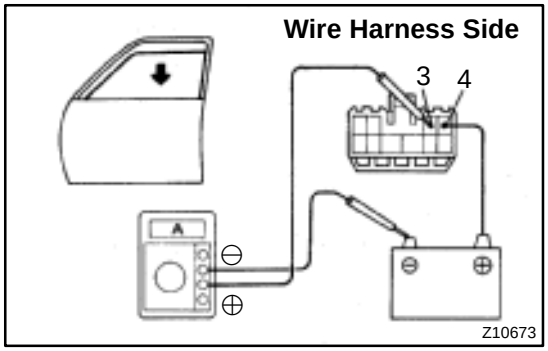

2. Using an ammeter:
INSPECT ONE TOUCH POWER WINDOW SYSTEM

(a) Disconnect the connector from the master switch.
(b) Connect the positive (+) lead from the ammeter to terminal 3 on the wire harness side connector and the negative (–) lead to the negative (–) terminal of the battery.
(c) Connect the positive (+) lead from the battery to terminal 4 on the wire harness side connector.

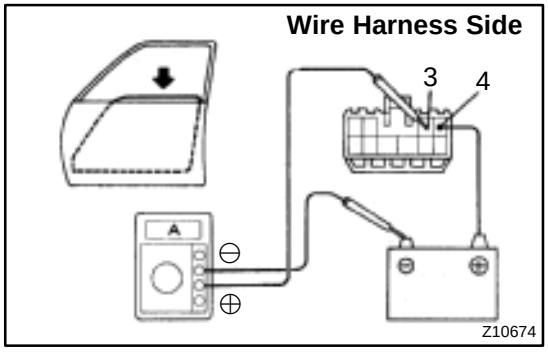

(d) As the window goes down, check that the current is approximately 7 A.
(e) Check that the current increases up to approximately 14.5 A or more when the window stops going down.

HINT:
The circuit breaker opens some 4 – 40 seconds after the window stops going down, so that check must be made before the circuit breaker operates.

If operation is not as specified, replace the master switch.

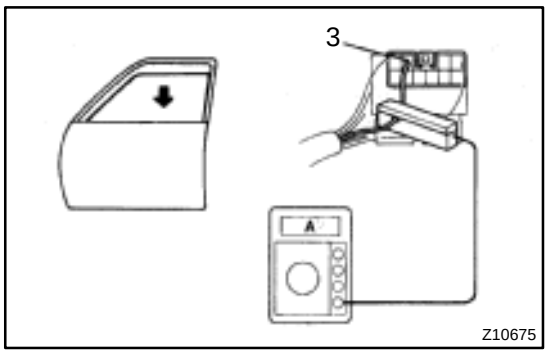

3. Using an ammeter with a current–measuring probe: INSPECT ONE TOUCH POWER WINDOW SYSTEM

(a) Remove the master switch with connector connected.

(b) Attach a current–measuring probe to terminal 3 of the wire harness.

(c) Turn the ignition switch ON, and set the power window switch in the down position.

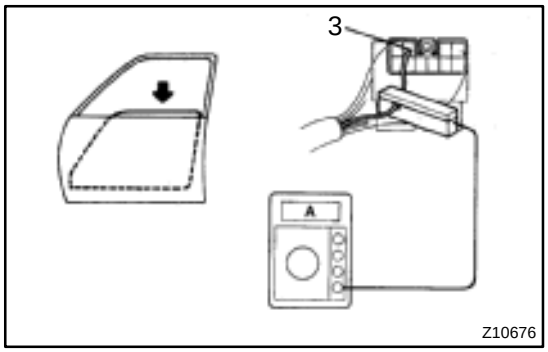

(d) As the window goes down, check that the current is approximately 7 A.

(e) Check that the current increases up to approximately 14.5 A or more when the window stops going down.

HINT:

The circuit breaker opens some 4 – 40 seconds after the window stops going down, so that check must be made before the circuit breaker operates.

If operation is not as specified, replace the master switch.

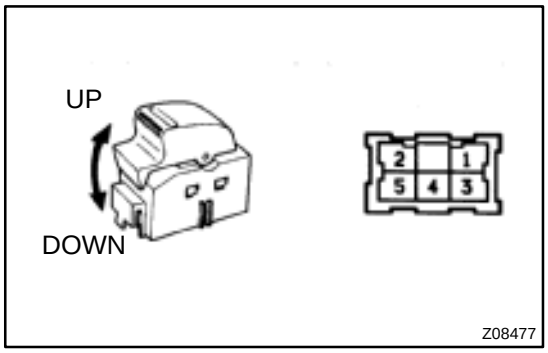

4. INSPECT POWER WINDOW SWITCH CONTINUITY

Switch position	Tester connection	Specified condition
UP	1 – 5 3 – 4	Continuity
OFF	1 – 2 3 – 4	Continuity
DOWN	1 – 2 4 – 5	Continuity

If continuity is not as specified, replace the switch.

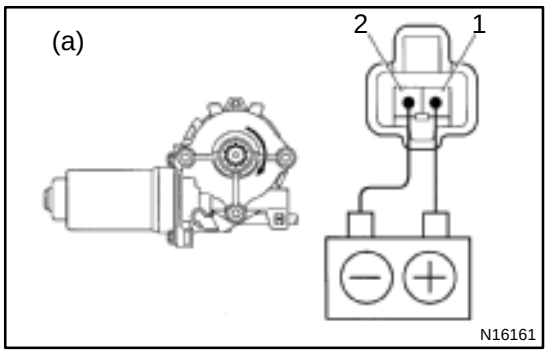

5. Driver's Door: INSPECT POWER WINDOW MOTOR OPERATION

(a) Connect the positive (+) lead from the battery to terminal 1 and the negative (–) lead to terminal 2, and check that the motor turns clockwise.

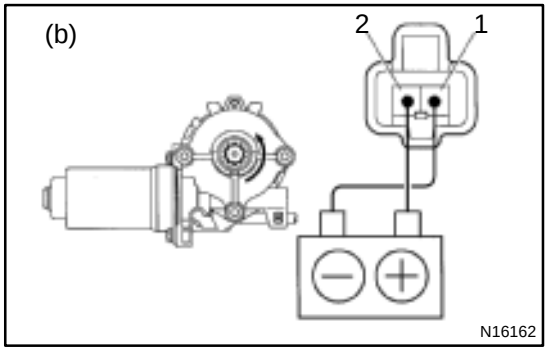

(b) Reverse the polarity, and check that the motor turns counterclockwise.

If operation is not as specified, replace the motor.

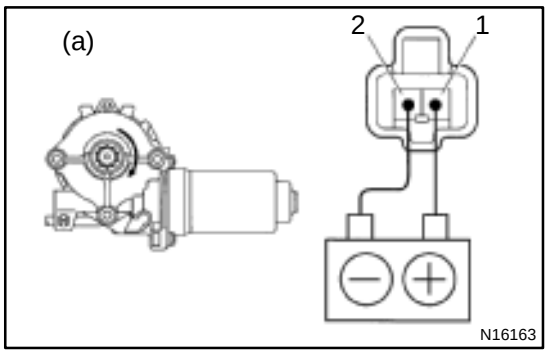

6. Passenger's Door:
INSPECT POWER WINDOW MOTOR OPERATION

(a) Connect the positive (+) lead from the battery to terminal 1 and the negative (–) lead to terminal 2, and check that the motor turns clockwise.

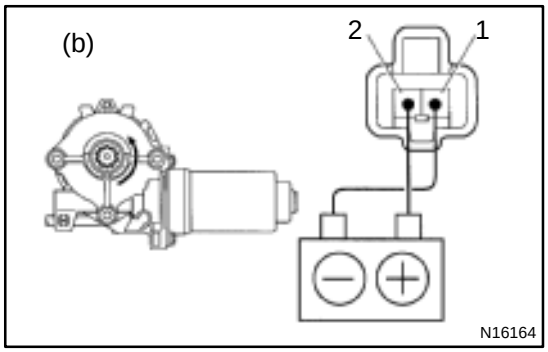

(b) Reverse the polarity, and check that the motor turns counterclockwise.

If operation is not as specified, replace the motor.

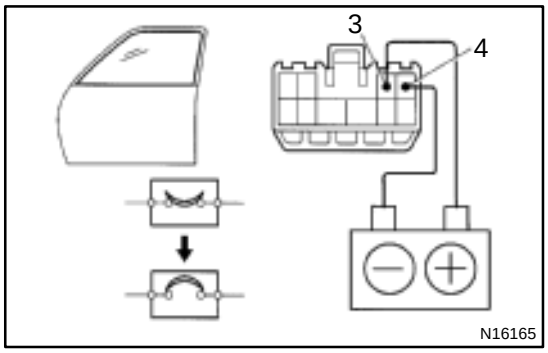

7. Driver's Door:
INSPECT CIRCUIT BREAKER OPERATION

(a) Disconnect the connector from the power window switch.
(b) Connect the positive (+) lead from the battery to terminal 3 and the negative (–) lead to terminal 4 on the wire harness side connector, and raise the window to full closed position.
(c) Continue to apply voltage, and check that the current changes from approximately 14 A to less than 1 A within 4 to 90 seconds.
(d) Disconnect the leads from terminals.
(e) Approximately 90 seconds later, connect the positive (+) lead from the battery to terminal 4 and negative (–) lead to terminal 3, and check that the window begins to descend.

If operation is not as specified, replace the motor.

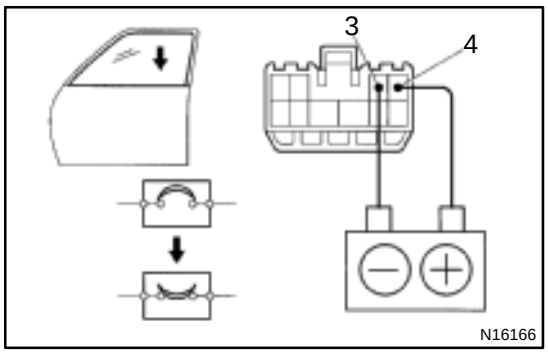

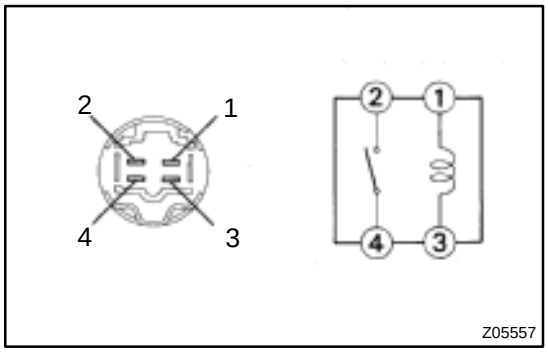

8. INSPECT POWER MAIN RELAY CONTINUITY

Condition	Tester connection	Specified condition
Constant	1 – 3	Continuity
Apply B+ between terminals 1 and 3.	2 – 4	Continuity

If continuity is not as specified, replace the relay.

POWER WINDOW CONTROL SYSTEM

BE0QH–01

LOCATION

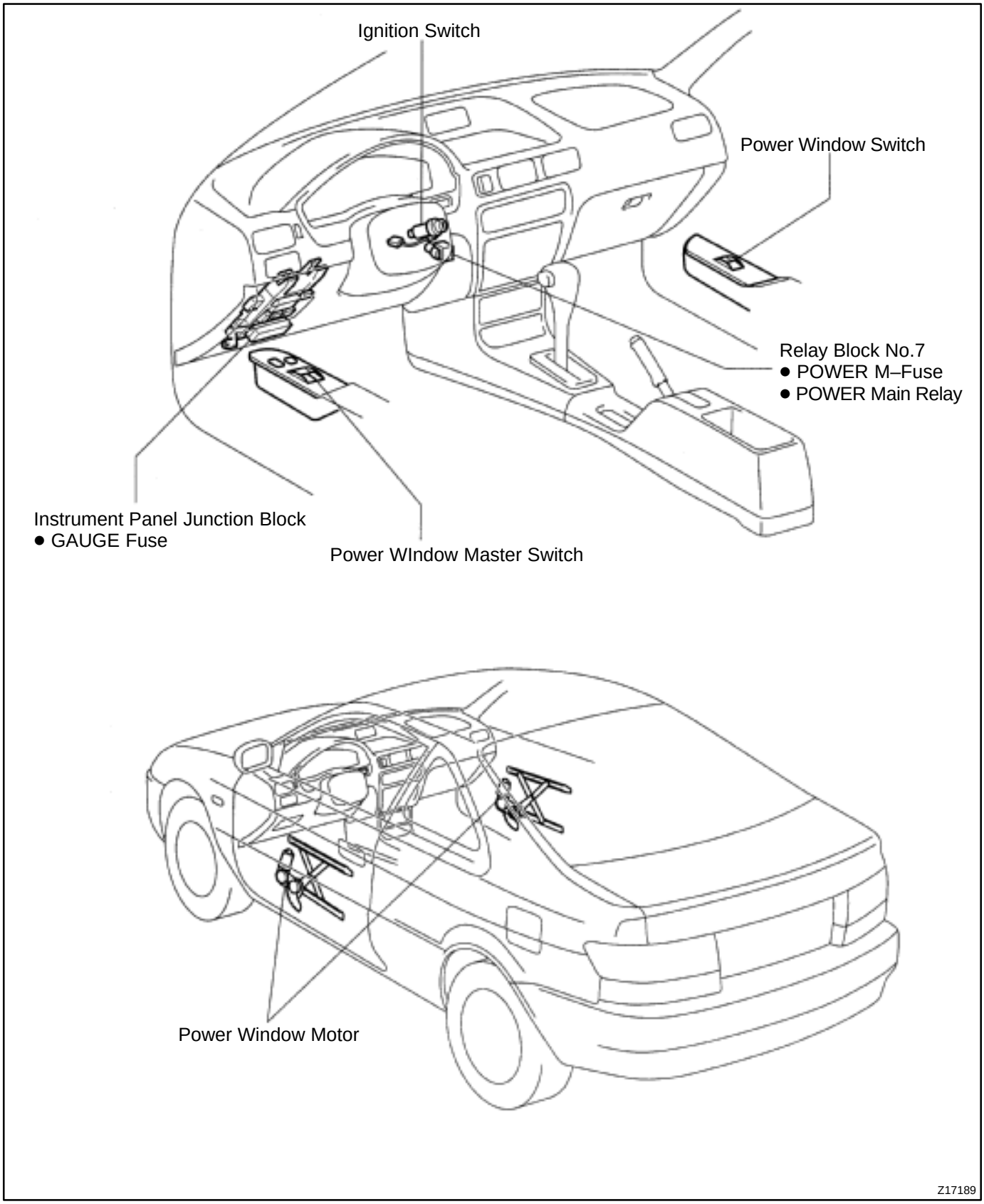

BE0Q9–01

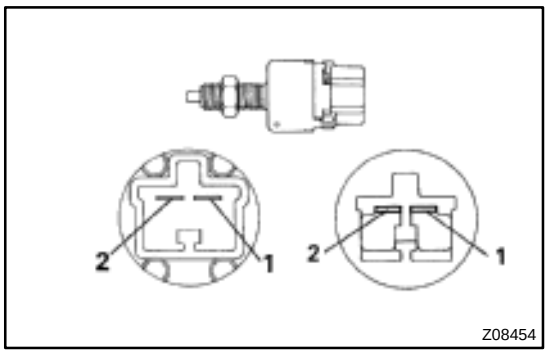

INSPECTION

INSPECT STOP LIGHT SWITCH CONTINUITY

Condition	Tester connection	Specified condition
Brake pedal depressed (Switch pin free)	1 – 2	Continuity
Brake pedal released (Switch pin pushed in)	–	No continuity

If continuity is not as specified, replace the switch.

STOP LIGHT SYSTEM

LOCATION

BE0Q8–01

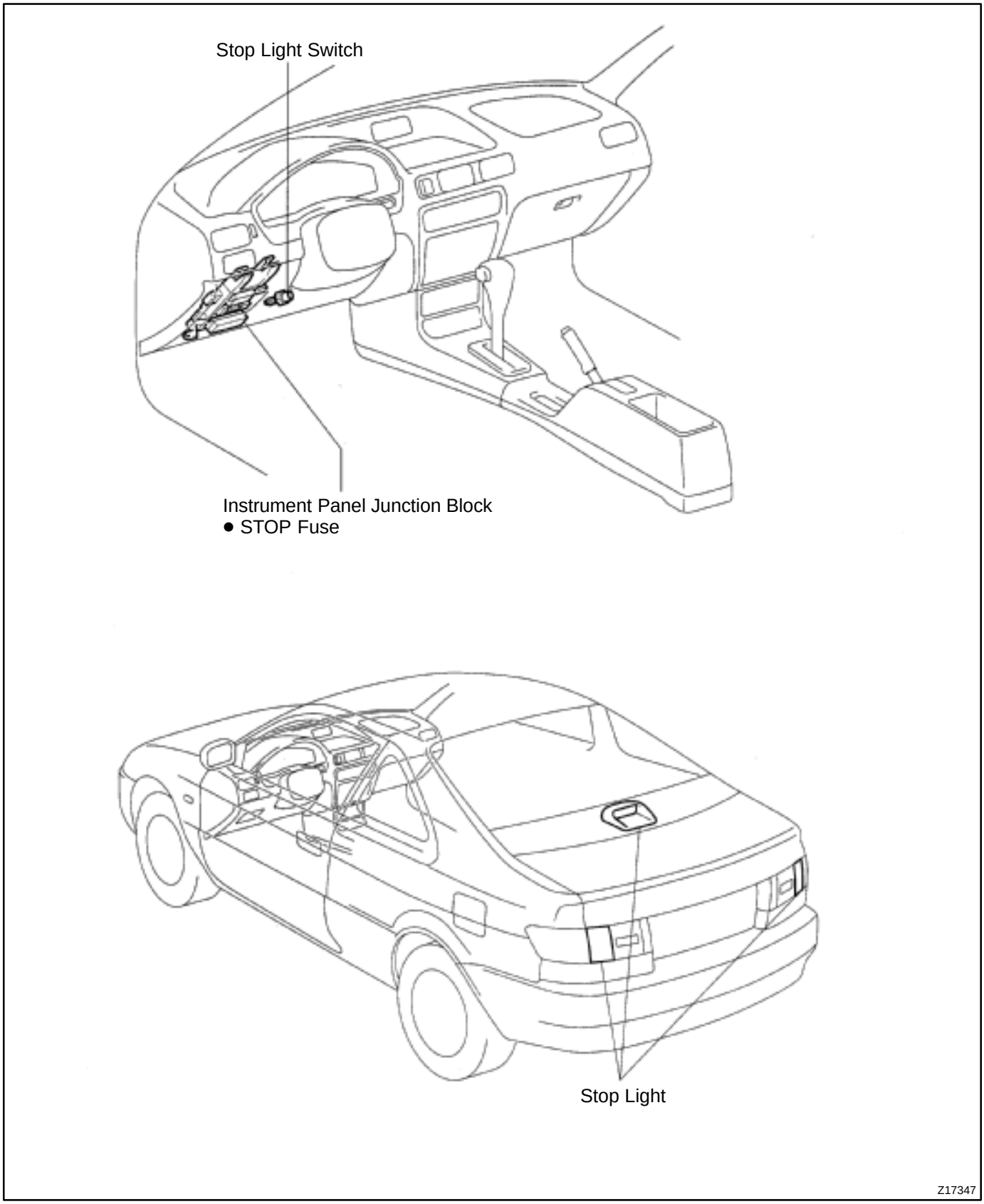

BE0Q3–02

INSPECTION

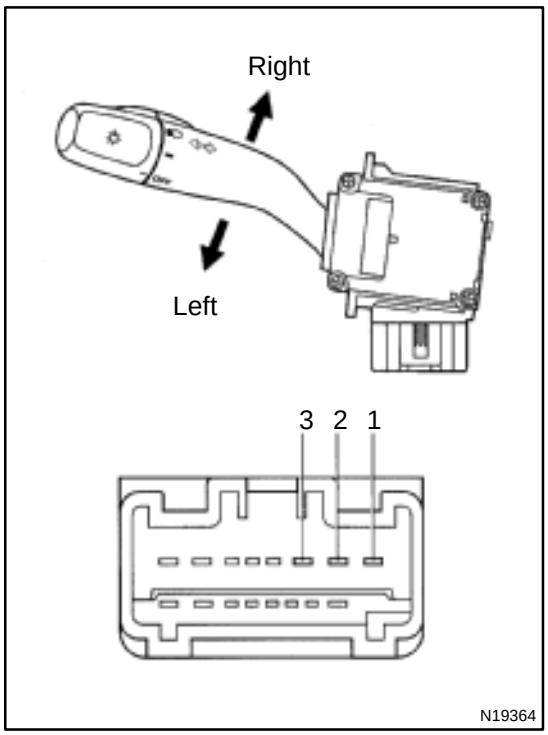

1. INSPECT TURN SIGNAL SWITCH CONTINUITY

Switch position	Tester connection	Specified condition
Left turn	1 – 2	Continuity
Neutral	–	No continuity
Right turn	2 – 3	Continuity

If continuity is not as specified, replace the switch.

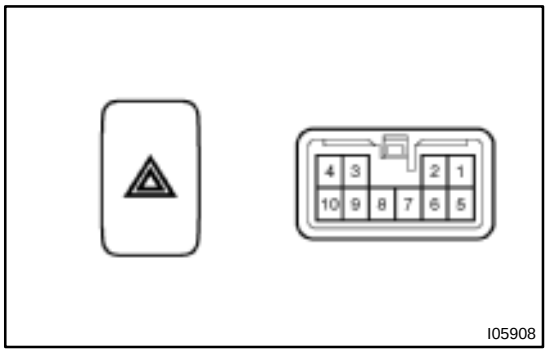

2. INSPECT HAZARD WARNING SWITCH CONTINUITY

Switch position	Tester connection	Specified condition
OFF	7 – 10	Continuity
ON	4 – 5 – 6 – 9 7 – 8	Continuity
Illumination	2 – 3	Continuity

If continuity is not as specified, replace the switch.

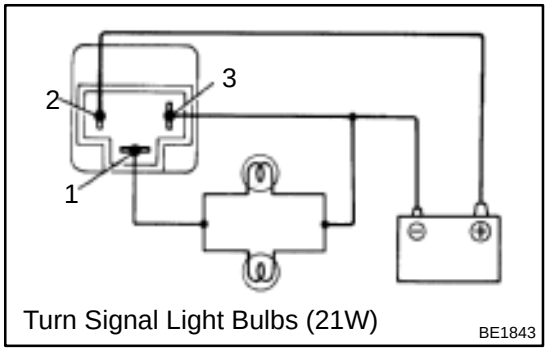

3. INSPECT TURN SIGNAL FLASHER OPERATION

(a) Connect the positive (+) lead from the battery to terminal 2 and the negative (–) lead to terminal 3.

(b) Connect the two turn signal light bulbs parallel to each other to terminal 1 and 3, and check that the bulbs flash.

HINT:

The turn signal lights should flash 60 to 120 times par minute. If one of the front or rear turn signal lights has an open circuit, the numbers of flashed will be more than 140 par minute.

If operation is not as specified, replace the flasher.

TURN SIGNAL AND HAZARD WARNING SYSTEM

BE0Q2–01

LOCATION

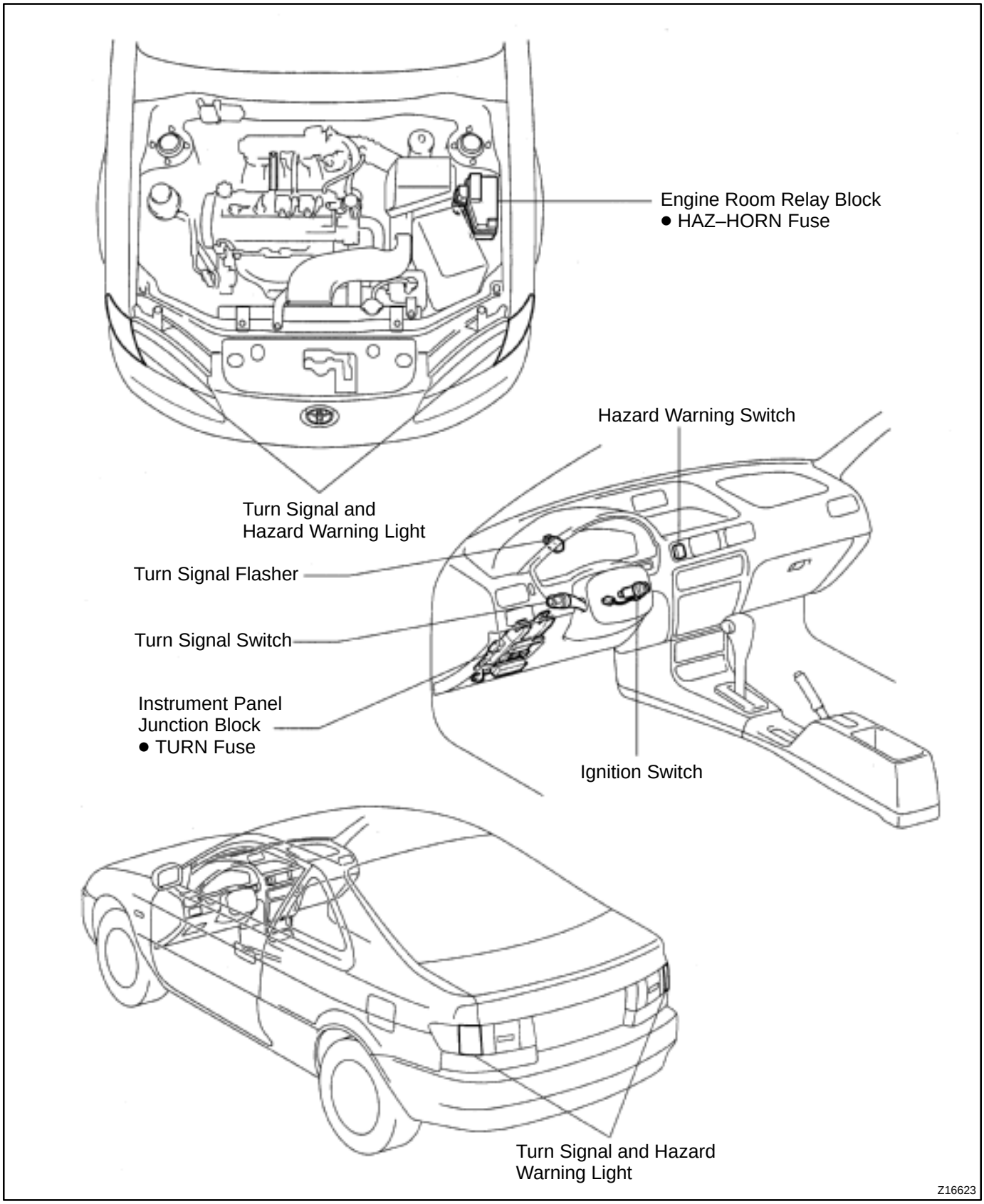

BE0QB–02

INSPECTION

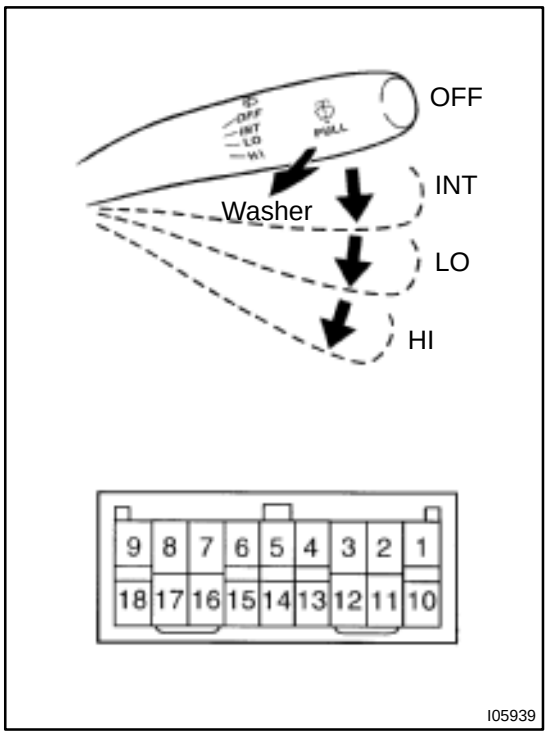

1. INSPECT WIPER AND WASHER SWITCH CONTINUITY

Switch position	Tester connection	Specified condition
Wiper OFF	7 – 16	Continuity
Wiper INT	7 – 16	Continuity
Wiper LO	7 – 17	Continuity
Wiper HI	8 – 17	Continuity
Washer ON	2 – 11	Continuity

If continuity is not as specified, replace the switch.

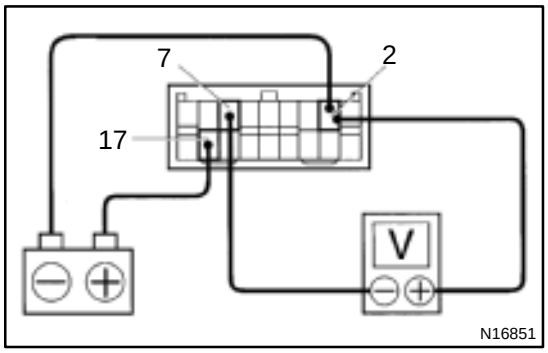

2. INSPECT INTERMITTENT OPERATION

(a) Turn the wiper switch to INT position.

(b) Connect the positive (+) lead from the battery to terminal 17 and the negative (–) lead to terminal 2.

(c) Connect the positive (+) lead from the voltmeter to terminal 16 and the negative (–) lead to terminal 7, and check that the meter needle indicates battery positive voltage.

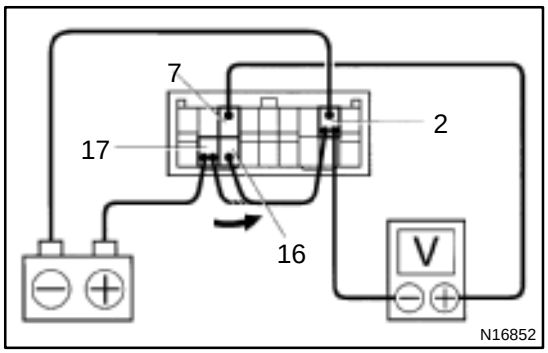

(d) After connecting terminal 16 to terminal 17, connect 16 to terminal 2.
Then, check that the voltage rises from O V to battery positive voltage within time as follows.

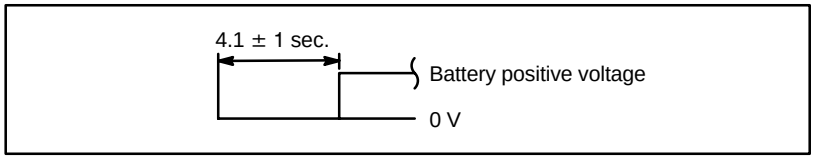

If operation is not as specified, replace the switch.

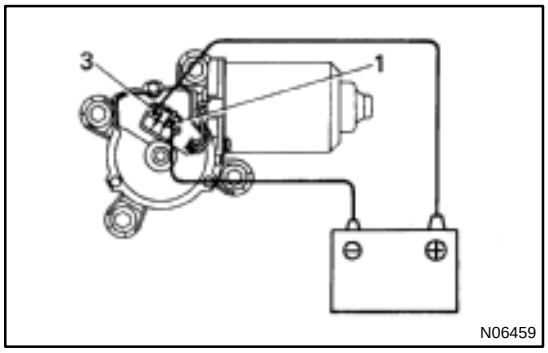

3. Low Speed:
INSPECT WIPER MOTOR OPERATION

Connect the positive (+) lead from the battery to terminal 3 and the negative (–) lead from the battery to terminal 1, and check that the motor operates at low speed.
If operation is not as specified, replace the motor.

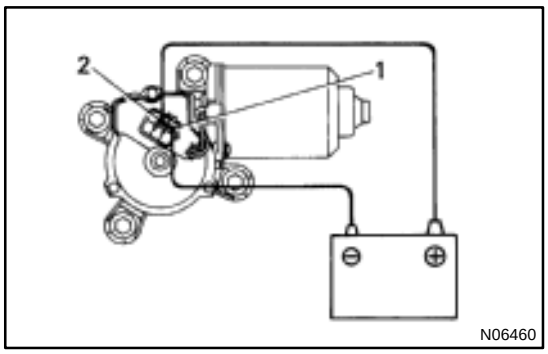

4. High Speed:
INSPECT WIPER MOTOR OPERATION

Connect the positive (+) lead from the battery to terminal 2 and the negative (–) lead from the battery to terminal 1, and check that the motor operates at high speed.

If operation is not as specified, replace the motor.

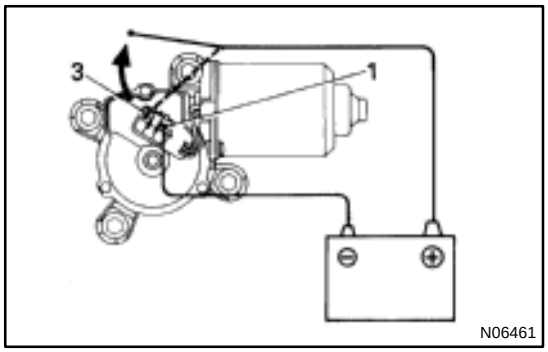

5. Stopping at Stop Position:
INSPECT WIPER MOTOR OPERATION

(a) Operate the motor at low speed and stop the motor operation anywhere except at the stop position by disconnecting positive (+) lead from terminal 3.

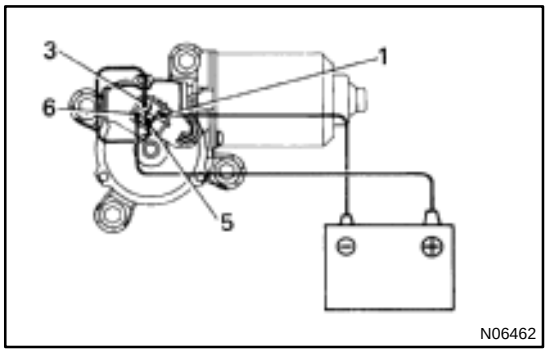

(b) Connect terminals 3 and 5.

(c) Connect the positive (+) lead from the battery to terminal 6 and the negative (–) lead from the battery to terminal 1, and check that the motor stops running at the stop position after the motor operates again.

If operation is not as specified, replace the motor.

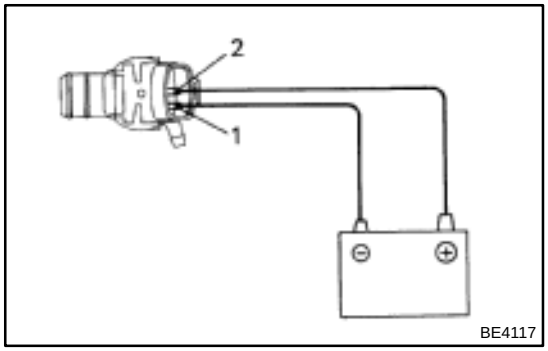

6. INSPECT WASHER MOTOR OPERATION

Connect the positive (+) lead from the battery to terminal 2 and the negative (–) lead to terminal 1, and check that the motor operates.

NOTICE:

These tests must be performed quickly (within 20 seconds) to prevent the coil from burning out.

If operation is not as specified, replace the motor.

WIPER AND WASHER SYSTEM

BE0QA–01

LOCATION

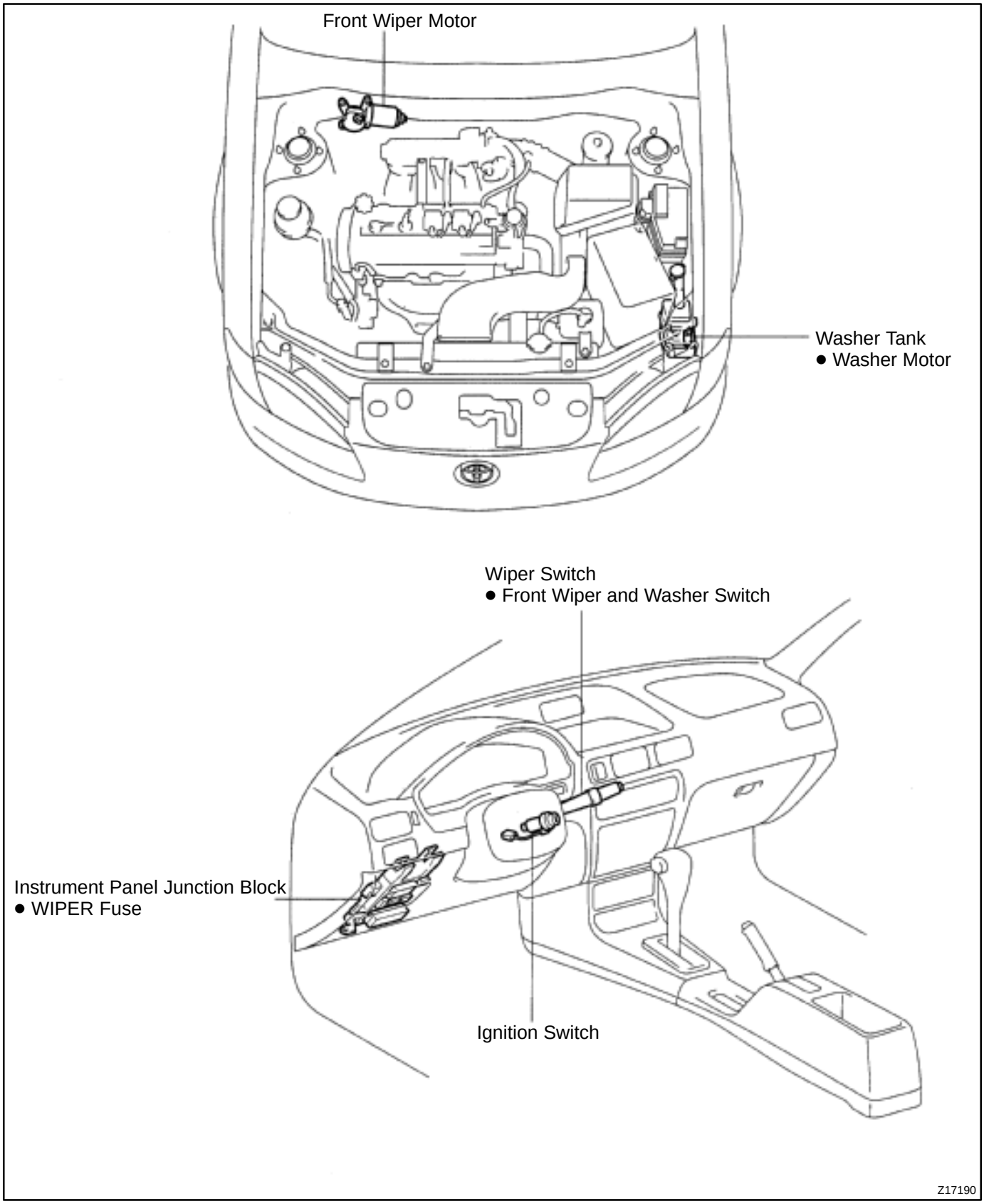

BACK WINDOW GLASS

COMPONENTS

BO1GB–01

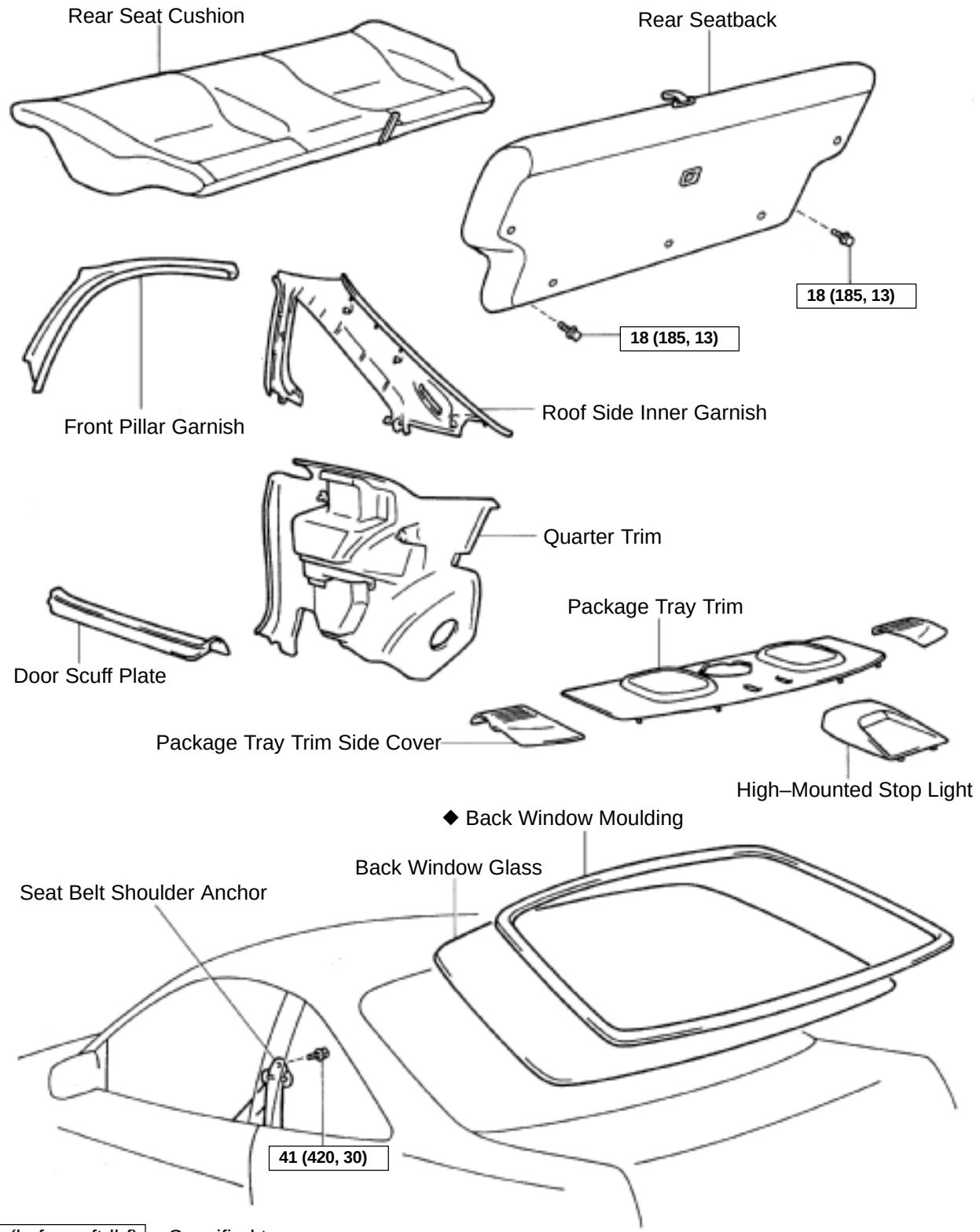

N·m (kgf·cm, ft·lbf) : Specified torque

◆ Non–reusable part

N16552

BO1GD–01

INSTALLATION

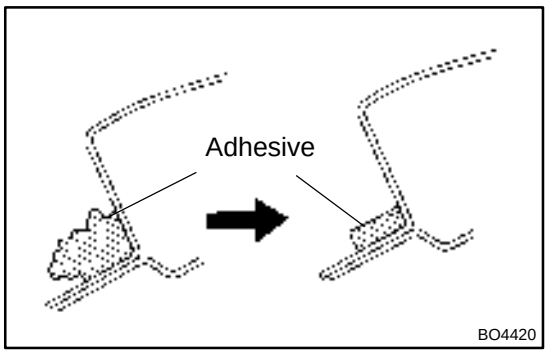

1. CLEAN AND SHAPE CONTACT SURFACE OF BODY

(a) Using a knife, cut away any rough areas on the body.

HINT:

Leave as much of the adhesive on the body as possible.

(b) Clean the cutting surface of the adhesive with a piece of shop rag saturated in cleaner.

HINT:

Even if all the adhesive has been removed, clean the body.

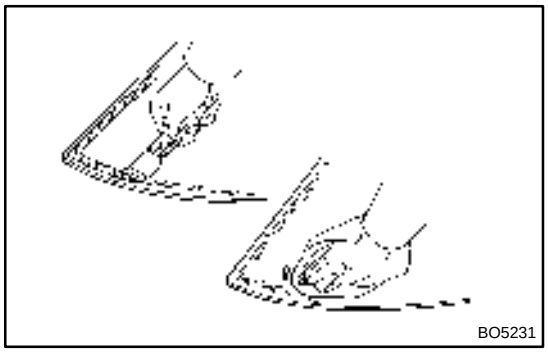

2. CLEAN REMOVED GLASS

(a) Using a scraper, remove the adhesive sticking to the glass.

(b) Clean the glass with cleaner.

NOTICE:

Do not touch the glass after cleaning it.

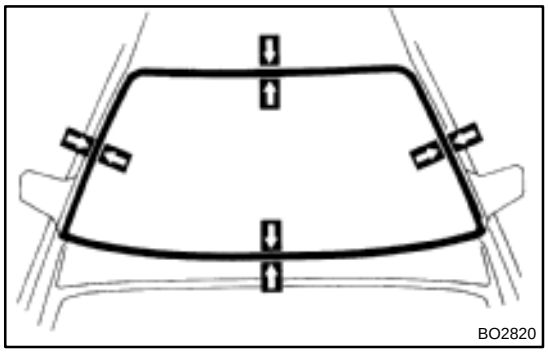

3. POSITION GLASS

(a) Place the glass in the correct position.

(b) Check that all contacting parts of the glass rim are perfectly even and do not make contact with the spacers.

(c) Place reference marks between the glass and body.

(d) Remove the glass.

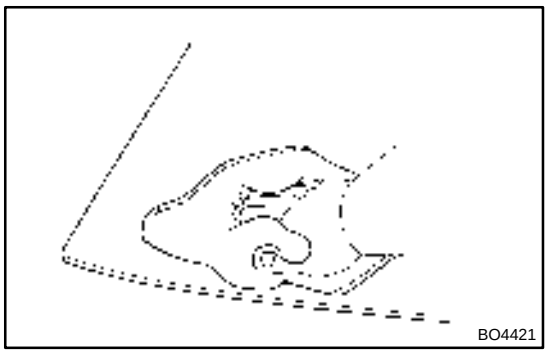

4. CLEAN CONTACT SURFACE OF GLASS

Using a cleaner, clean the contact surface which is black–colored area around the entire glass rim.

NOTICE:

Do not touch the glass face after cleaning it.

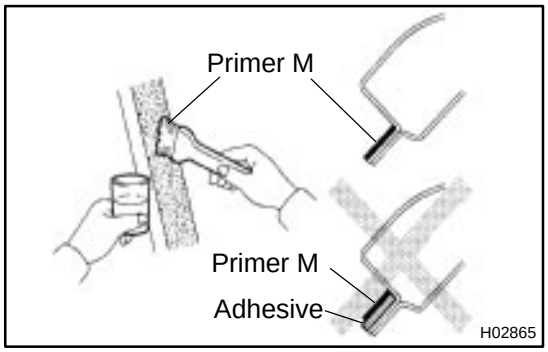

5. COAT CONTACT SURFACE OF BODY WITH PRIMER "M"

Using a brush, coat the contact surface of the body with Primer M.

NOTICE:

- **Let the primer coating dry for 3 minutes or more.**
- **Do not coat Primer M to the adhesive.**
- **Do not keep any of the opened Primer M for later use.**

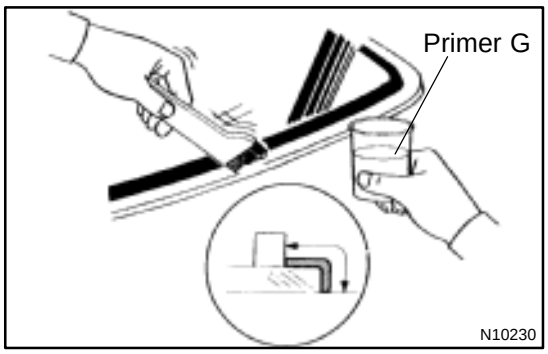

6. COAT CONTACT SURFACE OF GLASS WITH PRIMER "G"

(a) Using a brush or sponge, coat the edge of the glass and the contact surface with Primer G.

(b) When the primer is coated wrongly to the area other than the specified, wipe it off with a clean shop rag before the primer dries.

NOTICE:

- **Let the primer coating dry for 3 minutes or more.**
- **Do not keep any of the opened Primer G for later use.**

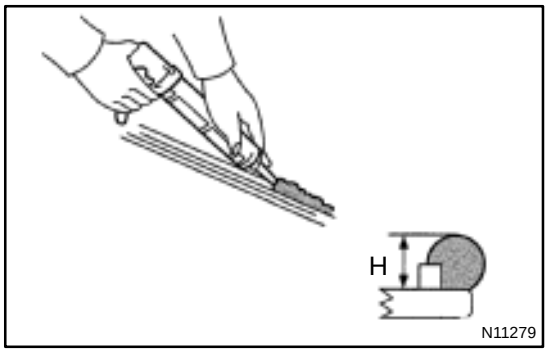

7. APPLY ADHESIVE

(a) Cut off the tip of the cartridge nozzle.
Part No. 08850–00801 or equivalent

HINT:
After cutting off the tip, use all adhesive within the time described in the table below.

Temperature	Tackfree time
35˚C(95˚F)	15 minutes
20˚C(68˚F)	100 minutes
5˚C(41˚F)	8 hours

(b) Load the cartridge into the sealer gun.

(c) Coat the glass with adhesive as shown.
Adhesive height:
If adhesive remains on body
3.5 – 5.0 mm (0.138 – 0.197 in.)
If no adhesive remains on body
8 – 10 mm (0.31 – 0.39 in.)

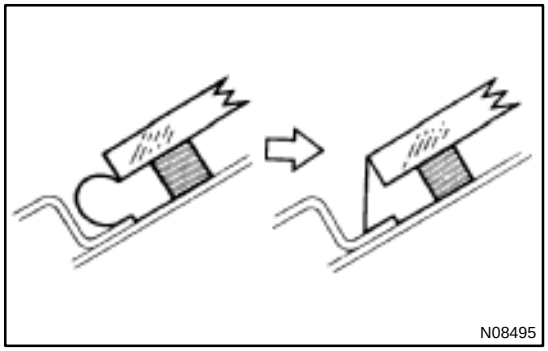

8. INSTALL GLASS

HINT:
Confirm that the dam is attached to the body panel, as shown in the illustration.

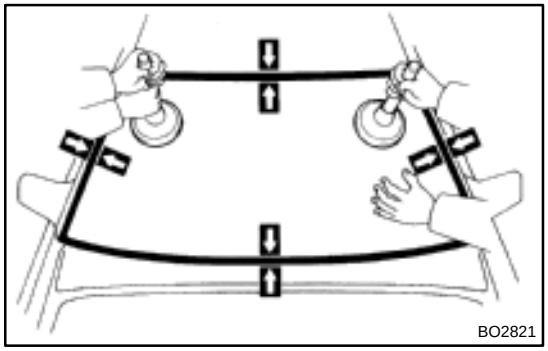

(a) Position the glass so that the reference marks are lined up, and press in gently along the rim.

(b) Using a spatula, apply adhesive on the glass rim.

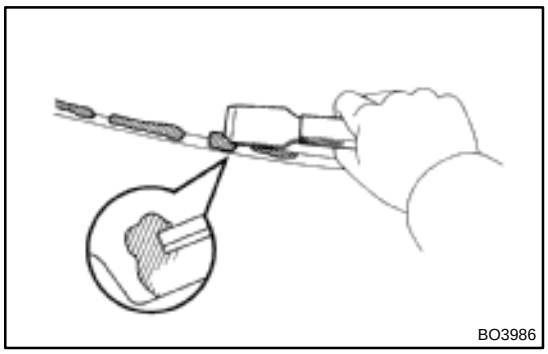
BO3986

(c) Use a scraper to remove any excessive or protruding adhesive.
(d) Hold the back window glass in place securely with a protective tape or equivalent until the adhesive hardenes.

NOTICE:
Take care not to drive the vehicle during the time described in the table below.

Temperature	Minimum time prior to driving the vehicle
35˚C(95˚F)	1.5 hours
20˚C(68˚F)	5 hours
5˚C(41˚F)	24 hours

9. INSPECT FOR LEAK AND REPAIR
(a) Conduct a leak test after the hardening time has elapsed.
(b) Seal any leak with sealant.
Part No. 08833–00030 or equivalent.

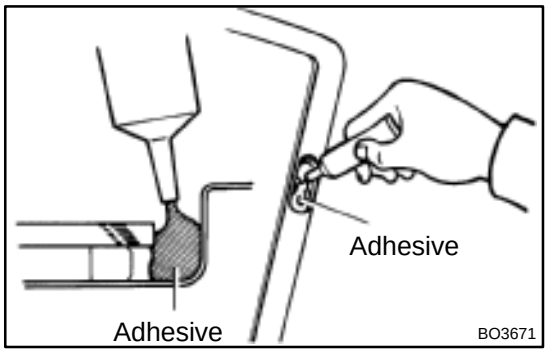

BO3671

10. APPLY ADHESIVE TO MOULDING INSTALLATION AREA
Apply adhesive to the moulding installation area between the glass and the body.
Part No. 08833–00030 or equivalent.

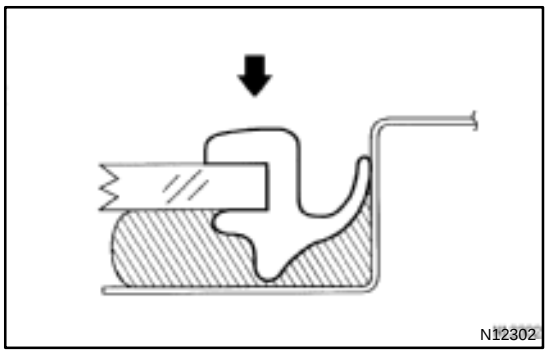
N12302

11. INSTALL BACK WINDOW OUTSIDE UPPER MOULDING
Place the moulding onto the body and tap it by hand.
12. INSTALL THESE PARTS:
(a) Package tray trim
(b) Package tray trim side covers
(c) High–mounted stop light
(d) Roof side inner garnish
(e) Front seat belt
(f) Quarter trim
(g) Door scuff plate
(h) Rear seat belt
Torque: 41 N·m (420 kgf·cm, 30 ft·lbf)
(i) Rear seat cushion and seatback
Torque: 18 N·m (185 kgf·cm, 13 ft·lbf)
13. CONNECT DEFOGGER CONNECTOR

BO1GC–02

REMOVAL

1. DISCONNECT DEFOGGER CONNECTOR

2. REMOVE THESE PARTS:

(a) Rear seat cushion and seatback
(b) Rear seat belt
(c) Door scuff plate
(d) Quarter trim
(e) Front seat belt
(f) Roof side inner garnish
(g) High–mounted stop light
(h) Package tray trim side covers
(i) Package tray trim

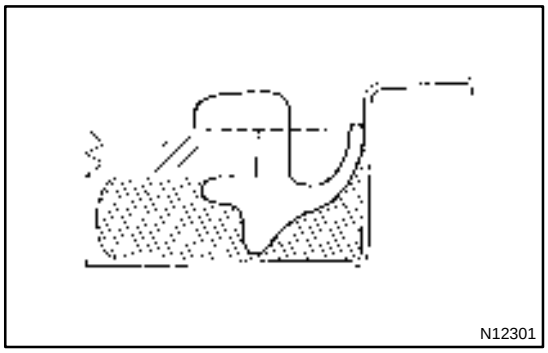
N12301

3. REMOVE BACK WINDOW MOULDING

Using a knife, cut off the body.

NOTICE:

Do not damage the body with the knife.

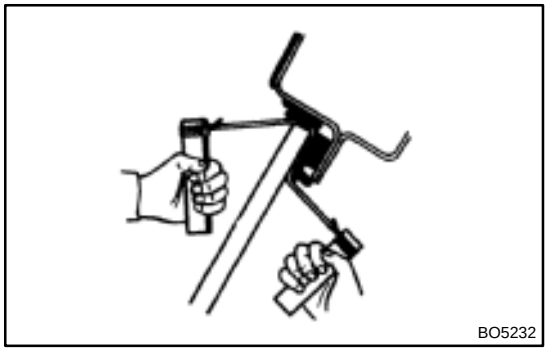
BO5232

4. REMOVE WINDSHIELD GLASS

(a) Disconnect the connector.
(b) Push piano wire through between the body and glass from the interior.
(c) Tie both wire ends to a wooden block or similar object.

HINT:

Apply adhesive tape to the outer surface to keep the surface from being scratched.

NOTICE:

When separating, take care not to damage the paint and interior and exterior ornaments.

(d) Cut the adhesive by pulling the piano wire around it.
(e) Remove the glass.

NOTICE:

Leave as much of the adhesive on the body as possible when cutting off the glass.

CLIP

BO0VU–04

REPLACEMENT

The removal and installation methods of typical clips used in body parts are shown in the table below.
HINT:
If the clip is damaged during the operation, always replace it with a new clip.

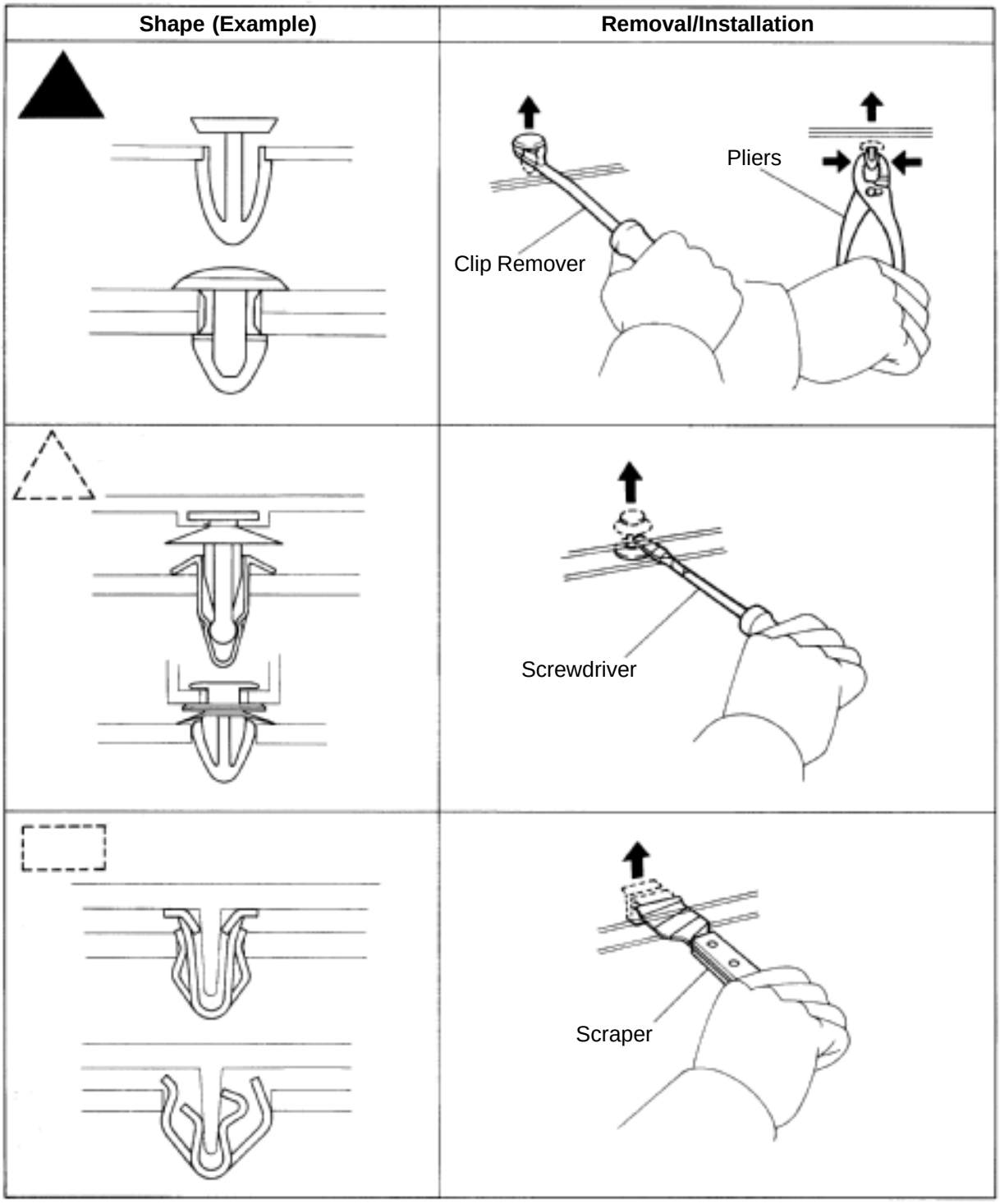

V00005

Shape (Example)	Removal/Installation
	Removal Installation 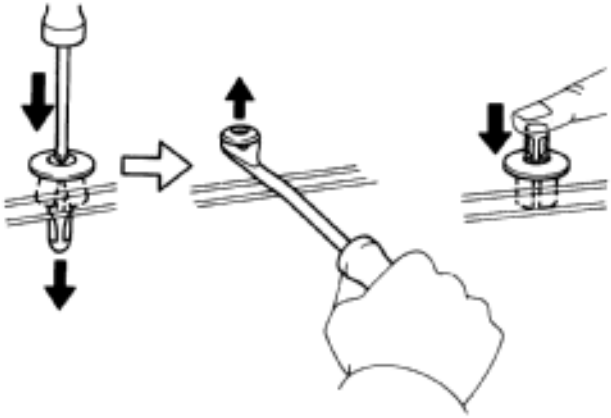
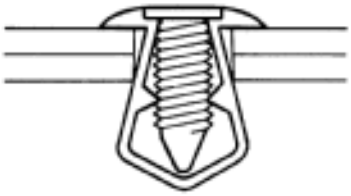	Removal Installation 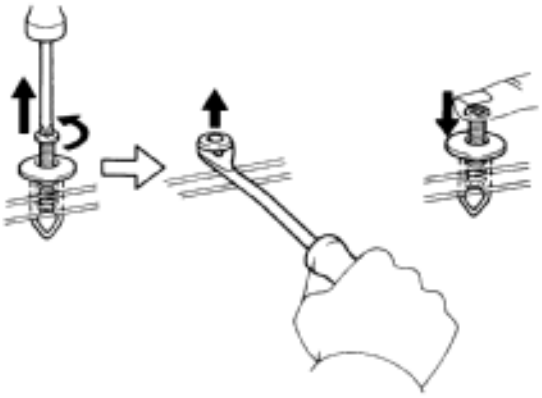

V00012

FRONT BUMPER

COMPONENTS

BO1FK–01

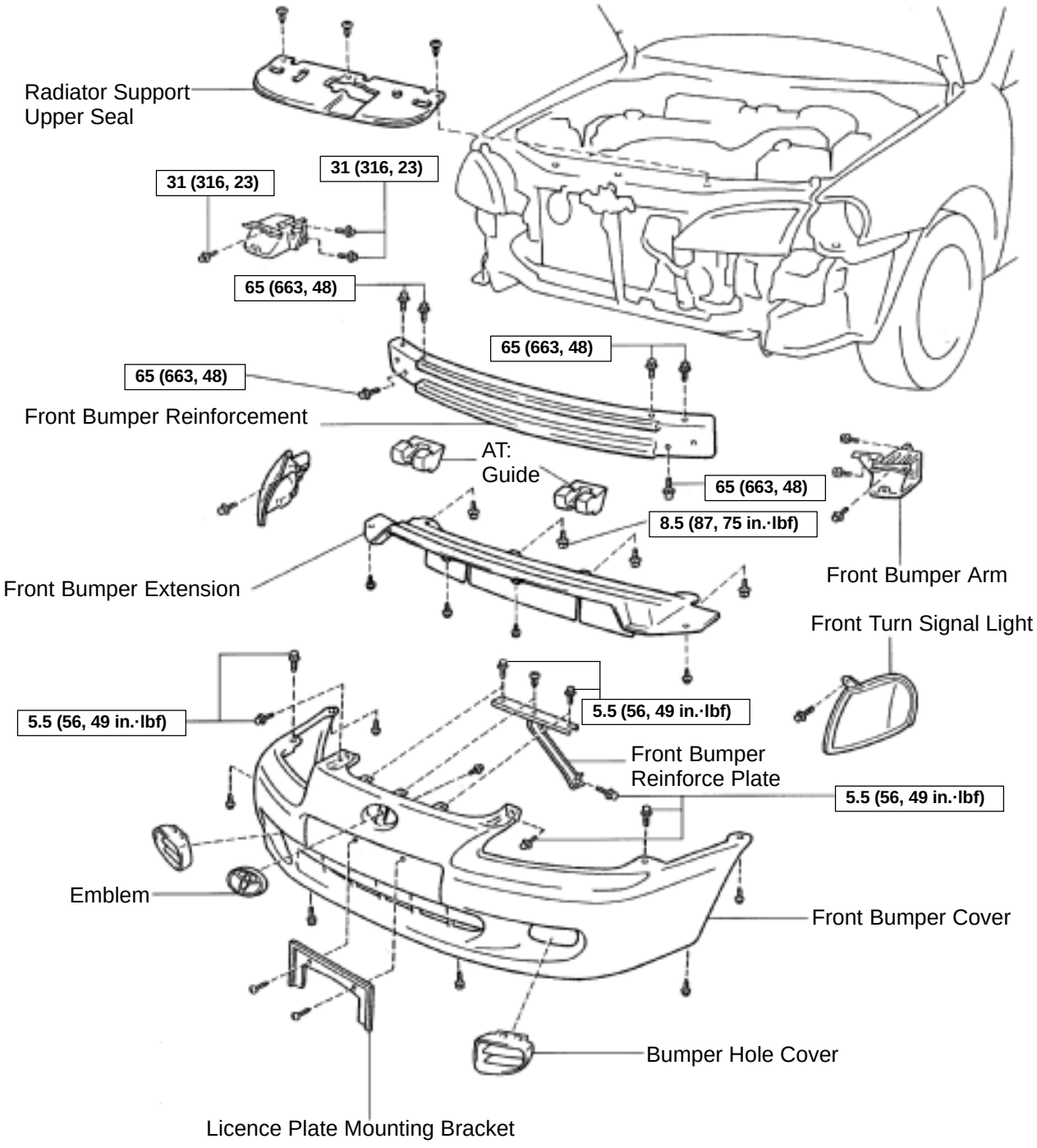

N·m (kgf·cm, ft·lbf) : Specified torque

N16744

BO1FP–02

ADJUSTMENT

1. ADJUST DOOR IN FORWARD/REARWARD AND VERTICAL DIRECTIONS

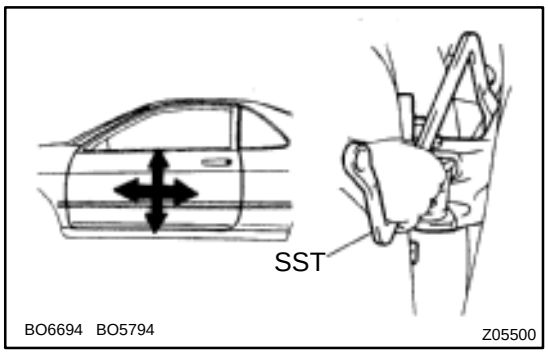

Using SST, adjust the door by loosening the body side hinge bolts.

SST 09812–00010

Torque: 25 N·m (260 kgf·cm, 19 ft·lbf)

2. ADJUST DOOR IN LEFT/RIGHT AND VERTICAL DIRECTIONS

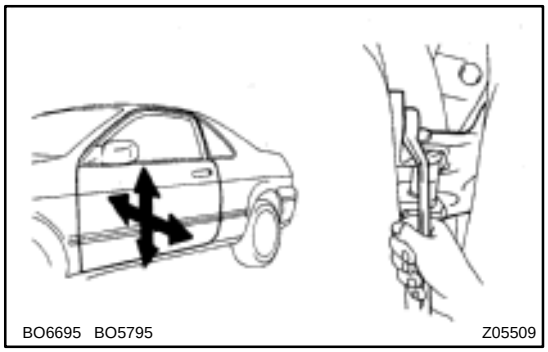

Loosen the door side hinge bolts to adjust.

HINT:

Substitute the bolt with washer for the centering bolt.

(See page BO–6)

Torque: 25 N·m (260 kgf·cm, 19 ft·lbf)

3. ADJUST DOOR LOCK STRIKER

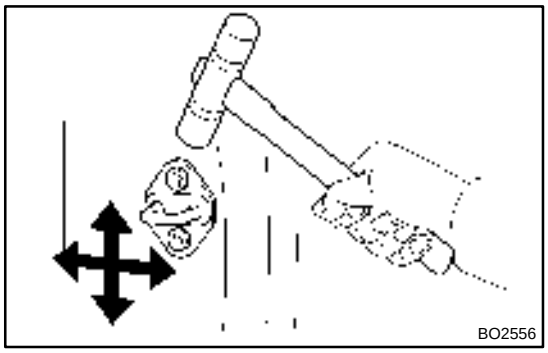

(a) Check that the door fit and door lock linkages are adjusted correctly.

(b) Loosen the striker mounting screws to adjust the striker.

(c) Using a plastic hammer, tap the striker to adjust it.

FRONT DOOR

COMPONENTS

BO1FN–02

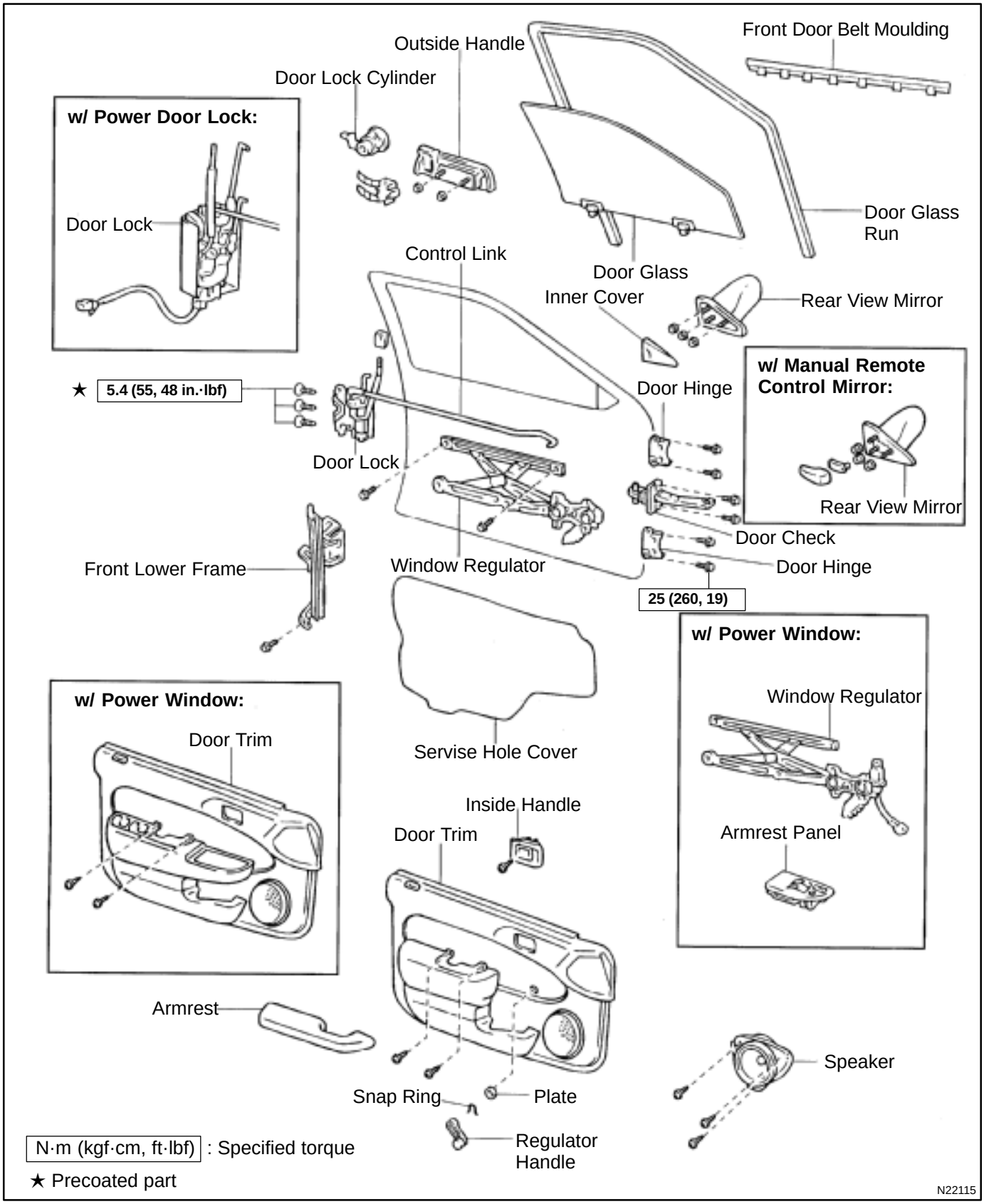

BO1FO–02

DISASSEMBLY

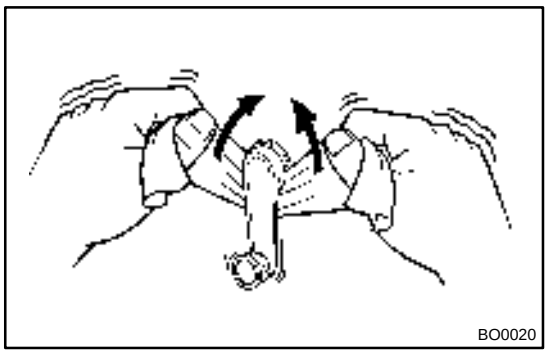

1. w/o Power Window:

REMOVE REGULATOR HANDLE

Pull off the snap ring with a shop rag and remove the regulator handle and plate.

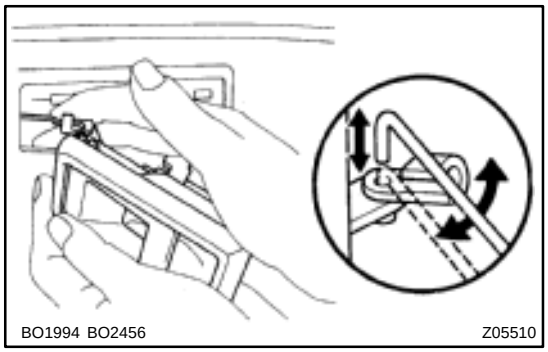

2. REMOVE DOOR INSIDE HANDLE

(a) Remove the screw and slide the handle forward.

(b) Disconnect the handle from the 2 control links and remove the handle.

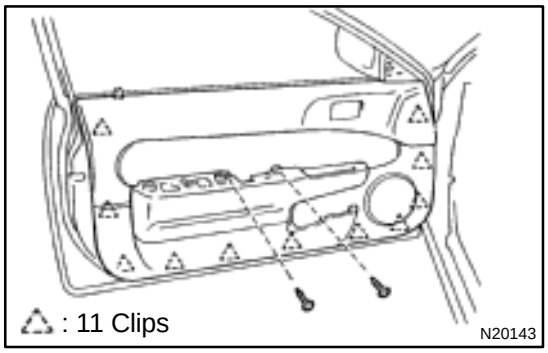

3. REMOVE DOOR TRIM

(a) Remove the armrest.

(b) Remove the 2 screws.

(c) Insert a screwdriver between the door and the door trim to pry out.

NOTICE:

Be careful not to damage the door and door trim.

HINT:

Tape the screwdriver tip before use.

(d) Pull the trim upwards to remove it.

4. REMOVE REAR VIEW MIRROR

(a) w/ Manual Remote Control Mirror:

With the front side window fully open, remove the knob cover with a screwdriver as shown in the illustration.

(b) w/ Manual Remote Control Mirror:

Remove the screw and knob.

(c) Using a screwdriver, pry off the Inner cover.

HINT:

Tape the screwdriver tip before use.

(d) Remove the 3 nuts and mirror.

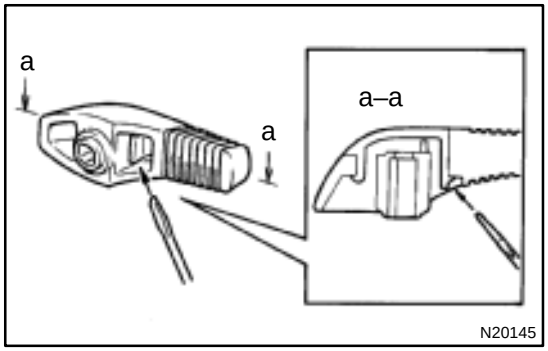

5. REMOVE DOOR BELT MOULDING

Pry out the clips from the edge of the moulding and remove the moulding.

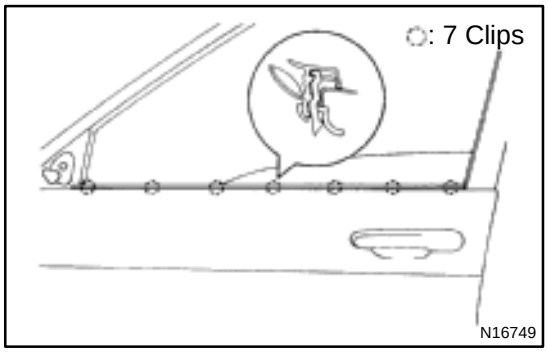

6. REMOVE SPEAKER

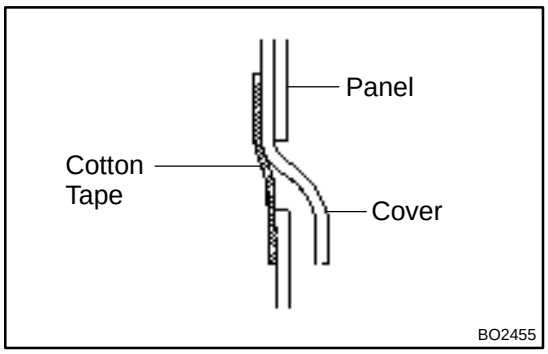

7. REMOVE SERVICE HOLE COVER

HINT:

At the time of reassembly, please refer to the following item.

Bring out the link through the service hole cover.

8. REMOVE THESE PARTS:

(a) Door glass run

(b) Door glass

(c) Rear lower frame

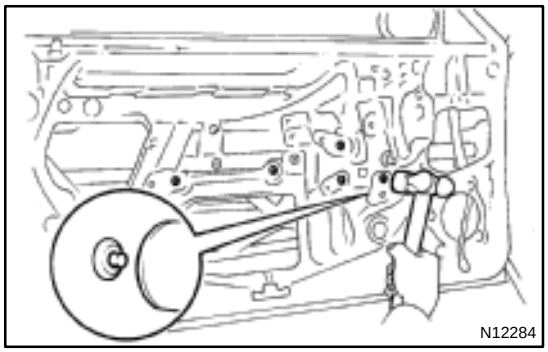

9. REMOVE WINDOW REGULATOR

(a) Using a hammer, tap out the mandrels from the inside to the outside of the vehicle.

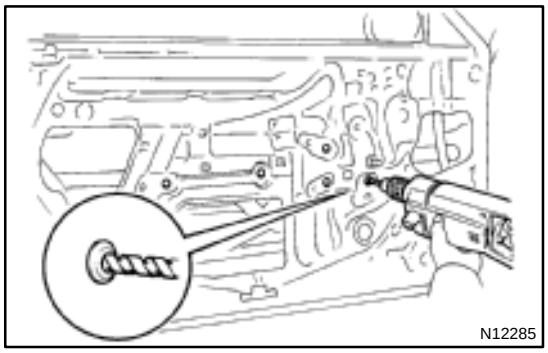

(b) Using a drill of less than 6.8 mm (0.268 in.), drill out the rivet heads and remove the window regulator.

HINT:

Do not drill the door inner hole.

(c) Remove the regulator through the service hole.

(d) Using a vacuum cleaner, remove the drilled rivets and their dust from the inside of the door.

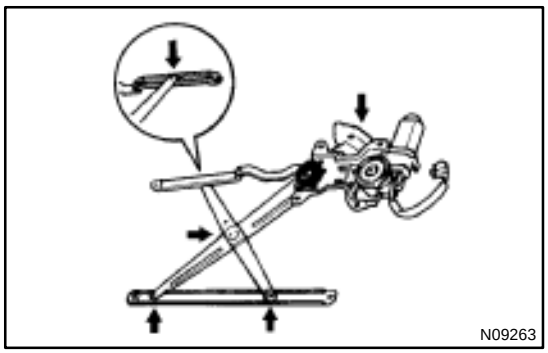

HINT:

At the time of reassembly, please refer to the following item.

Apply MP grease to the sliding surface and gears of the window regulator.

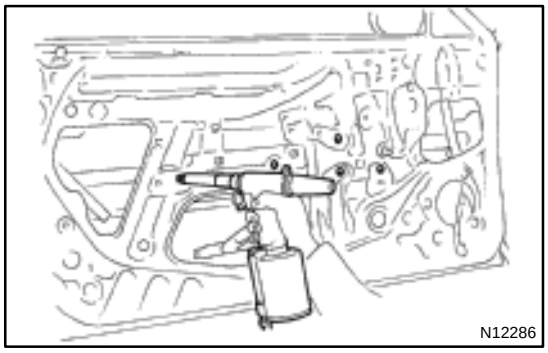

HINT:

At the time of reassembly, please refer to the following item.

Using an air riveter, strike rivets into the door frame to install the window regulator to the door frame.

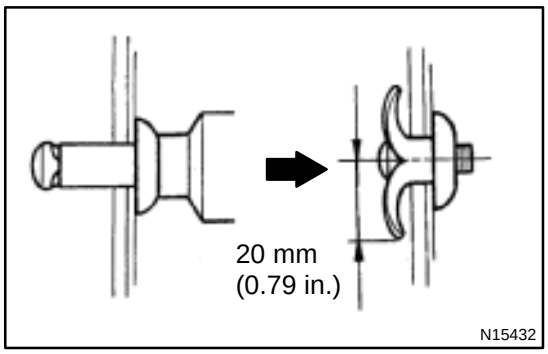

CAUTION:
At the time of reassembly, please refer to the following item.
To avoid personal injury and short of the wiring when installing ø 6.4 mm (0.252 in.) rivets, keep your hands and wire harness out of the 20 mm (0.79 in.) radius that the caulked ø 6.4 mm (0.252 in.) rivet will cover.

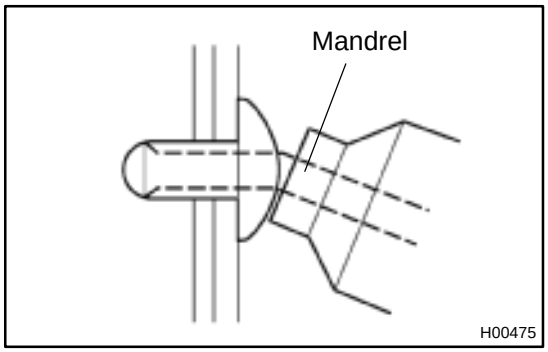

NOTICE:
At the time of reassembly, please refer to the following item.
If the rivet is not positioned perpendicularly, it will bend the mandrel.
If the trigger is pulled then, it may damage SST.

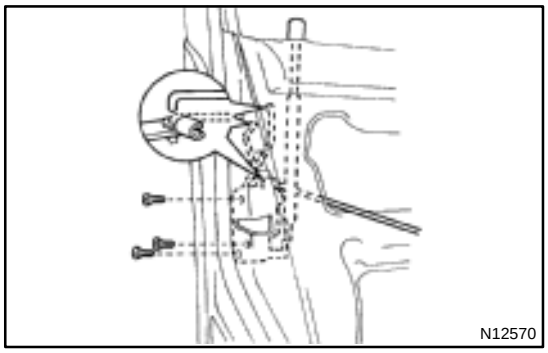

10. REMOVE DOOR LOCK

(a) Remove the door lock control knob from the link.
(b) Disconnect the 2 links from the outside handle and door lock cylinder.
(c) Remove the 3 screws.
Torque: 5.4 N·m (55 kgf·cm, 48 in.·lbf)

HINT:
At the time of reassembly, please refer to the following item.
Apply adhesive to the 3 screws.
Part No. 08833–00070, THREE BOND 1342 or equivalent.

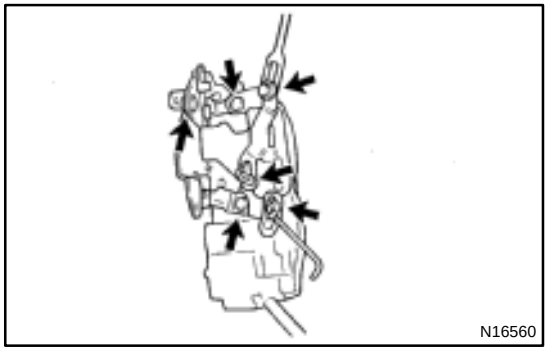

HINT:
At the time of reassembly, please refer to the following item.
Apply MP grease to the sliding and rotating parts of the door lock.

11. REMOVE THESE PARTS:

(a) Outside handle
(b) Door lock cylinder

BO1FQ–01

REASSEMBLY

Reassembly is in the reverse order of disassembly (See page BO–8).

FRONT SEAT

COMPONENTS

BO1GR–02

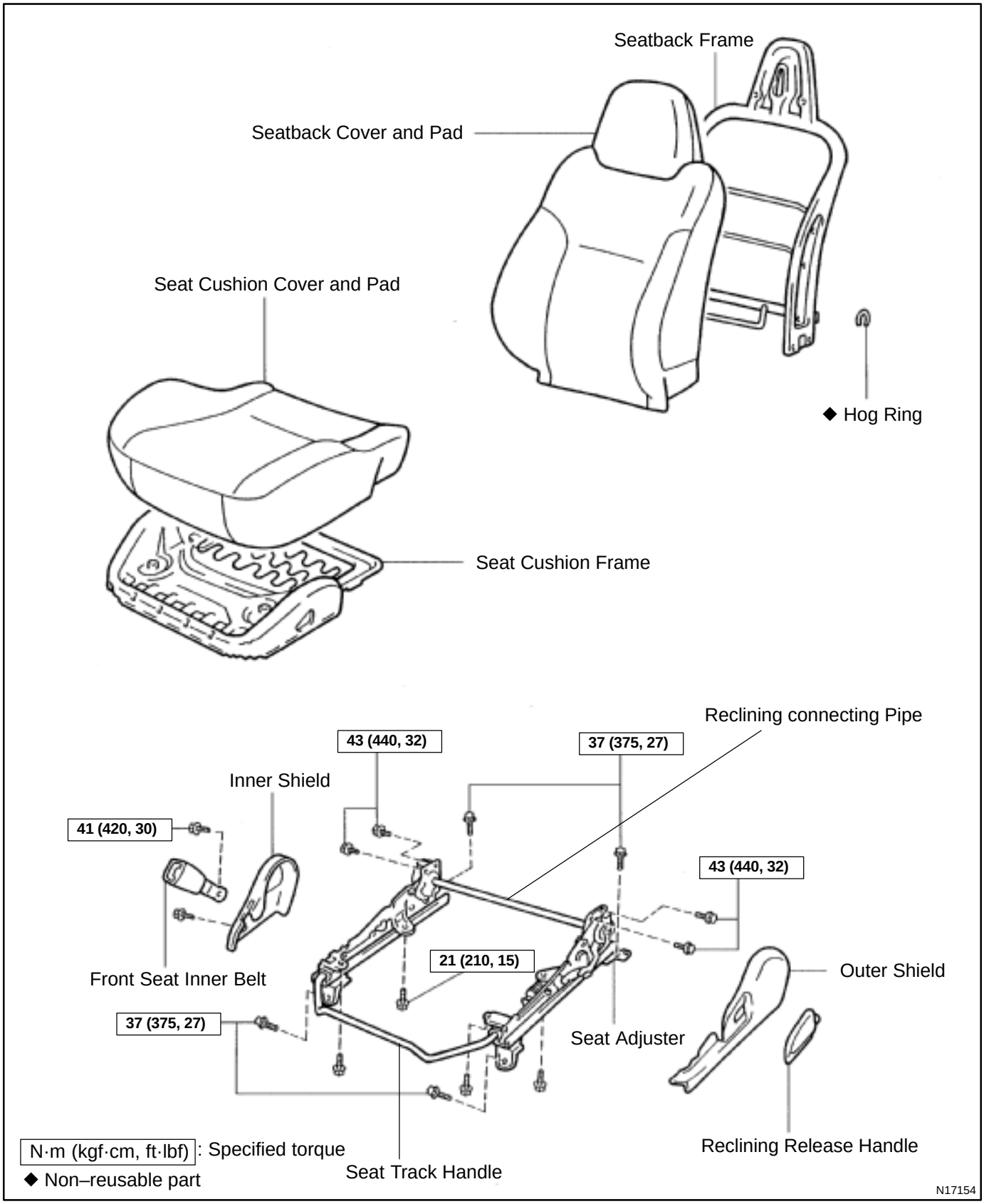

BO35U–01

DISASSEMBLY

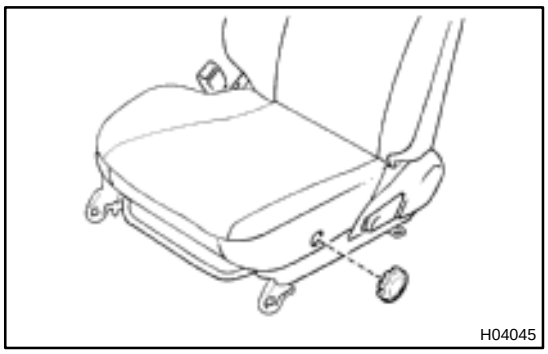

1. REMOVE THESE PARTS:

(a) w/ Vertical adjuster:
Vertical adjuster knob

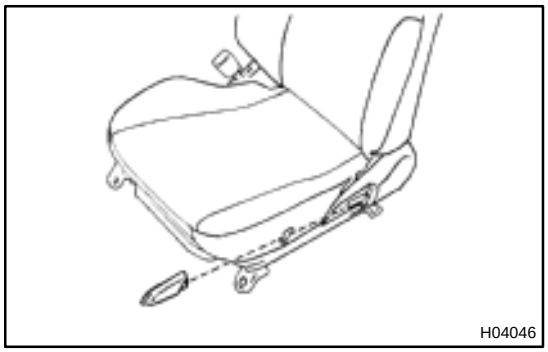

(b) Reclining adjuster release lever

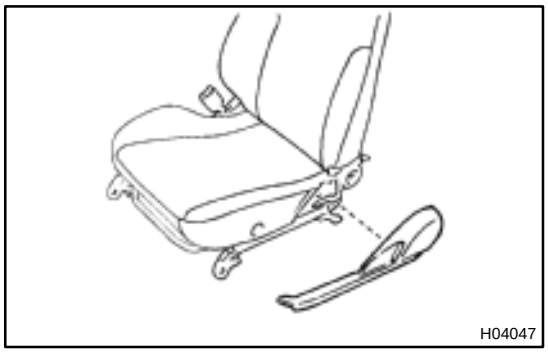

(c) Outer shield

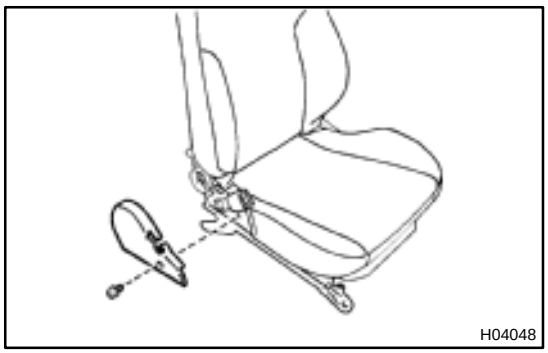

2. REMOVE INNER SHIELD

(a) Remove the screw.
(b) Remove the inner shield.

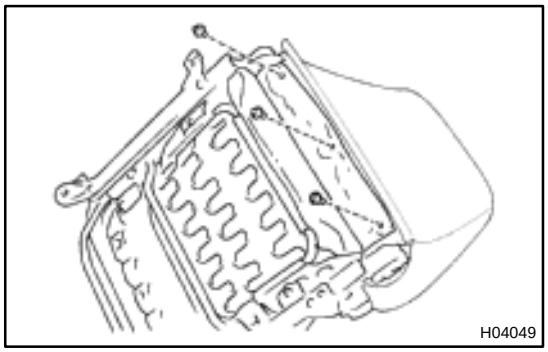

3. REMOVE SEATBACK ASSEMBLY

(a) Remove the 3 clips.
(b) Remove the hog rings.
(c) Remove the 4 bolts.
(d) Remove the seatback assembly.

4. REMOVE SEATBACK COVER

(a) Remove the seatback frame from the seatback cover with pad.
(b) Remove the seatback cover from the seatback pad.

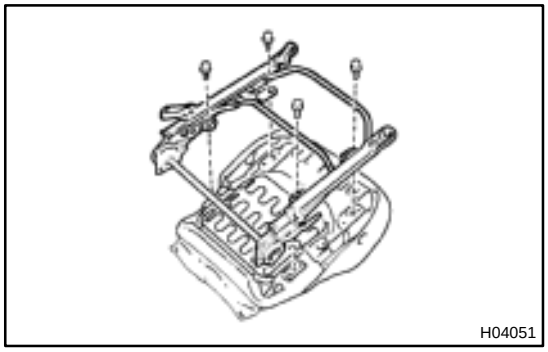
H04051

5. REMOVE SEAT CUSHION ASSEMBLY

Remove the 4 bolts and seat cushion assembly from the seat adjuster.

6. REMOVE SEAT CUSHION COVER

(a) Remove the seat cushion pad with cover from the seat cushion frame.

(b) Remove the seat cushion cover from the seat cushion pad.

7. REMOVE THESE PARTS:

(a) Seat belt

(b) Reclining connecting pipe

(c) Seat track handle

BO1GU–01

INSPECTION

INSPECT RECLINING LOCK POSITION AND SLIDING LOCK POSITION SLIPPING OFF

(a) When reclining the seat, inspect that the outer and inner tracks are released at the same time.

HINT:

When the reclining lock position slip off, disassemble the seat to adjust the positions.

(b) When sliding the seat, inspect that the outer and inner tracks are locked at the same time.

HINT:

When sliding lock position slip off, loosen the bolts to adjust the positions.

BO1GW–01

INSTALLATION

1. INSTALL FRONT SEAT

(a) Slide the front seat to the frontmost position.

NOTICE:

Make sure that seat adjuster locks.

(b) Without holding the seat track handle, mount the seat to the vehicle.

HINT:

If holding the seat track handle, the adjusted frontmost positions slip off.

(c) Tighten the bolts on the rear side temporarily, then tighten them completely starting from the bolt on the inner side.

Torque: 37 N·m (375 kgf·cm, 27 ft·lbf)

(d) Slide the seat to the rearmost position to install the bolts on the front side.

Torque: 37 N·m (375 kgf·cm, 27 ft·lbf)

(e) Connect the connectors.

2. INSTALL SEAT TRACK COVERS

BO35V–01

REASSEMBLY

1. INSTALL SEAT TRACK HANDLE

Install the seat track handle.

2. INSTALL RECLINING CONNECTING PIPE

(a) Adjust the reclining lock positions of the seat adjusters.

(b) Slide the seat adjusters to the most front position.

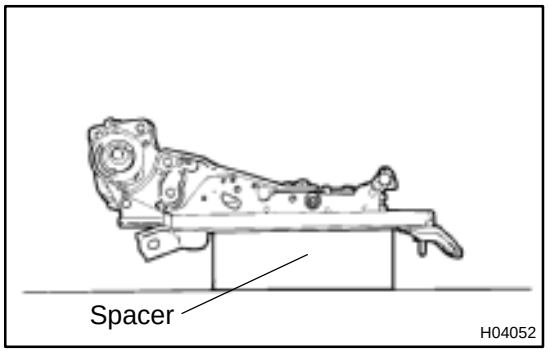

(c) Place the adjusters on a spacer to adjust the seat rails in parallel and install the connecting pipe.

HINT:

When installing the connecting pipe with raising up the adjusters, the lock positions adjusted in 2–(a) step slip off, lock error will occur.

3. INSTALL SEAT CUSHION COVER

(a) Install the seat cushion cover with new hog rings to seat cushion pad.

(b) Install the seat cushion cover with pad to the seat cushion frame with new hog rings.

HINT:

Install the hog rings to prevent wrinkles as least as possible.

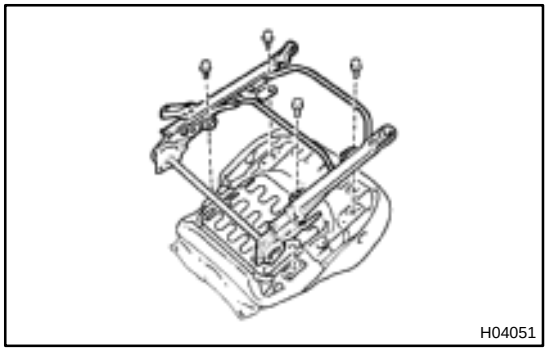

4. INSTALL SEAT CUSHION ASSEMBLY

Install the seat cushion assembly with 4 bolts to the seat adjuster.

HINT:

Tighten the 4 bolts temporarily, then from the bolts on the rear side tighten completely.

Torque: 21 N·m (210 kgf·cm, 15 ft·lbf)

5. INSTALL SEATBACK COVER

(a) Install the seatback cover with new hog rings to the seatback pad.

(b) Install the seatback cover with pad to the seatback frame.

6. INSTALL SEATBACK ASSEMBLY

(a) Install the seatback assembly with 4 bolts.

Torque: 43 N·m (440kgf·cm, 32 ft·lbf)

HINT:

Tighten the 4 bolts temporarily, then from the bolt on the front right side tighten completely.

(b) Install new hog rings.

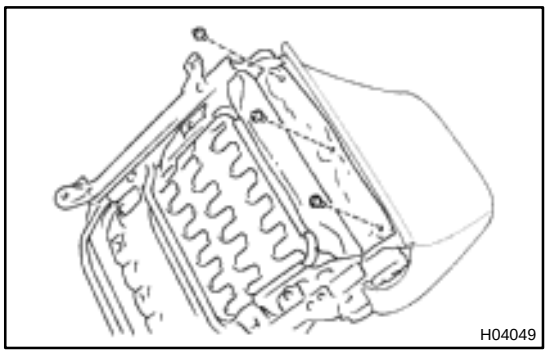

(c) Install the 3 clips.

7. INSTALL SEAT INNER BELT

Install the seat inner belt with bolt.

Torque: 41 N·m (420 kgf·cm, 30 ft·lbf)

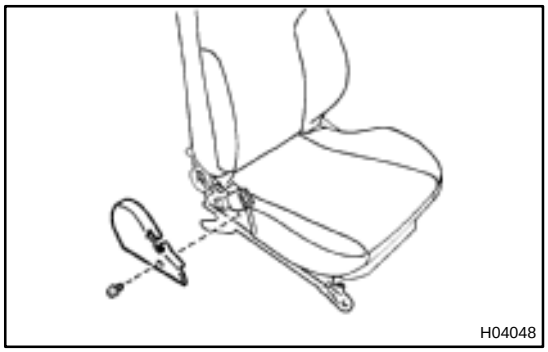

8. INSTALL INNER SHIELD

Install the inner shield with screw.

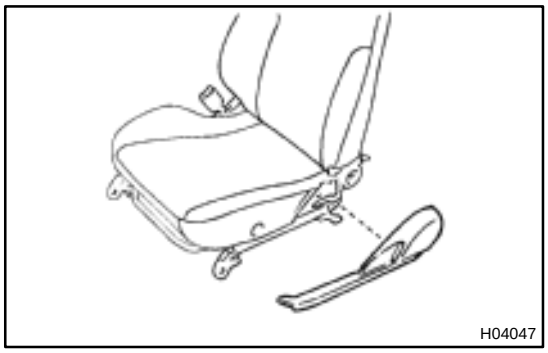

9. INSTALL THESE PARTS:

(a) Outer shield

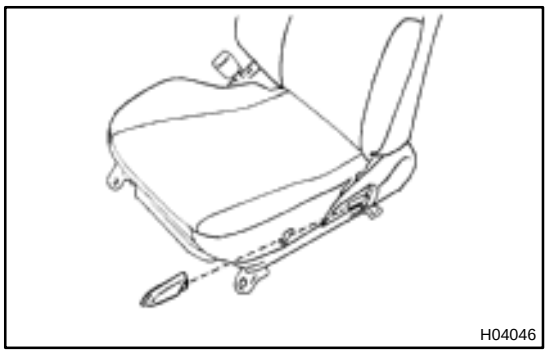

(b) Reclining adjuster release knob

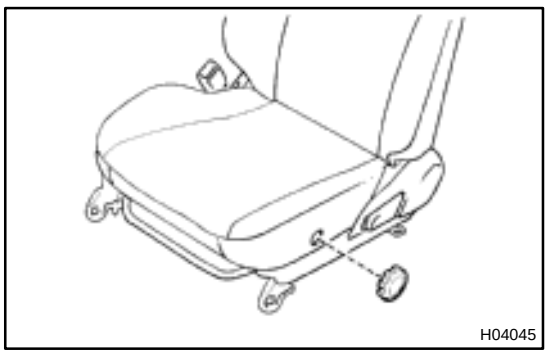

(c) w/ Vertical adjuster:
Vertical adjuster knob

BO1GS–01

REMOVAL

REMOVE FRONT SEAT

(a) Using a screwdriver, remove the seat track covers.

HINT:

Tape the screwdriver tip before use.

(b) Remove the 4 bolts.

(c) Remove the front seat.

NOTICE:

Be careful not to damage the body.

BO1G0–01

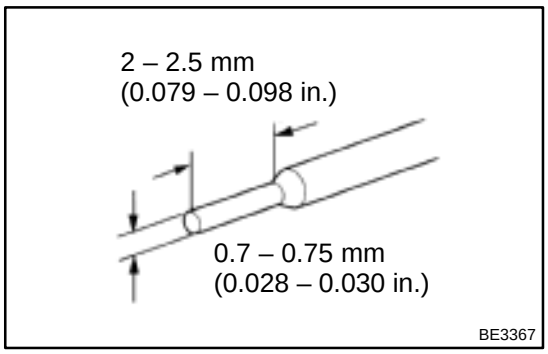

ADJUSTMENT

ADJUST WASHER NOZZLE

Using a tool like that shown in the illustration, change the direction of the nozzle hole to adjust the point where washer fluid hits the windshield.

FRONT WIPER AND WASHER

COMPONENTS

BO1FX–01

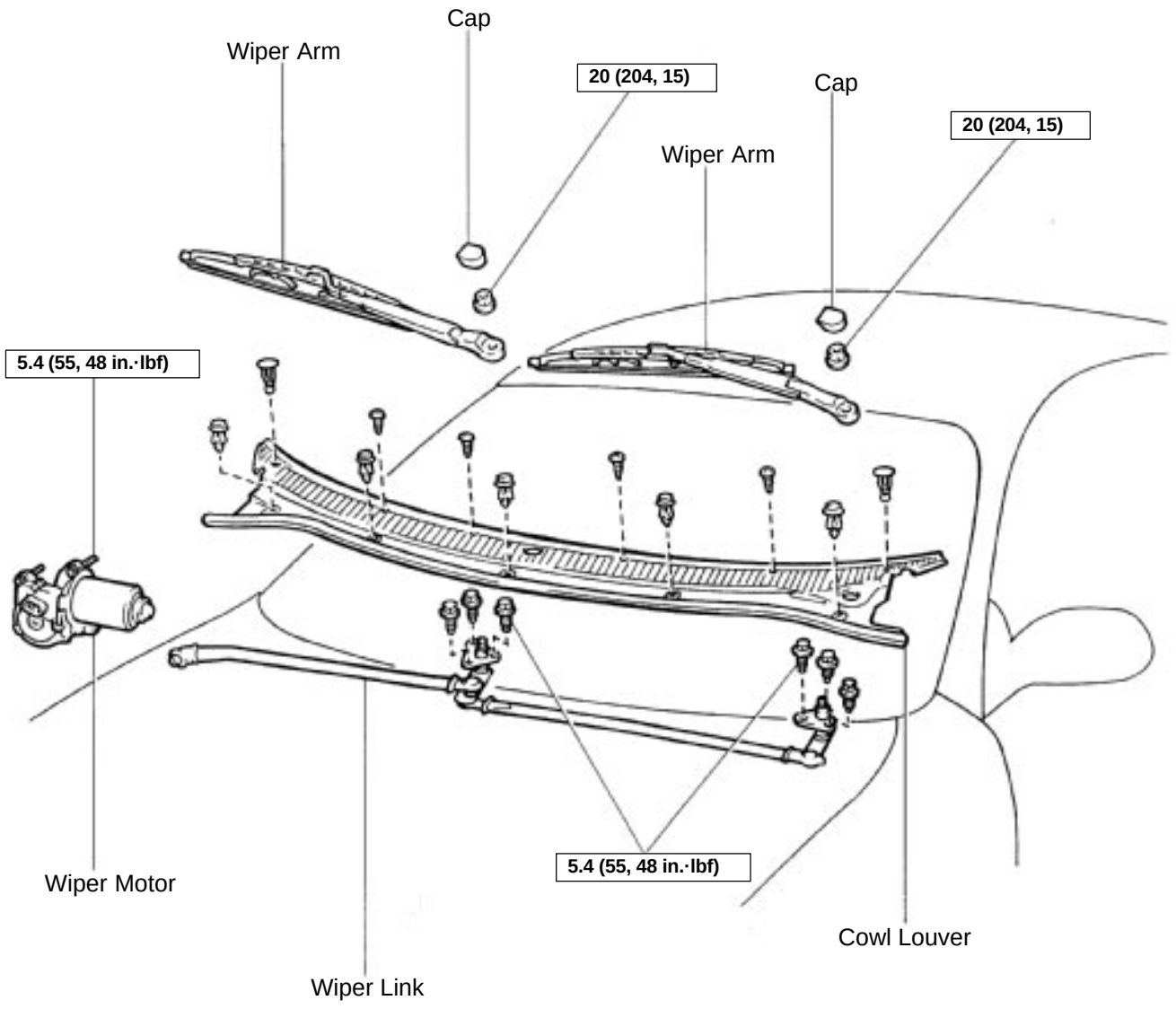

N·m (kgf·cm, ft·lbf) : Specified torque

N16736

BO1FZ–01

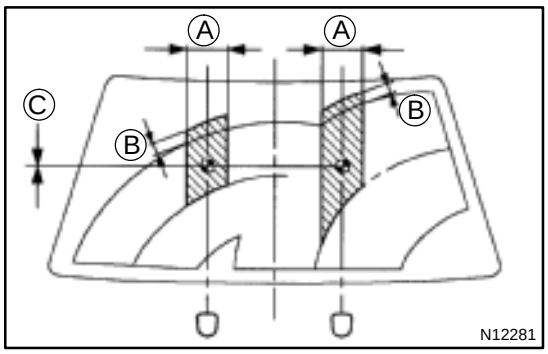

INSPECTION

INSPECT WASHER NOZZLE

(a) While operating the washer, check whether the upper point where the washer fluid hits the windshield and the upsurge area are within the range indicated by the hatched line.
”A”: Approx. 150 mm (5.91 in.)
”B”: Approx. 50 mm (1.99 in.)
”C”: Approx. 0–50 mm (0–1.99 in.)

(b) Check if the lower point where the washer fluid hits the windshield is within the range of the wiping pattern (the area of the glass which is wiped by the wiper blades).

BO1G1–01

INSTALLATION

Installation is in the reverse order of removal (See page BO–20).

BO1FY–01

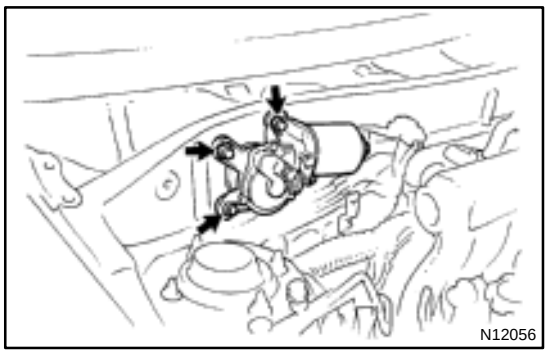
N12056

REMOVAL

1. REMOVE THESE PARTS:

(a) Wiper arms

Torque: 20 N·m (204 kgf·cm, 15 ft·lbf)

(b) Cowl louver

2. REMOVE WIPER MOTOR

(a) Disconnect the connector, then unfasten the 4 bolts.

Torque: 5.4 N·m (55 kgf·cm, 48 in.·lbf)

(b) Connect the claw of the wiper link to the panel.

(c) Disconnect the motor from the wiper link and remove it.

3. REMOVE THESE PARTS:

(a) Wiper link

Torque: 5.4 N·m (55 kgf·cm, 48 in.·lbf)

(b) Window washer nozzle

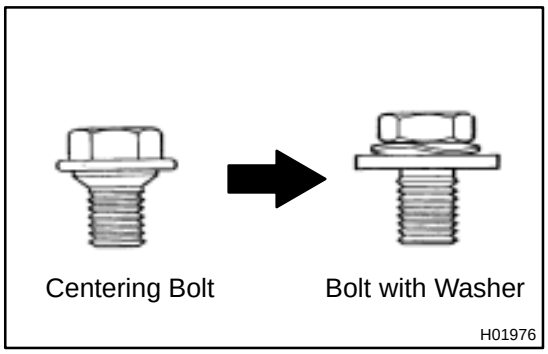

HOOD

ADJUSTMENT

BO1FM–02

HINT:

Since the centering bolt is used as the hood hinge set bolt, the hood cannot be adjusted with it on. Substitute the bolt with washer for the centering bolt.

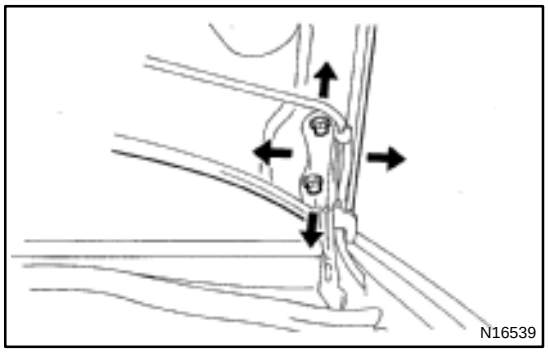

1. ADJUST HOOD IN FORWARD/REARWARD AND LEFT/RIGHT DIRECTIONS

Adjust the hood by loosening the hood side hinge bolts.

Torque: 13 N·m (130 kgf·cm, 9.4 ft·lbf)

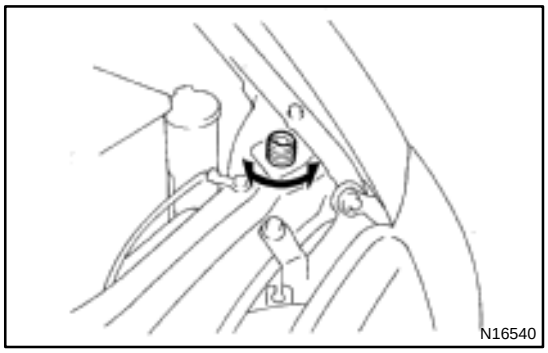

2. ADJUST FRONT EDGE OF HOOD IN VERTICAL DIRECTIONS

Adjust the hood by turning the cushions.

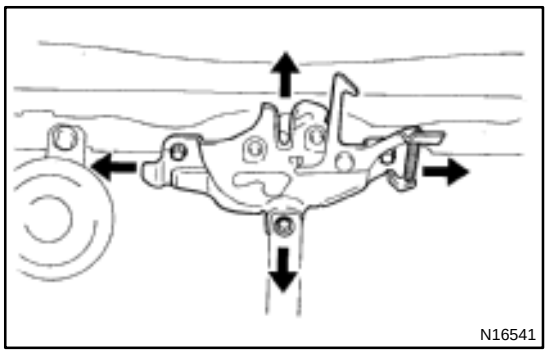

3. ADJUST HOOD LOCK

Adjust the lock by loosening bolts.

Torque: 8.3 N·m (85 kgf·cm, 74 in.·lbf)

INSTRUMENT PANEL

BO1GJ–02

COMPONENTS

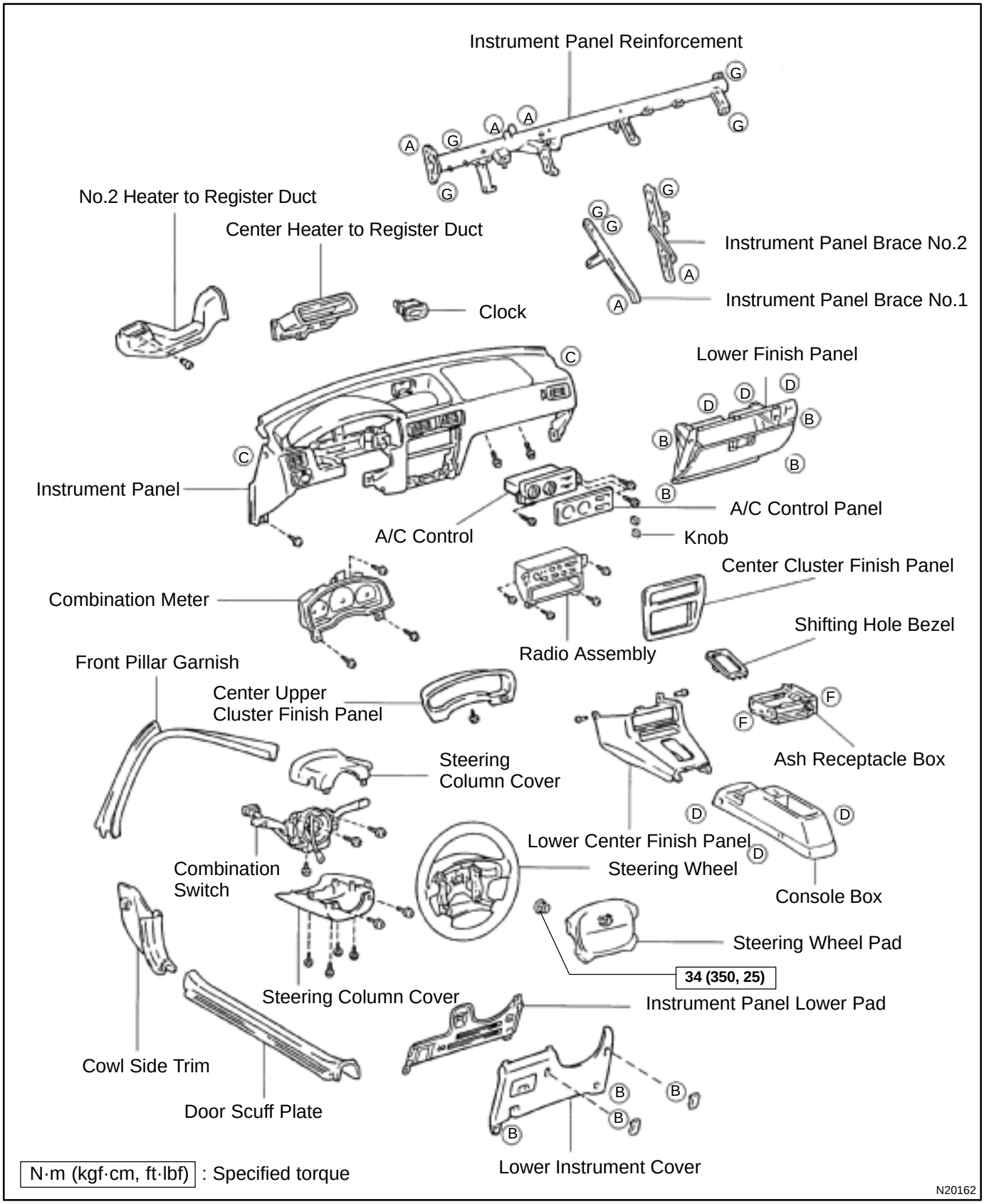

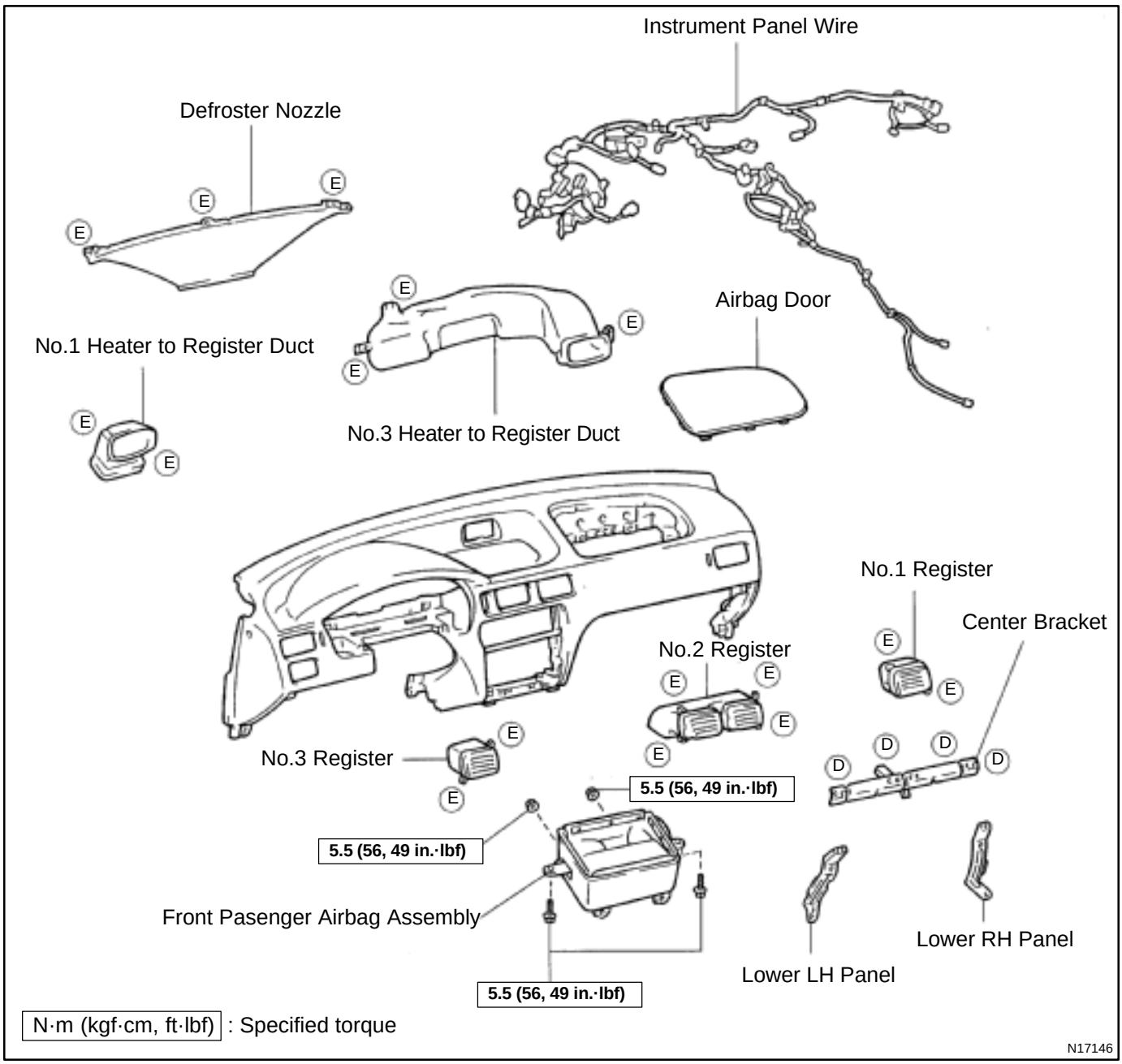
Instrument Panel Wire
Defroster Nozzle
E
No.1 Heater to Register Duct
No.3 Heater to Register Duct
Airbag Door
No.1 Register
Center Bracket
No.2 Register
No.3 Register
D
5.5 (56, 49 in.·lbf)
Front Pasenger Airbag Assembly
Lower LH Panel
Lower RH Panel
N·m (kgf·cm, ft·lbf) : Specified torque
N17146

HINT:
Screw shapes and size are indicated in the table below. The code (A – H) correspond to those indicated on the previous page.

Code	Shape	Size	Code	Shape	Size	Code	Shape	Size
A	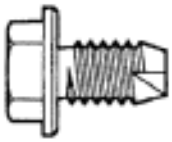	ø = 8 (0.31) L = 15 (0.59)	B	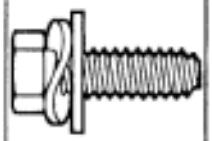	ø = 6 (0.24) L = 22 (0.87)	C		ø = 6 (0.24) L = 20 (0.55)
D	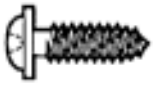	ø = 5 (0.20) L = 16 (0.63)	E	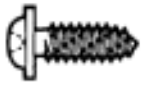	ø = 5 (0.20) L = 14 (0.55)	F		ø = 5 (0.20) L = 12 (0.47)
G		ø = 8 (0.31)	H		ø = 6 (0.24)			

V06938

BO35T–01

DISASSEMBLY

1. REMOVE THESE PARTS:

(a) Defroster nozzle
(b) No.3 heater to register duct
(c) No.1 heater to register duct
(d) No.1 register
(e) No.3 register
(f) No.2 register

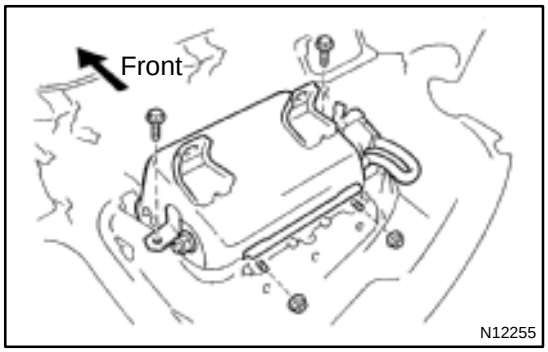

2. REMOVE FRONT PASSENGER AIRBAG ASSEMBLY

(a) Remove the 2 bolts, 2 nuts and the front passenger airbag assembly.
Torque: 5.5 N·m (56 kgf·cm, 49 in.·lbf)
(b) Remove the airbag door.

CAUTION:

- **Do not store the front passenger airbag assembly with the airbag deployment direction facing down.**
- **Never disassemble the front passenger airbag assembly.**

NOTICE:

- **When installing the instrument panel, take care that the airbag wire harness does not interfere with other parts and is not pinched between other parts.**
- **When installing the instrument panel box, carefully pul out the airbag wire harness from the glove compartment upper hole.**

3. REMOVE THESE PARTS:

(a) Center bracket
(b) Lower RH panel
(c) Lower LH panel
(d) Instrument panel wire

BO1GN–01

INSTALLATION

Installation is in the reverse order of removal (See page BO–54).

REASSEMBLY

Reassembly is in the reverse order of disassembly (See page BO–56).

BO35S–01

REMOVAL

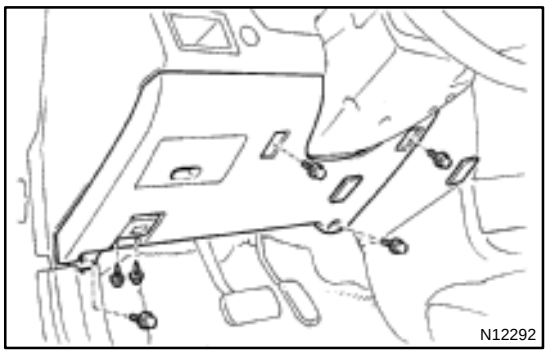

1. REMOVE THESE PARTS:

(a) Front pillar garnish
(b) Cowl side trim
(c) Door scuff plate

2. REMOVE STEERING WHEEL
(See page SR–12)

3. REMOVE LOWER INSTRUMENT COVER

(a) Remove the 2 screws and the hood lock release lever.
(b) Remove the 2 hole covers.
(c) Remove the 4 bolts and the lower cover.

4. REMOVE THESE PARTS:

(a) Center upper cluster finish panel
(b) Steering column covers
(c) Combination switch
(d) Combination meter

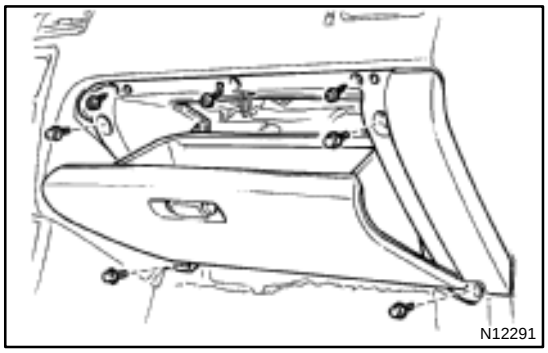

5. REMOVE LOWER FINISH PANEL

(a) Remove the 4 bolts and 3 screws.
(b) Remove the panel by pulling.

6. DISCONNECT FRONT PASSENGER AIRBAG CONNECTOR (See Page RS–22)

7. REMOVE THESE PARTS:

(a) Shifting hole bezel
(b) Console box
(c) Center cluster finish panel
(d) Ash receptacle box
(e) Radio assembly
(f) A/C control panel
(g) A/C control

8. REMOVE LOWER CENTER FINISH PANEL

Remove the 2 clips and panel.

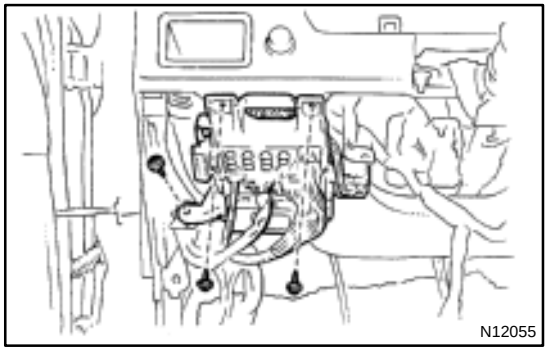

9. REMOVE JUNCTION BLOCK NO.1

Remove the 3 screws and J/B No.1.

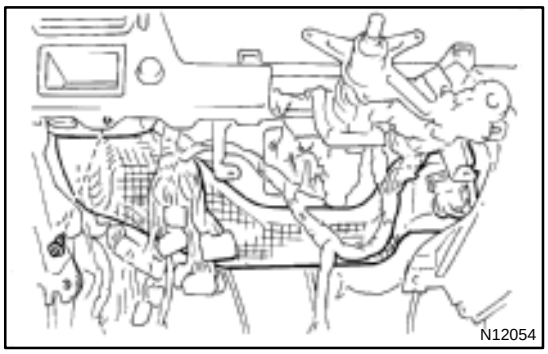

10. REMOVE NO.2 HEATER TO REGISTER DUCT

Remove the clip and the duct.

11. REMOVE CLOCK HOLE COVER

Using a screwdriver, remove the clock then disconnect the connector.

HINT:

Tape the screwdriver tip before use.

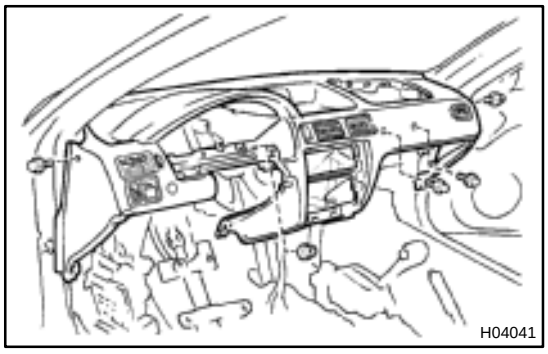

12. REMOVE INSTRUMENT PANEL

Remove the 4 bolts, nut and the instrument panel.

13. REMOVE THESE PARTS:

(a) Center heater to register duct
(b) Instrument panel brace No.1
(c) Instrument panel brace No.2
(d) Instrument panel reinforcement

BO1FU–01

ADJUSTMENT

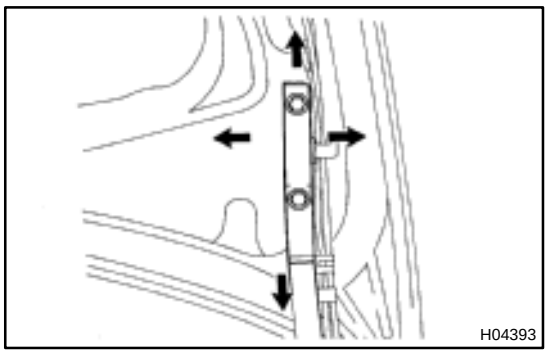

1. ADJUST DOOR IN FORWARD/REARWARD AND LEFT/RIGHT DIRECTIONS

(a) Adjust the door by loosening the door hinge bolts.
Torque: 7.4 N·m (75 kgf·cm, 65 in.·lbf)

(b) For vertical adjustment of front end of door, increase or decrease the number of washers.

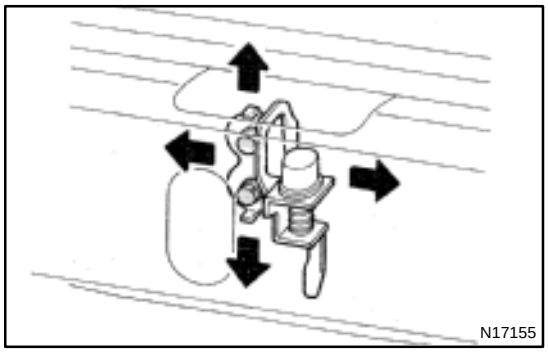

2. ADJUST DOOR LOCK STRIKER

Loosen the mounting bolts to adjust the lock striker.

LUGGAGE COMPARTMENT DOOR AND HINGE

BO1FR–01

COMPONENTS

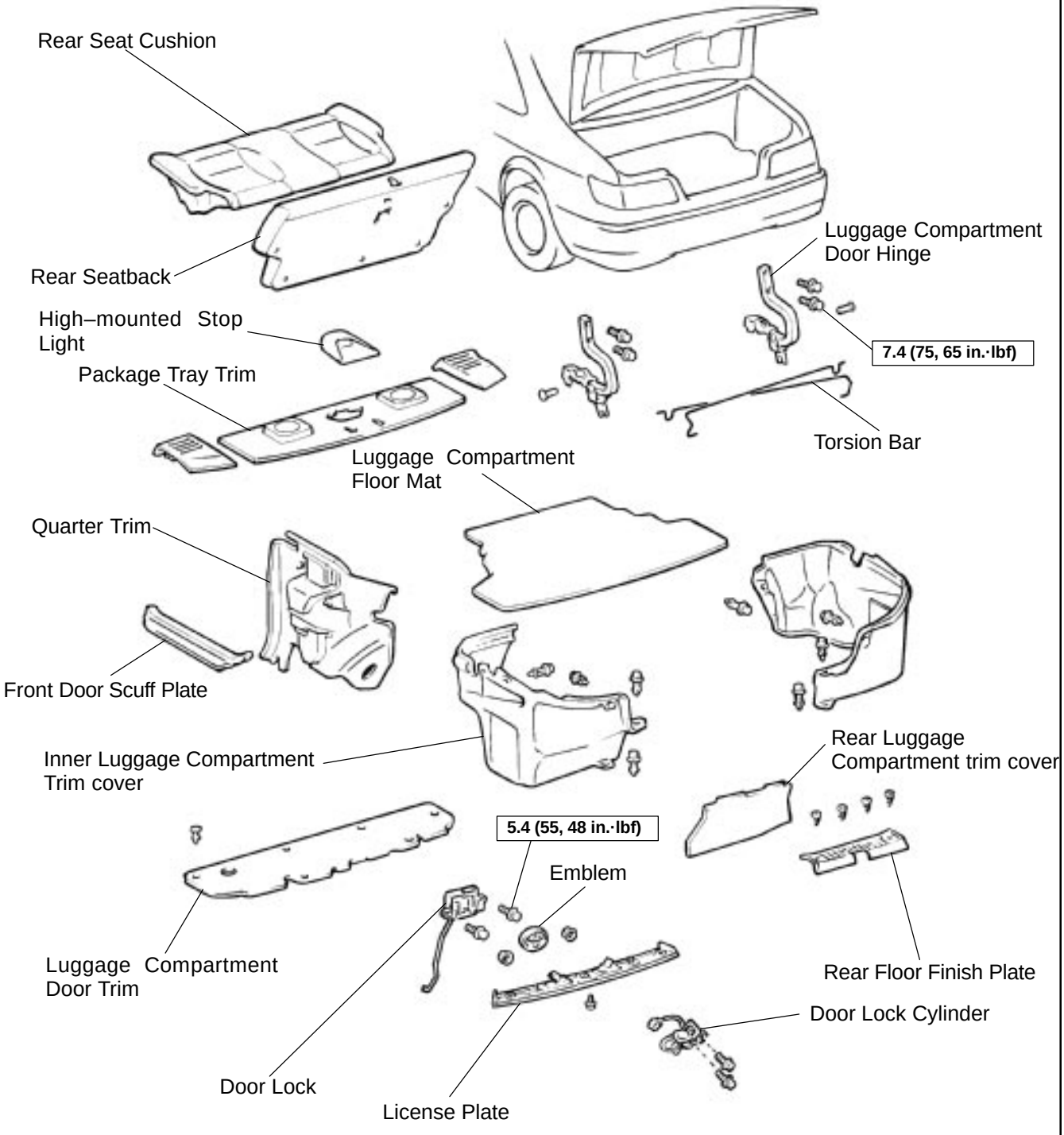

N·m (kgf·cm, ft·lbf) : Specified torque

H04038

BO1FT–01

DISASSEMBLY

1. REMOVE LUGGAGE COMPARTMENT DOOR TRIM

(a) Remove the 6 clips.

(b) Remove the luggage compartment door trim.

2. REMOVE DOOR LOCK CYLINDER

(a) Disconnect the link.

(b) Remove the 2 nuts and door lock.

3. REMOVE LICENSE PLATE

(a) Remove the 2 nuts.

(b) Remove the license plate light.

4. REMOVE DOOR LOCK

(a) Disconnect the wire.

(b) Remove the 2 bolts and the door lock.

BO1FW–01

INSTALLATION

Installation is in the reverse order of removal (See page BO–14).

REASSEMBLY

Reassembly is in the reverse order of disassembly (See page BO–15).

BO1FS–01

REMOVAL

1. REMOVE LUGGAGE COMPARTMENT DOOR

(a) Disconnect the connector.
(b) Using a clip remover, disconnect the clamps.
(c) Remove the 4 bolts and door.
Torque: 7.4 N·m (75 kgf·cm, 65 in.·lbf)

2. REMOVE THESE PARTS:

(a) Rear floor finish plate
(b) Luggage compartment floor mat
(c) Rear luggage compartment trim cover
(d) Inner luggage compartment trim cover
(e) High–mounted stop light
(f) Package tray trim
(g) Rear seat
(h) Front door scuff plate
(i) Quarter trim

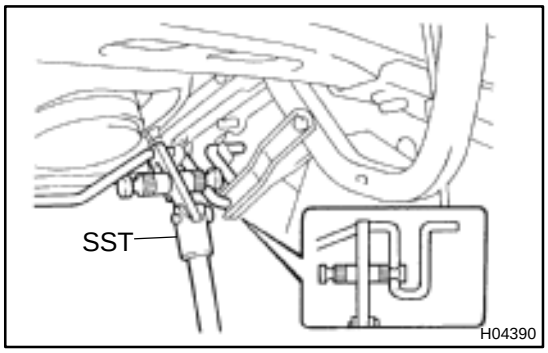

3. REMOVE TORSION BAR

(a) Install SST to the torsion bar on the hinge side.
SST 09804–24010

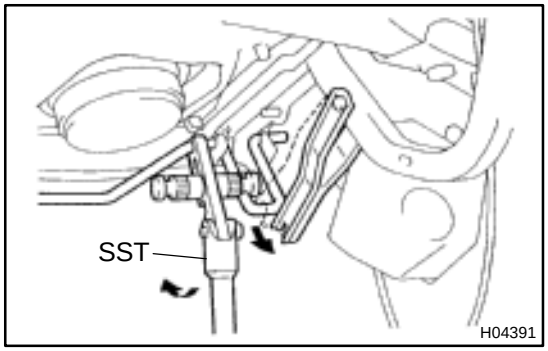

(b) Push down on SST, and pull the luggage compartment door hinge from the torsion bar.

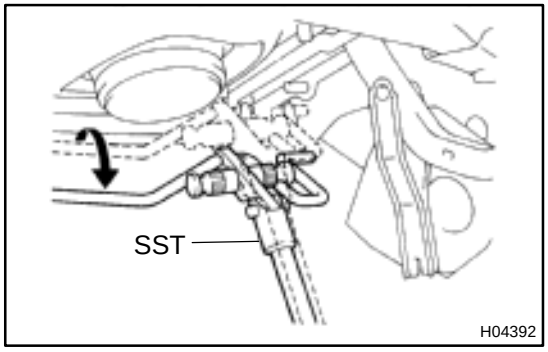

(c) Slowly lift SST, and remove the torsion bar from the torsion bar bracket with SST.
(d) Remove the torsion bar.
(e) Do the same for the other side.

QUARTER WINDOW GLASS

COMPONENTS

BO1G8–01

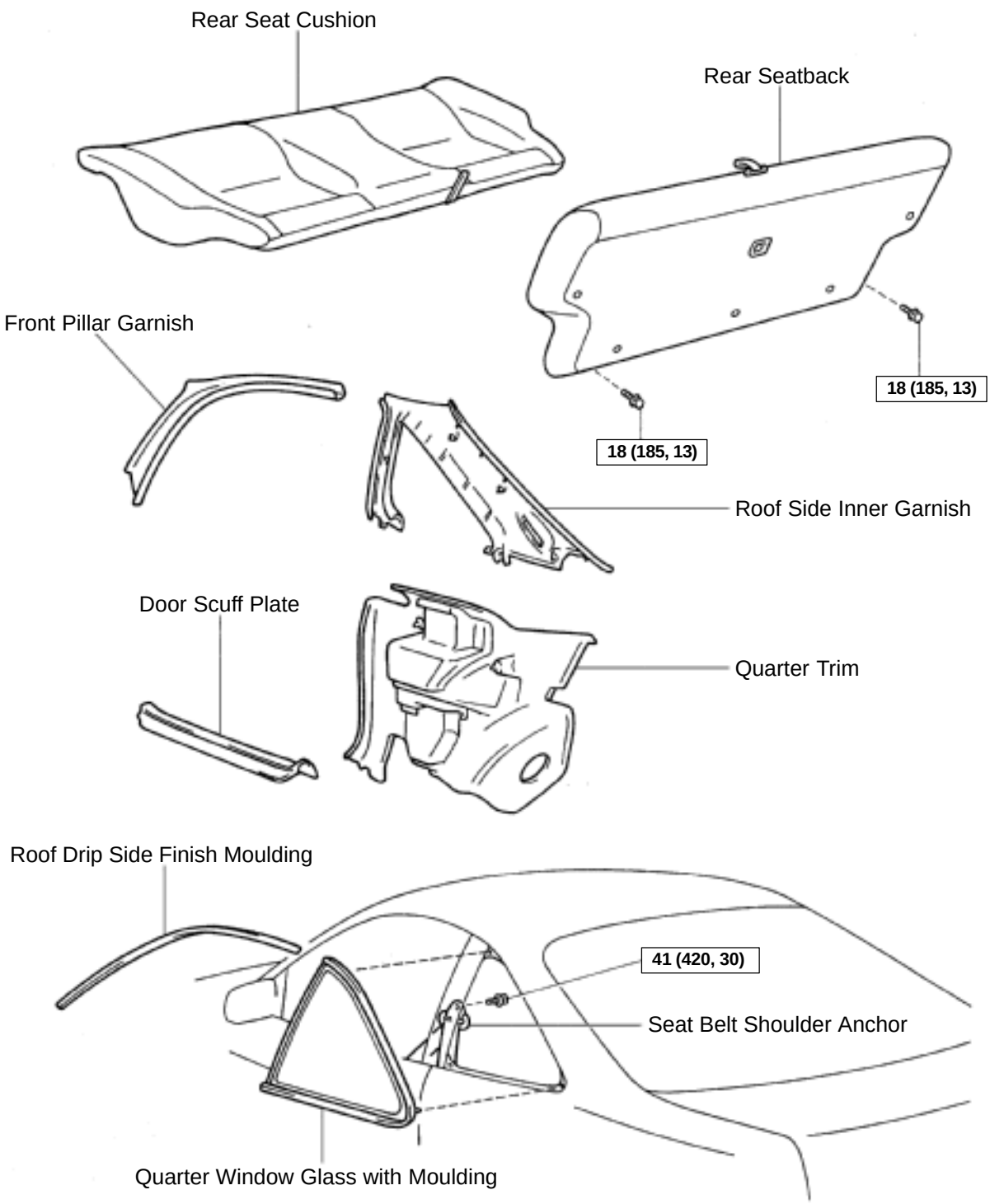

N·m (kgf·cm, ft·lbf) : Specified torque

N16556

BO1GA–01

INSTALLATION

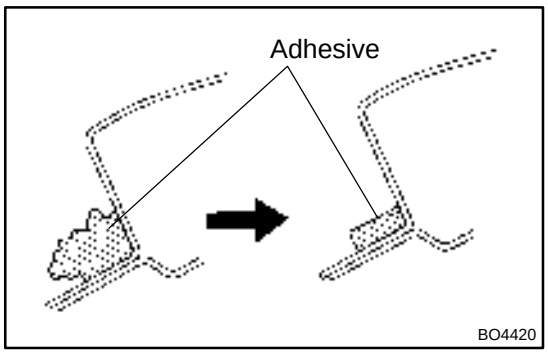

1. CLEAN AND SHAPE CONTACT SURFACE OF BODY

(a) Using a knife, cut away any rough areas on the body.

HINT:

Leave as much of the adhesive on the body as possible.

(b) Clean the cutting surface of the adhesive with a piece of shop rag saturated with cleaner.

HINT:

Even if all the adhesive has been removed, clean the body.

2. CLEAN REMOVED GLASS

(a) Using a scraper, remove the adhesive sticking to the glass.

(b) Clean the glass with cleaner.

NOTICE:

Do not touch the glass after cleaning it.

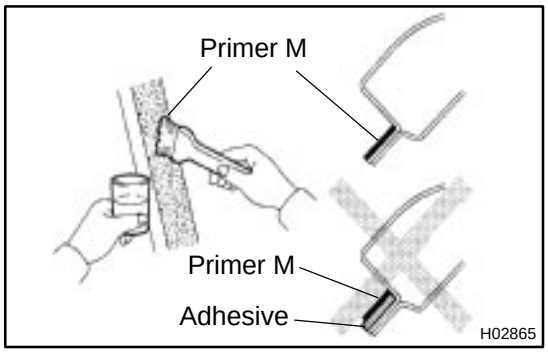

3. COAT CONTACT SURFACE OF BODY WITH PRIMER "M"

Using a brush, coat the contact surface on the body with Primer M.

NOTICE:

- **Let the primer coating dry for 3 minutes or more.**
- **Do not coat Primer M to the adhesive.**
- **Do not keep any of the opened Primer M for later use.**

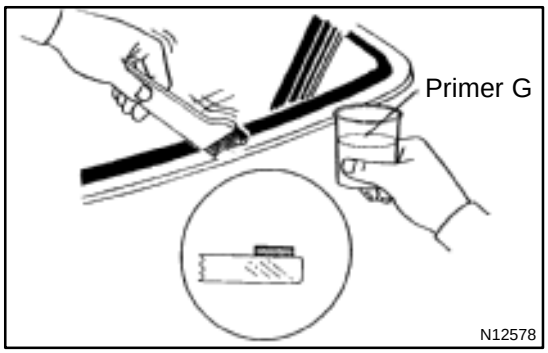

4. COAT CONTACT SURFACE OF GLASS WITH PRIMER "G"

(a) Using a brush or sponge, coat the edge of the glass and the contact surface with Primer G.

(b) When the primer is coated wrongly to the area other than the specified, wipe it off with a clean shop rag before the primer dries.

NOTICE:

- **Let the primer coating dry for 3 minutes or more.**
- **Do not keep any of the opened Primer G for later use.**

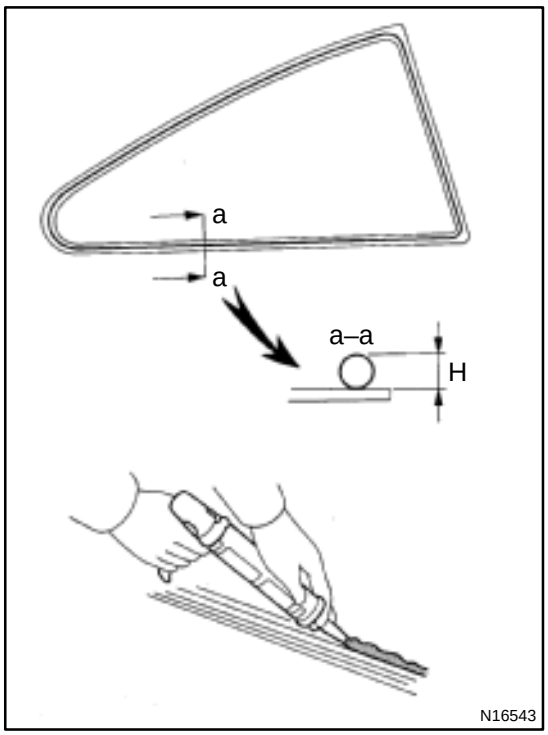

5. APPLY ADHESIVE

(a) Cut off the tip of the cartridge nozzle.
Part No. 08850–00801 or equivalent

Temperature	Tackfree time
35 ˚C (95 ˚F)	15 minutes
20 ˚C (68 ˚F)	100 minutes
5 ˚C (41 ˚F)	8 hours

(b) Load the cartridge into the sealer gun.
(c) Coat the glass with adhesive as shown.
H: 12 mm (0.47 in.)

6. INSTALL QUARTER WINDOW GLASS

(a) Install the glass to the body.
(b) Use adhesive tape to keep the glass tight against the body.

NOTICE:
Take care not to drive the vehicle during the time described in the table below.

Temperature	Minimum time prior to driving the vehicle
35 ˚C (95 ˚F)	1.5 hours
20 ˚C (68 ˚F)	5 hours
5 ˚C (41 ˚F)	24 hours

7. INSPECT FOR LEAKS AND REPAIR

(a) Perform a leak test after the hardening time has elapsed.
(b) Seal any leak with sealant.
Part No. 08833–00030 or equivalent.

8. INSTALL THESE PARTS:

(a) Roof side inner garnish
(b) Quarter trim
(c) Rear seat belt floor anchor
(d) Front seat belt floor anchor and shoulder anchor
Torque: 41 N·m (420 kgf·cm, 30 ft·lbf)
(e) Door scuff plate
(f) Front pillar garnishes
(g) Rear seatback and seat cushion
Torque: 18 N·m (185 kgf·cm, 13 ft·lbf)

BO1G9–01

REMOVAL

1. REMOVE THESE PARTS:

(a) Rear seatback and seat cushion
(b) Front pillar garnishes
(c) Door scuff plate
(d) Front seat belt floor anchor and shoulder anchor
(e) Rear seat belt floor anchor

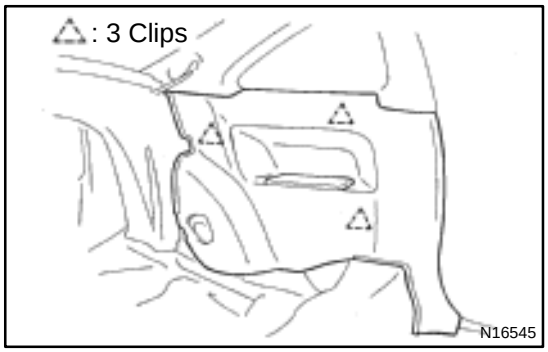

2. REMOVE QUARTER TRIM

Remove the quarter trim by pulling it.

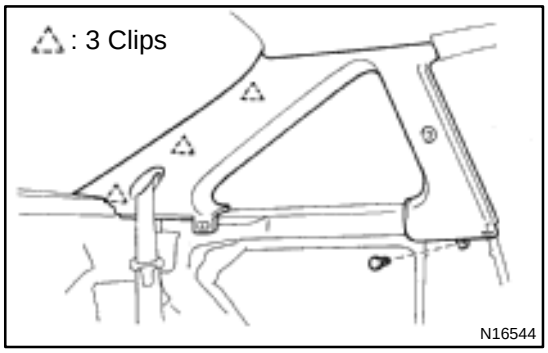

3. REMOVE ROOF SIDE INNER GARNISH

(a) Remove the clip.
(b) Remove the garnish by pulling it.

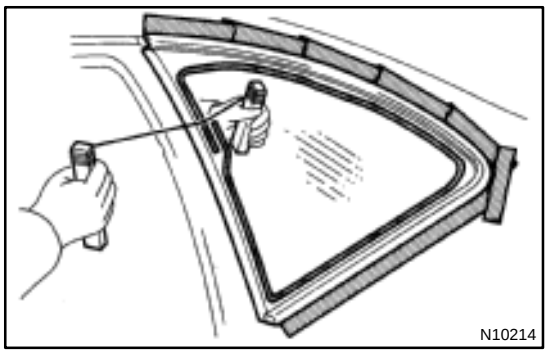

4. REMOVE QUARTER WINDOW GLASS

(a) Push piano wire through between body and glass from the interior.
(b) Tie both wire ends to a wooden block or similar object.

HINT:

Apply adhesive tape to the outer surface to keep the surface from being scratched.

NOTICE:

When separating the glass, take care not to damage the paint and exterior.

(c) Cut the adhesive by pulling the piano wire around it.

HINT:

Cut the adhesive areas as shown in the illustration, leaving the adhesive where the pins are.

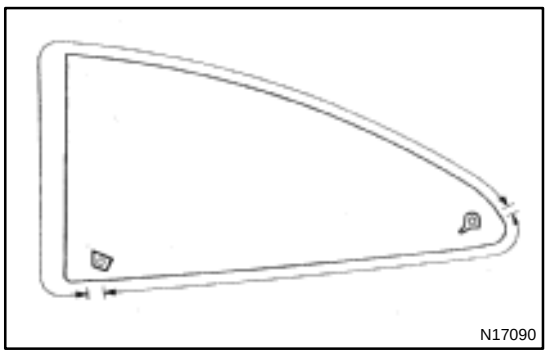

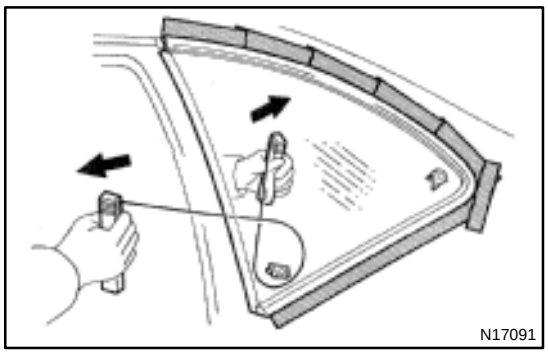

(d) Using piano wire as shown in the illustration, cut off the rest of the adhesive.

(e) Remove the glass.

NOTICE:

Leave as much of the adhesive on the body as possible when cutting off the glass.

ROOF DRIP SIDE FINISH MOULDING

COMPONENTS

BO1G2–01

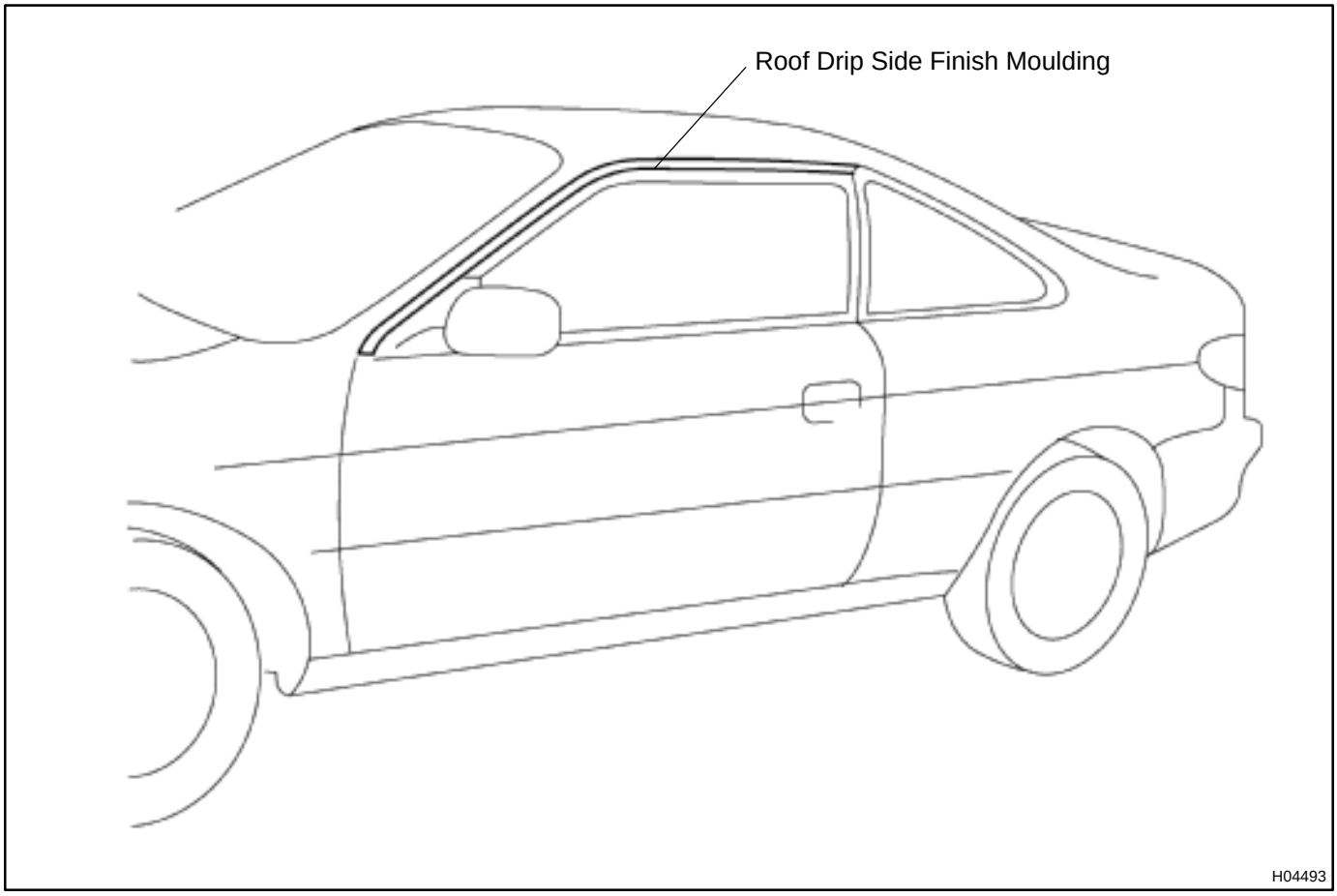

BO1G4–01

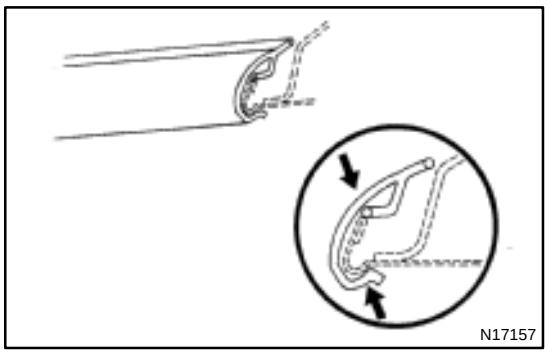

INSTALLATION

INSTALL ROOF DRIP SIDE FINISH MOULDING

Attach the upper edge of the moulding to the body flange. Tap on the moulding by hand.

BO1G3–01

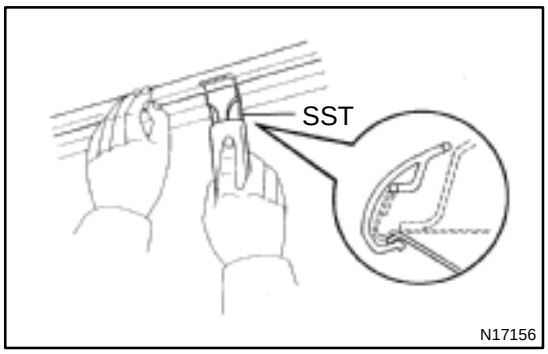

REMOVAL

REMOVE ROOF DRIP SIDE FINISH MOULDING

Using SST, pull off the roof drip moulding from front ends.

SST 09806–30010

REAR BUMPER

COMPONENTS

BO1FL–01

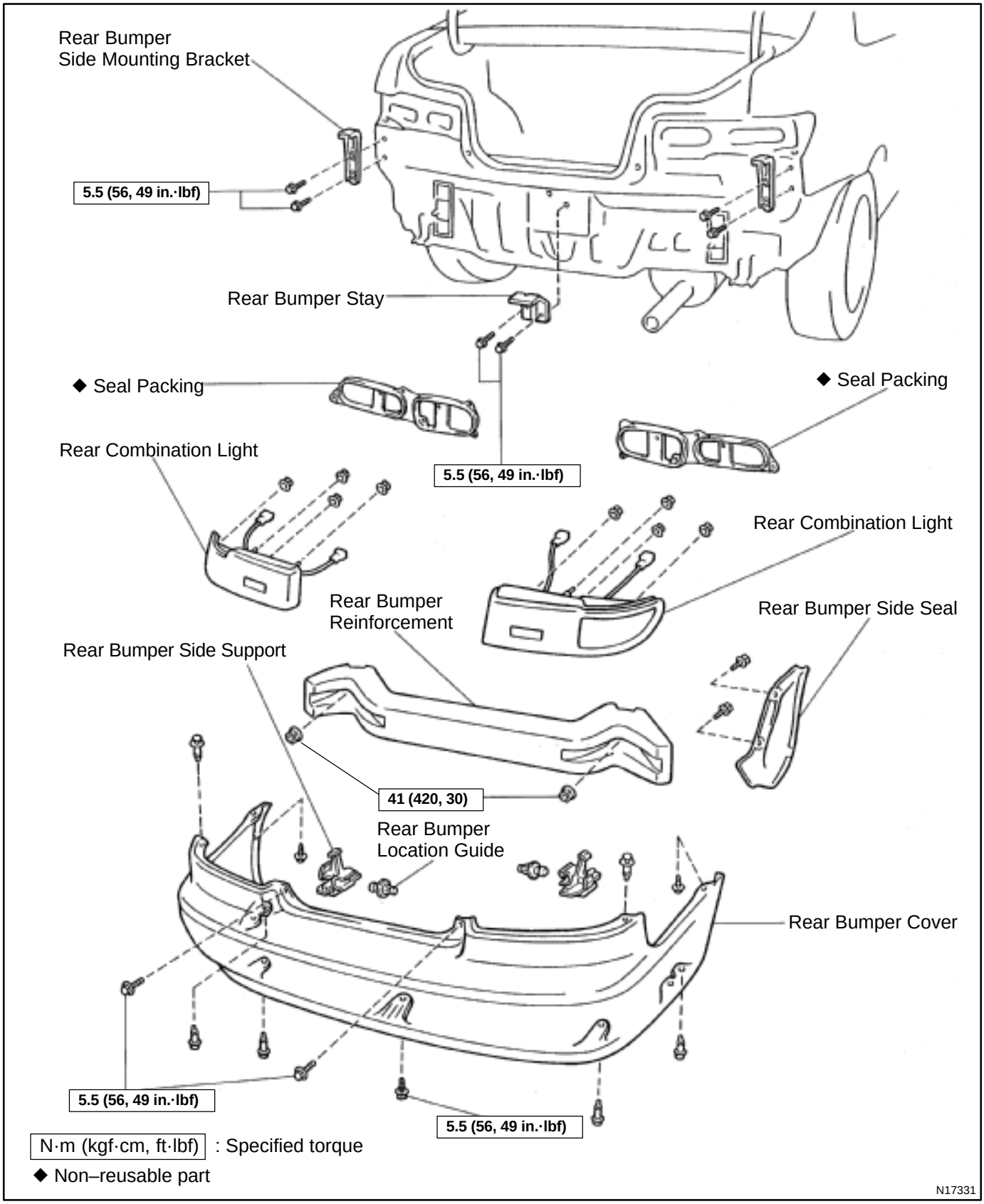

N·m (kgf·cm, ft·lbf) : Specified torque

◆ Non–reusable part

N17331

REAR SEAT

COMPONENTS

BO1GX–01

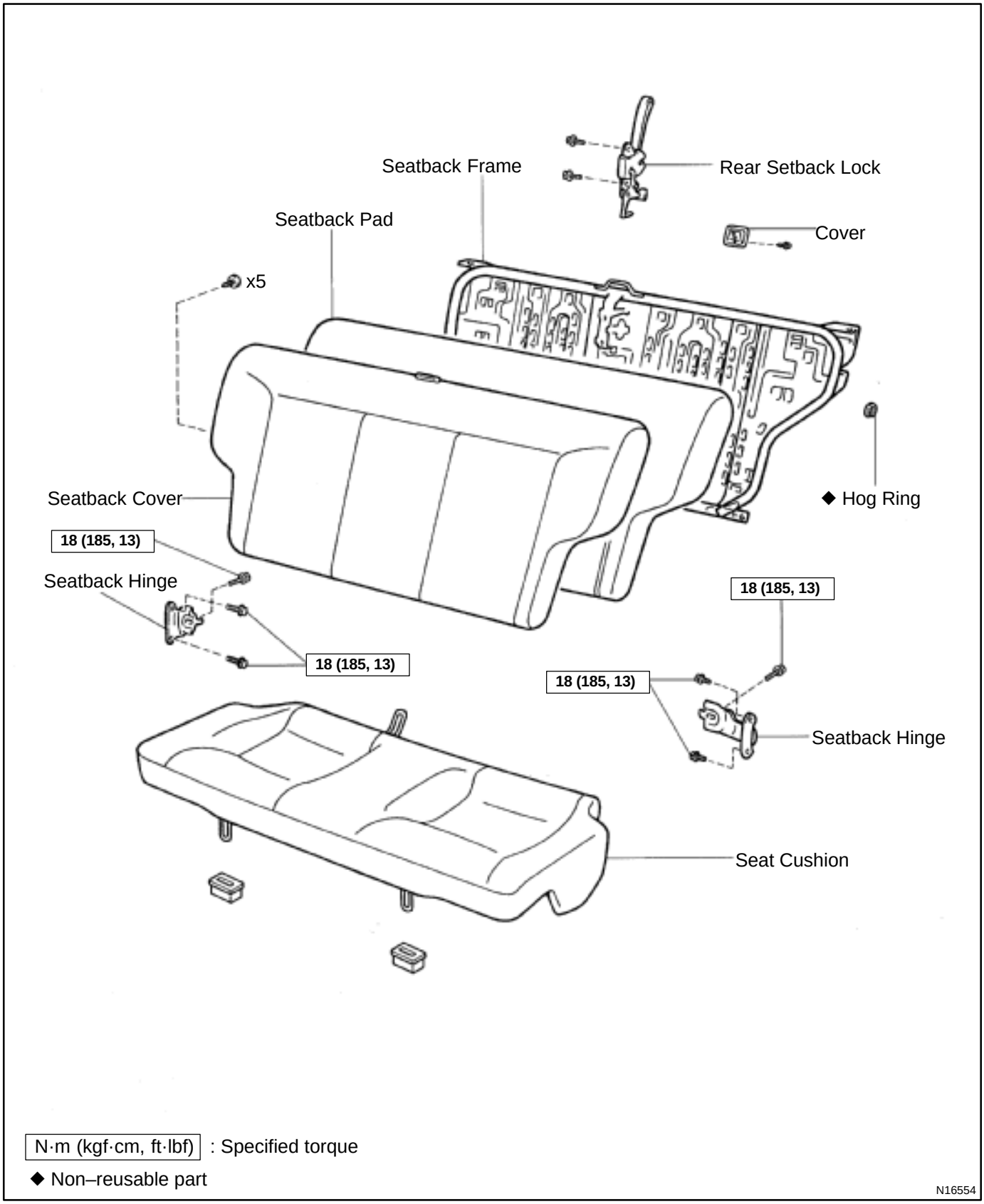

N·m (kgf·cm, ft·lbf) : Specified torque

◆ Non–reusable part

N16554

BO1GZ–01

DISASSEMBLY

1. REMOVE REAR SEATBACK LOCK COVER

(a) Remove the screw.

(b) Remove the cover.

2. REMOVE REAR SEATBACK LOCK

(a) Remove the 5 clips.

(b) Remove the 2 bolts.

(c) Remove the rear seatback lock.

3. REMOVE SEATBACK COVER

(a) Remove the hog rings and seatback frame from the seatback cover with pad.

(b) Remove the seatback cover from the seatback pad.

BO1H1–01

INSTALLATION

Installation is in the reverse order of removal (See page BO–72).

BO1H0–01

REASSEMBLY

Reassembly is in the reverse order of disassembly (See page BO–71).

BO1GY–01

REMOVAL

1. REMOVE SEAT CUSHION ASSEMBLY

(a) Remove the seat cushion assembly.

HINT:

Remove the rear seat inner with center belt from seat cushion slit to remove the seat cushion.

(b) Remove the 2 lock hooks.

2. REMOVE SEATBACK ASSEMBLY

(a) Release lock to lean the seatback to front.

(b) Remove the 2 bolts and seatback assembly.

Torque: 18 N·m (185 kgf·cm, 13 ft·lbf)

3. REMOVE SEATBACK HINGE

(a) Remove the 2 bolts and LH seatback hinge.

(b) Remove the 2 bolts and RH seatback hinge.

Torque: 18 N·m (185 kgf·cm, 13 ft·lbf)

BO1GH–01

ADJUSTMENT

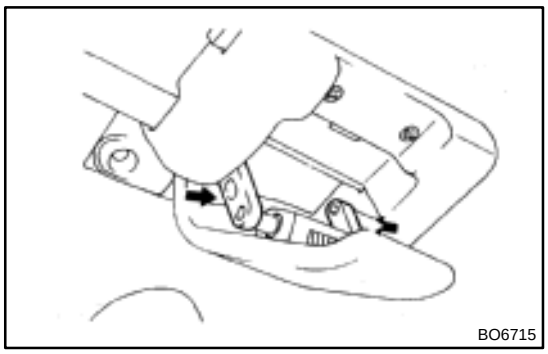

1. DISCONNECT LOCK HANDLE FROM LOCK BASE

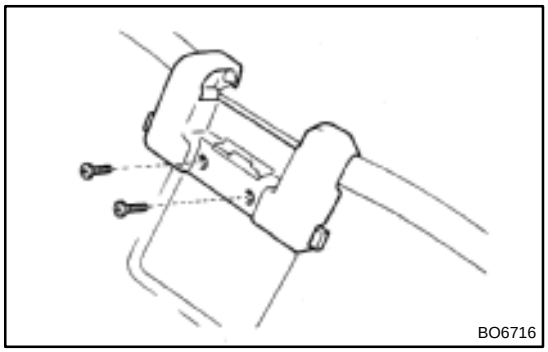

2. REMOVE LOCK GARNISH

Remove the 2 screws and the lock garnish.

3. CONNECT LOCK HANDLE TO LOCK BASE

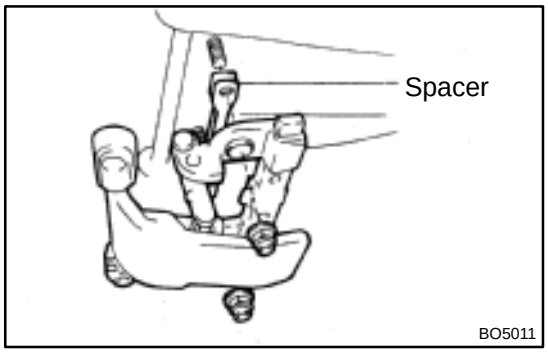

4. ADJUST REMOVABLE ROOF

(a) Remove the 2 nuts and the lock base.

(b) Adjust by increasing or decreasing the number of spacers.

(c) Install the lock base with the 2 nuts.

5. INSTALL LOCK GARNISH

Install the lock garnish with the 2 screws.

BO1GF–01

COMPONENTS

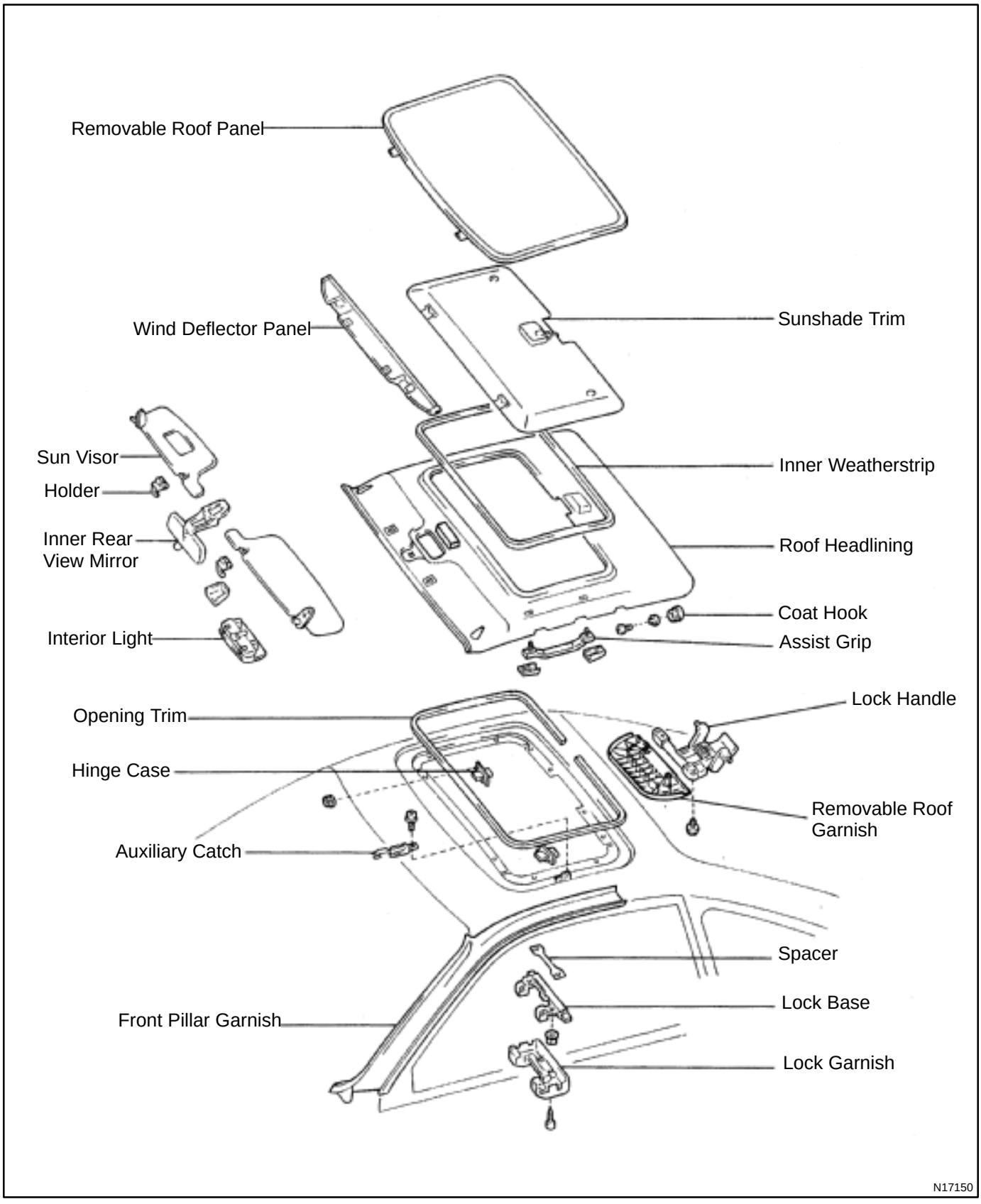

BO1GI–01

INSTALLATION

Installation is in the reverse order of removal (See page BO–46).

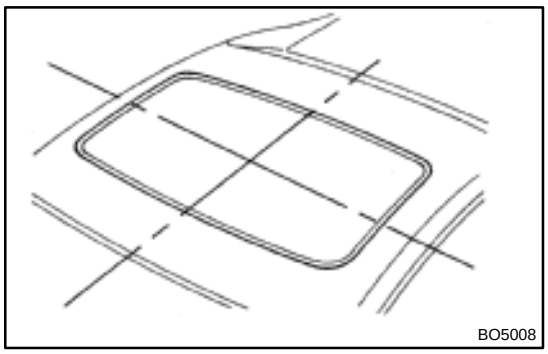

REMOVABLE ROOF

BO1GE–01

ON–VEHICLE INSPECTION

INSPECT REMOVABLE ROOF ALIGNMENT

(a) With the removable roof installed, check for water leakage.

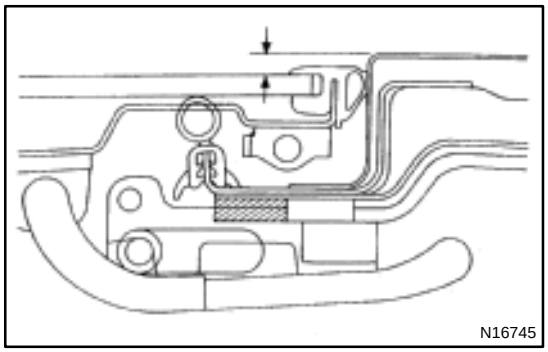

(b) Check for a difference in level between the removal roof and the roof panel.
Level: 2.0±0.5 mm (0.079±0.020 in.)

BO1GG–01

REMOVAL

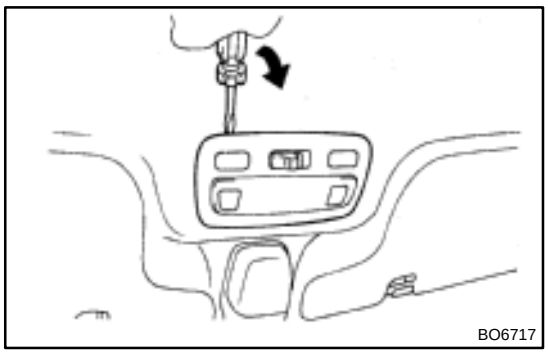

1. REMOVE SUNSHADE TRIM

2. REMOVE INTERIOR LIGHT

Using a screwdriver, remove the light, then disconnect the connector.

HINT:

Tape the screwdriver tip before use.

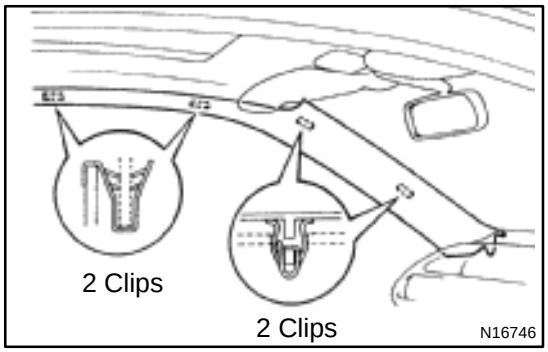

3. REMOVE THESE PARTS:

(a) Front pillar garnish
(b) Inner rear view mirror
(c) Sun visors and holders
(d) Assist grip
(e) Coat hook

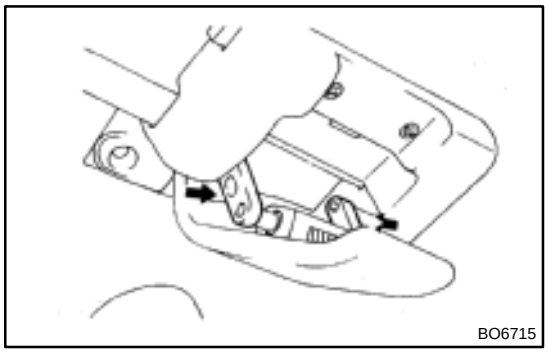

4. REMOVE REMOVABLE ROOF PANEL

(a) Disconnect the lock handle from the lock base.

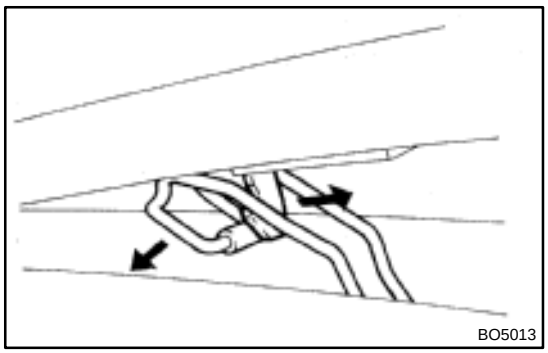

(b) Disconnect the auxiliary catch from the removable roof.

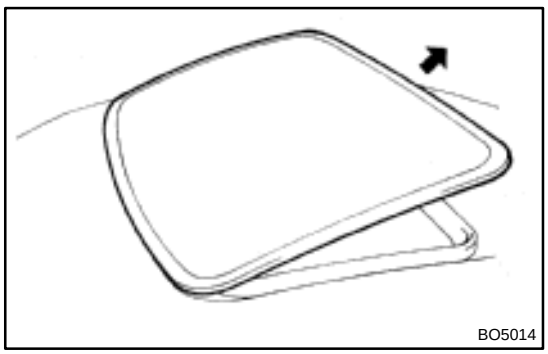

(c) Pull the removable roof rearward to remove it.

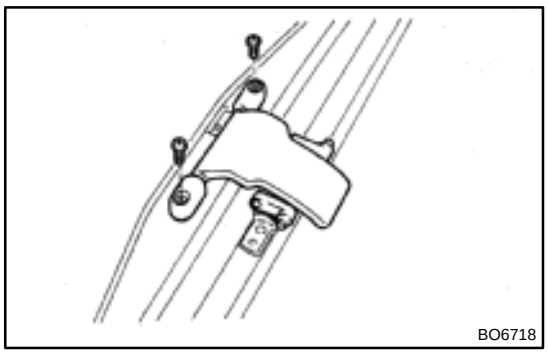

5. REMOVE LOCK HANDLE

Remove the 2 screws and the lock handle from the removable roof.

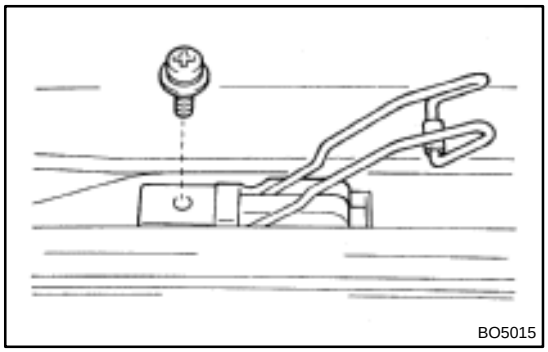

6. REMOVE AUXILIARY CATCH

Remove the screw and catch.

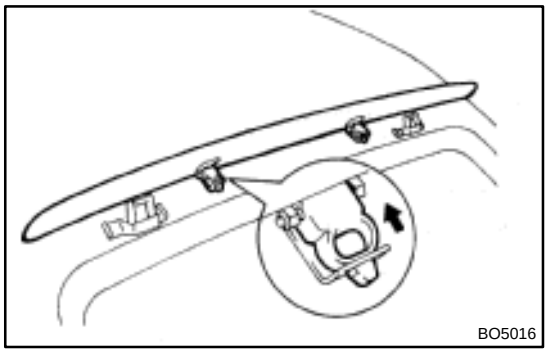

7. REMOVE WIND DEFLECTOR PANEL

Remove the 2 deflector clips while prying them with a screwdriver.

HINT:

Tape the screwdriver tip before use.

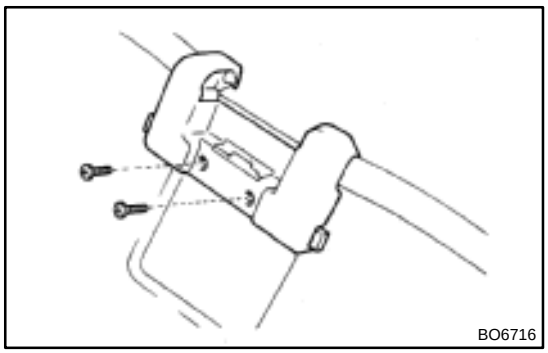

8. REMOVE LOCK GARNISH

Remove the 2 screws and the lock garnish.

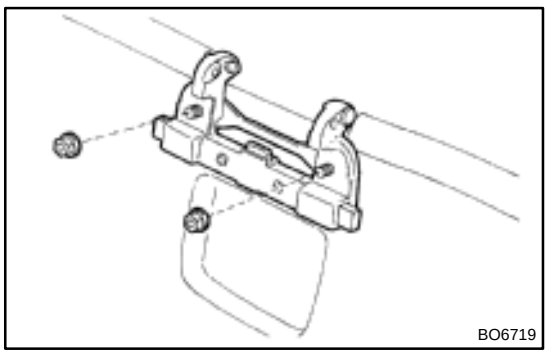

9. REMOVE LOCK BASE

Remove the 2 nuts, lock base and spacers.

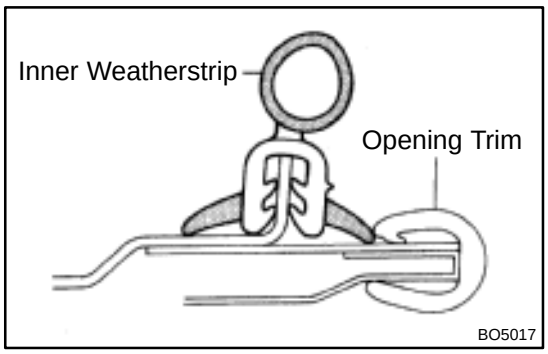

10. REMOVE OPENING TRIM

11. REMOVE INNER WEATHERSTRIP

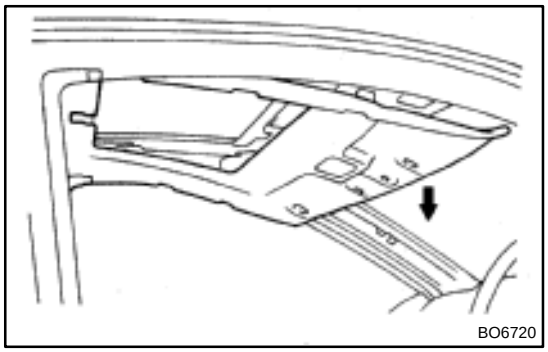

12. REMOVE HINGE CASE

(a) Pull down the roof headlining by hand.

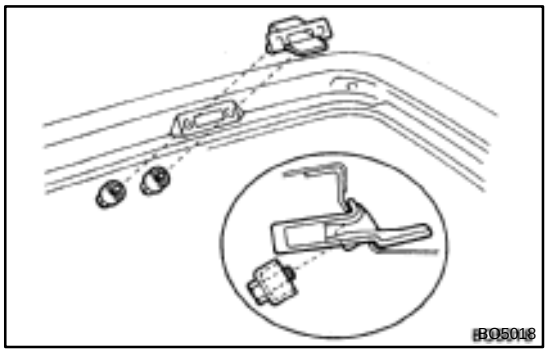

(b) Remove the 2 bolts and the hinge case.

ROOF HEADLINING

BO1GO–01

COMPONENTS

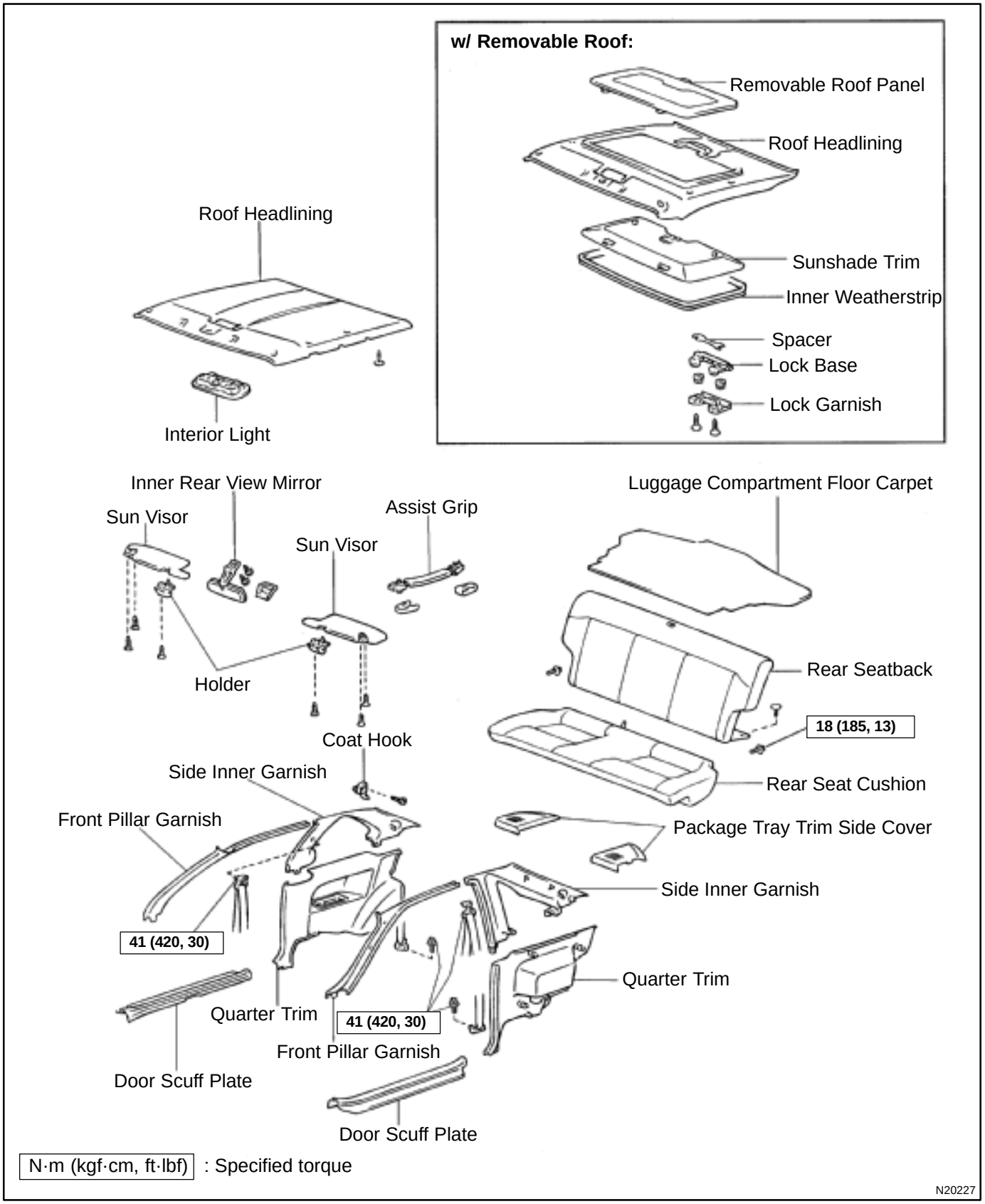

N20227

BO1GQ–01

INSTALLATION

Installation is in the reverse order of removal (See page BO–60).

BO1GP–01

REMOVAL

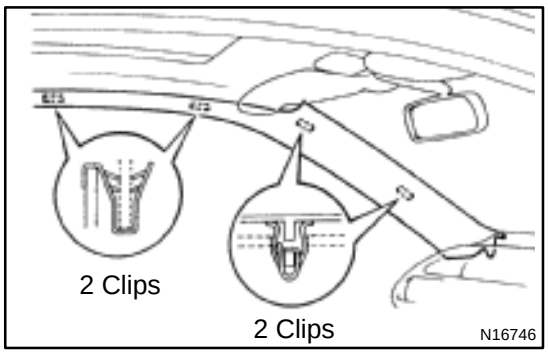

1. REMOVE THESE PARTS:

(a) Luggage compartment floor carpet
(b) Rear seat cushion
(c) Rear seatback
Torque: 18 N·m (185 kgf·cm, 13 ft·lbf)
(d) Front pillar garnish
(e) Inner rear view mirror
(f) Sun visor and holders
(g) Assist grip
(h) Coat hook
(i) Door scuff plate

2. REMOVE INTERIOR LIGHT

Using a screwdriver, remove the light, then disconnect the connector.

HINT:

Tape the screwdriver tip before use.

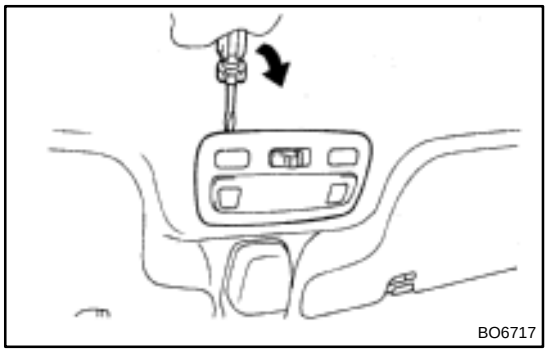

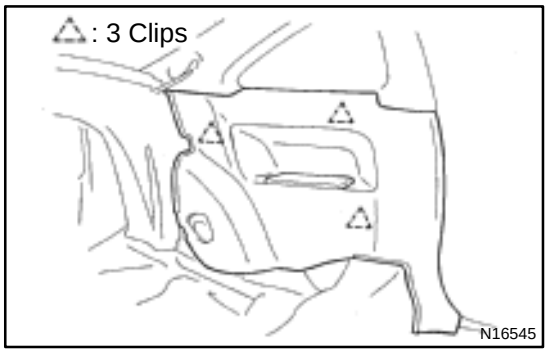

3. REMOVE QUARTER TRIM

Remove the quarter trim by pulling it.

4. REMOVE PACKAGE TRAY TRIM SIDE COVER

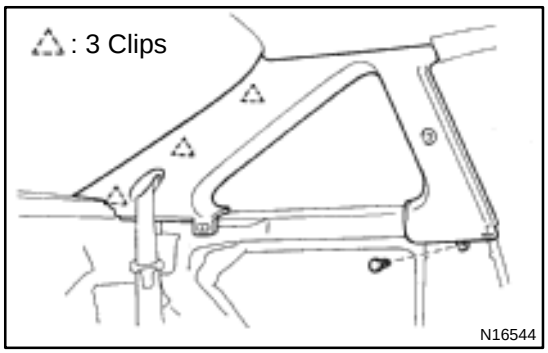

5. REMOVE ROOF SIDE INNER GARNISH

(a) Remove front seat belt floor anchor and shoulder anchor.
Torque: 41 N·m (420 kgf·cm, 30 ft·lbf)
(b) Remove rear seat belt floor anchor.
Torque: 41 N·m (420 kgf·cm, 30 ft·lbf)
(c) Remove the clip.
(d) Remove the garnish by pulling it.

6. REMOVE THESE PARTS:

(a) Sunshade trim
(b) Removable roof panel
(c) Opening trim
(d) Lock garnish and lock base

7. REMOVE ROOF HEADLINING

SEAT BELT

BO35W–01

COMPONENTS

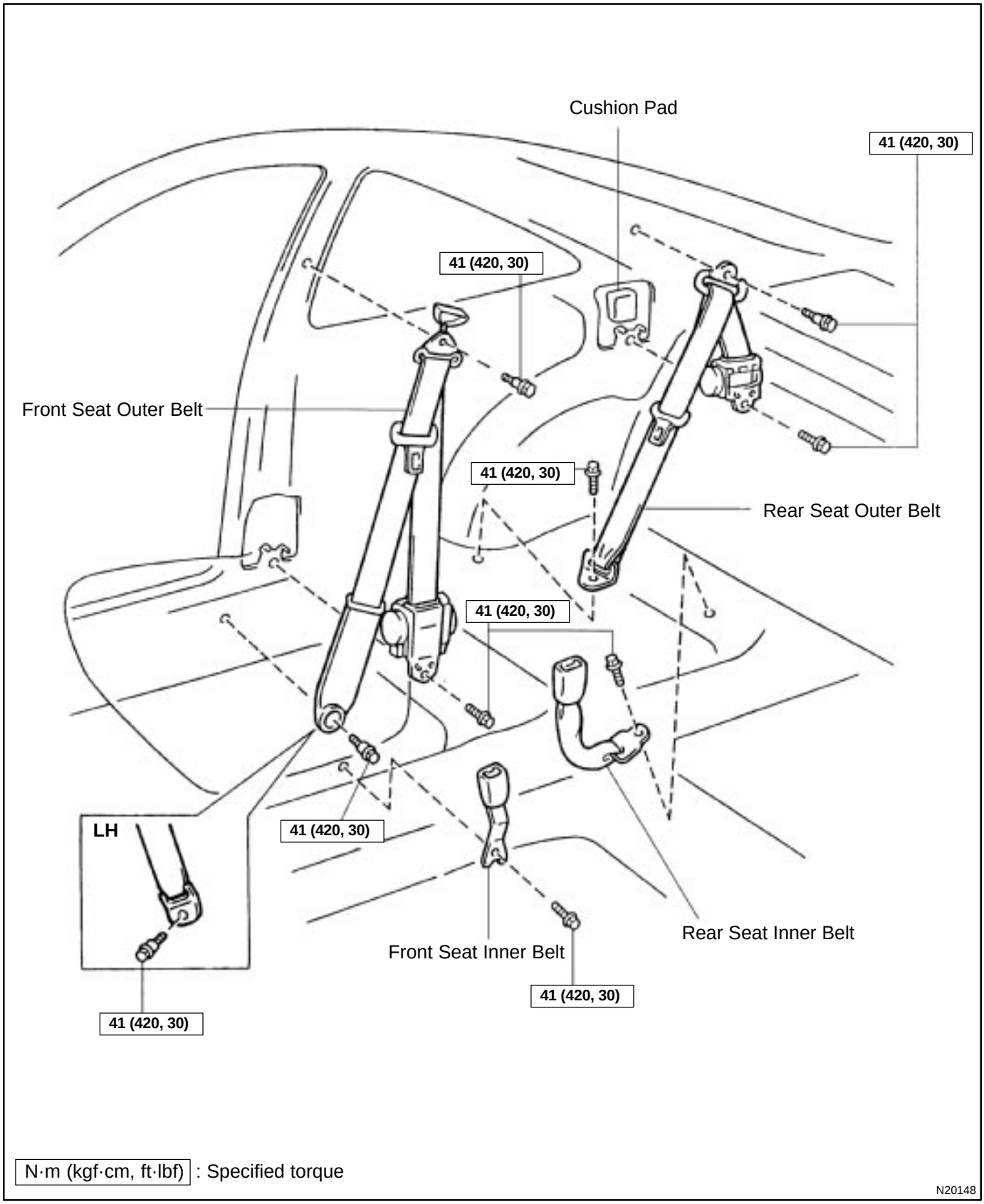

N·m (kgf·cm, ft·lbf) : Specified torque

N20148

BO1H3–02

INSPECTION

CAUTION:

Replace the seat belt assembly (outer belt, inner belt, bolts, nuts or sill–bar) if it has been used in a severe impact. The entire assembly should be replaced even if damage is not obvious.

1. RUNNING TEST (IN SAFE AREA)

(a) Fasten the front seat belts.

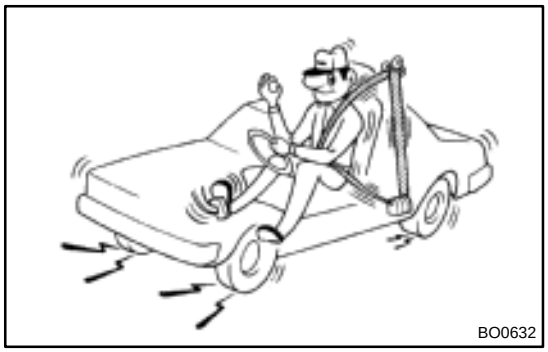
BO0632

(b) Drive the car at 10 mph (16 km/h) and slam on the brakes. Check that the belt locks and cannot be extended at this time.

HINT:

Conduct this test in a safe area. If the belt does not lock, remove the belt mechanism assembly and conduct the following static check. Also, whenever installing a new belt assembly, verify the proper operation before installation.

2. Driver's seat belt (ELR):

STATIC TEST

(a) Make sure that the belt locks when pulled out quickly.

(b) Remove the locking retractor assembly.

(c) Tilt the retractor slowly.

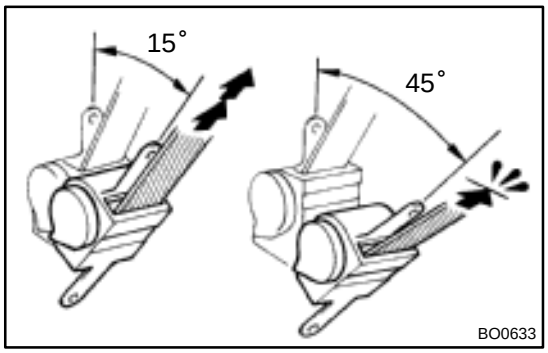

BO0633

(d) Make sure that the belt can be pulled out at a tilt of 15 degrees or less, and cannot be pulled out over 45 degrees of tilt.

If a problem is found, replace the assembly.

3. Except driver's seat belt (ALR/ELR):

STATIC TEST

(a) Make sure that the belt locks when pulled out quickly.

(b) Remove the locking retractor assembly.

(c) Pull out the whole belt and measure the length of the whole belt.

Then retract the belt slightly and pull it out again.

(d) Make sure that the belt cannot be extended further.

If a problem is found, replace the assembly.

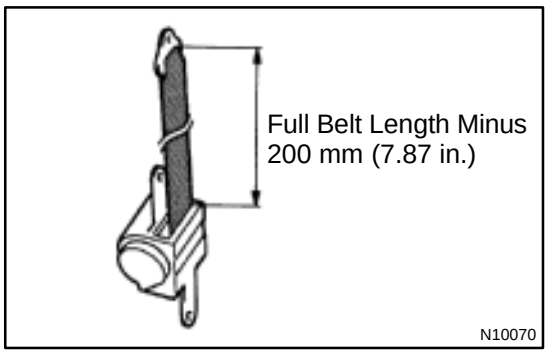

(e) Retract the whole belt, then pull out the belt until 200 mm (7.87 in.)of belt remains retracted.

(f) Tilt the retractor slowly.

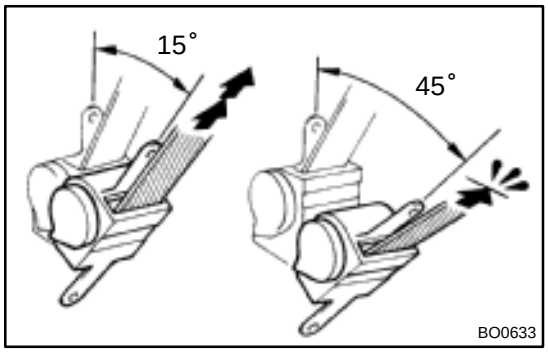

(g) Make sure that the belt can be pulled out at a tilt of 15 degrees or less, and cannot be pulled out at over 45 degrees of tilt.

If a problem is found, replace the assembly.

SRS AIRBAG

BO0VV–04

PRECAUTION

The TOYOTA PASEO is equipped with an SRS (Supplemental Restraint System) such as the driver airbag and front passenger airbag. Failure to carry out service operation in the correct sequence could cause the SRS to unexpectedly deploy during servicing, possibly leading to a serious accident. Before servicing (including removal or installation of parts, inspection or replacement), be sure to read the precautionary notices in the RS section.

WINDSHIELD

COMPONENTS

BO1G5–01

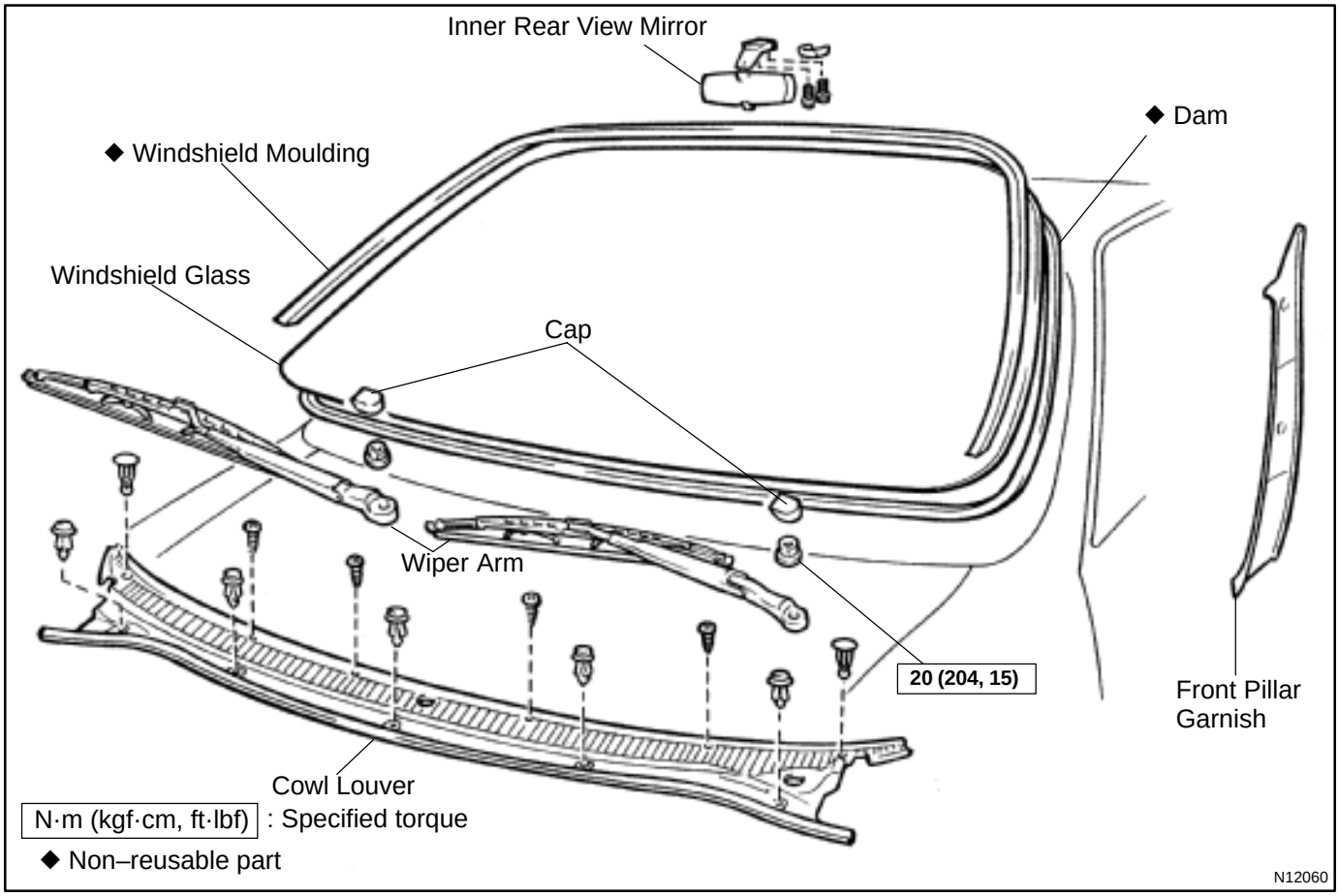

BO1G7–01

INSTALLATION

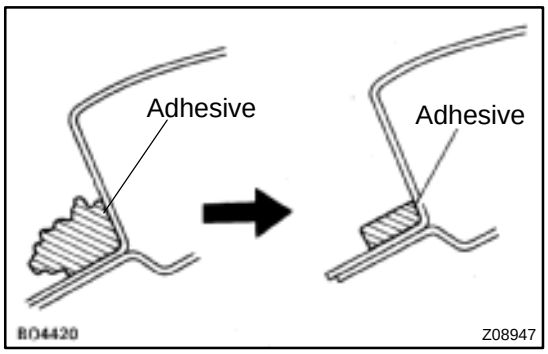

1. CLEAN AND SHAPE CONTACT SURFACE OF BODY

(a) Cut away any rough areas with a knife.

HINT:

Leave as much of the urethane layer on the body as possible.

(b) Clean the cutting surface of the urethane gum with a piece of shop rag saturated in cleaner.

HINT:

Even if all the urethane has been removed, clean the body.

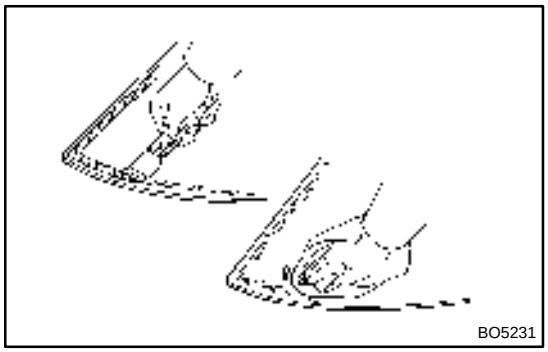

2. CLEAN REMOVED GLASS BEFORE INSTALLATION

(a) Using a scraper, remove the urethane gum that is sticking to the glass.

(b) Clean the glass with cleaner.

NOTICE:

Do not touch the glass after cleaning it.

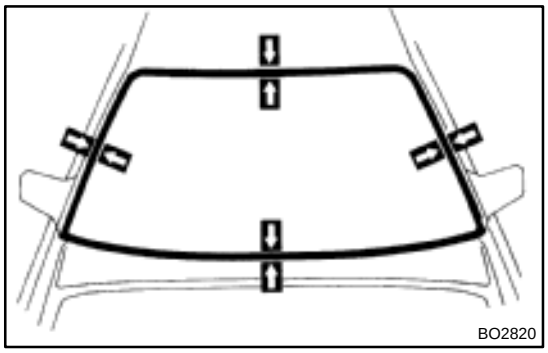

3. POSITION GLASS

(a) Place the glass in the correct position.

(b) Check that all contacting parts of the glass rim are perfectly even.

(c) Place reference marks between the glass and body.

(d) Remove the glass.

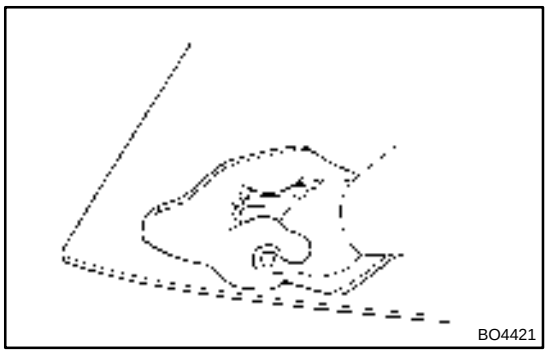

4. CLEAN CONTACT SURFACE GLASS

Using cleaner, clean the contact surface glass on the black–colored area around the entire glass rim.

NOTICE:

Do not touch the glass face after cleaning it.

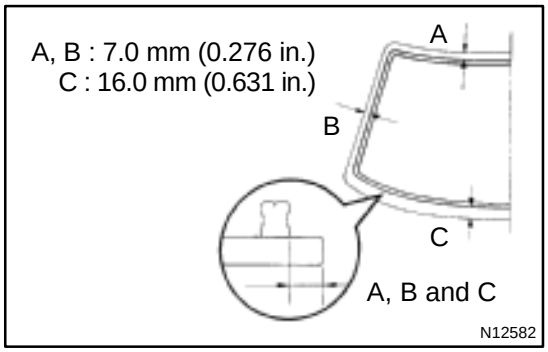

5. INSTALL DAM

Install the dam with double–stick tape as shown in the illustration.

NOTICE:

Do not touch the glass face after cleaning it.

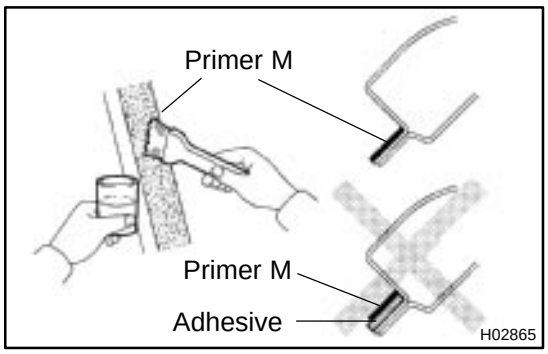

6. COAT CONTACT SURFACE OF BODY WITH PRIMER "M"

Using a brush, coat Primer M to the exposed part of body on the vehicle side.

NOTICE:

- **Let the primer coating dry for 3 minutes or more.**
- **Do not coat Primer M to the adhesive.**
- **Do not keep any of the opened Primer M for later use.**

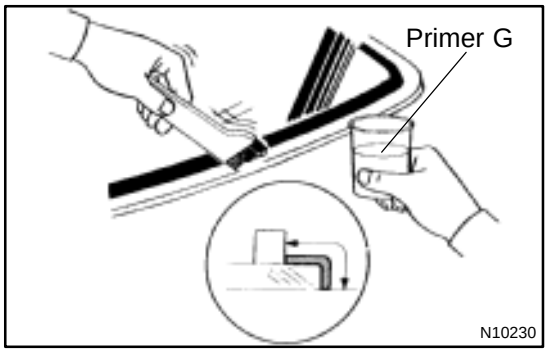

7. COAT CONTACT SURFACE OF GLASS WITH PRIMER "G"

(a) Using a brush or sponge, coat the edge of the glass and the contact surface with Primer G.

(b) When the primer is coated wrongly to the area other than the specified, wipe it off with a clean shop rag before the primer dries.

NOTICE:

Let the primer coating dry for 3 minutes or more. Do not keep any of the opened Primer G for later use.

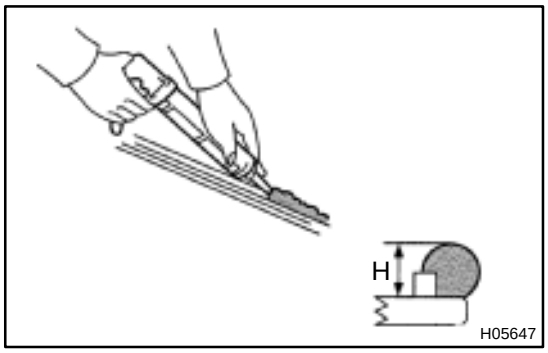

8. APPLY ADHESIVE

(a) Cut off the tip of the cartridge nozzle to make a hole of 5 mm (0.20 in.) in diameter. Fill the cartridge with adhesive.
Part No. 08850–00801 or equivalent

HINT:

After cutting off the tip, use all adhesive within the time described in the table below.

Temperature	Tackfree time
35 ˚C (95 ˚F)	15 minutes
20 ˚C (68 ˚F)	100 minutes
5 ˚C (41 ˚F)	8 hours

(b) Load the cartridge into the sealer gun.

(c) Coat the glass with adhesive on all contact surfaces along the ridge.
Adhesive height:
If adhesive remains on body
3.5 – 5.0 mm (0.138 – 0.197 in.)
If no adhesive remains on body
8 – 10 mm (0.31 – 0.39 in.)

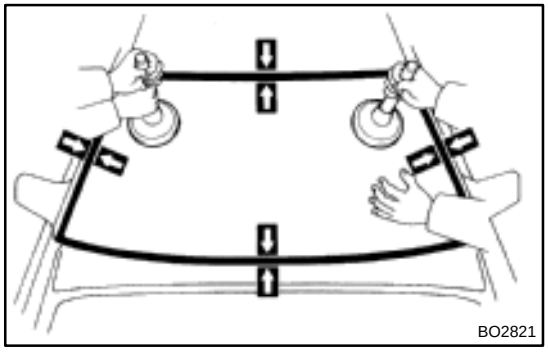

9. INSTALL GLASS

HINT:

Confirm that the dam is attached to the body panel as shown in the illustration.

(a) Position the glass so that the reference marks are lined up, and press in gently along the rim.

(b) Using a spatula, apply adhesive on the glass rim.

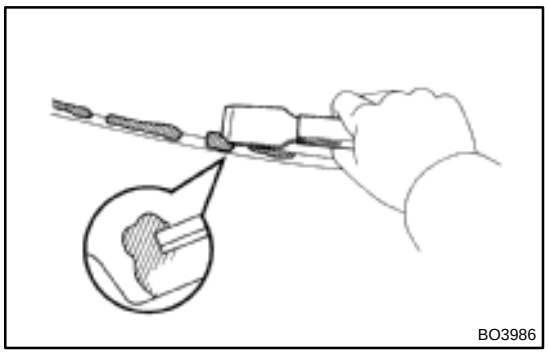
BO3986

(c) Use a scraper to remove any excess or protruding adhesive.

(d) Hold the windshield glass in place securely with a protective tape or equivalent until the adhesive hardenes.

NOTICE:

Take care not to drive the vehicle during the time described in the table below.

Temperature	Minimum time prior to driving the vehicle
35 ˚C (95 ˚F)	1.5 hours
20 ˚C (68 ˚F)	5 hours
5 ˚C (41 ˚F)	24 hours

10. INSPECT FOR LEAKS AND REPAIR

(a) Perform a leak test after the hardening time has elapsed.

(b) Seal any leaks with sealant.

Part No. 08833–00030 or equivalent.

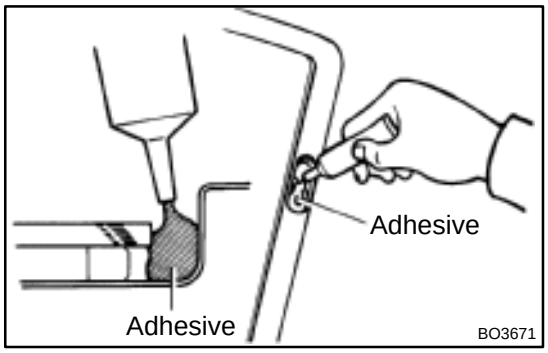

BO3671

11. CUT ADHESIVE AT MOULDING INSTALLATION AREA

Using a knife, cut off the adhesive around the moulding installation area.

12. APPLY ADHESIVE AT MOULDING INSTALLATION AREA

Part No. 08833–00030 or equivalent

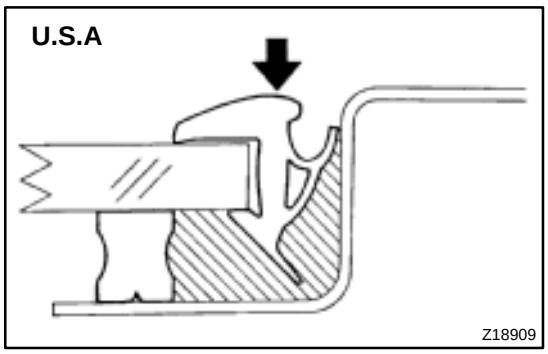

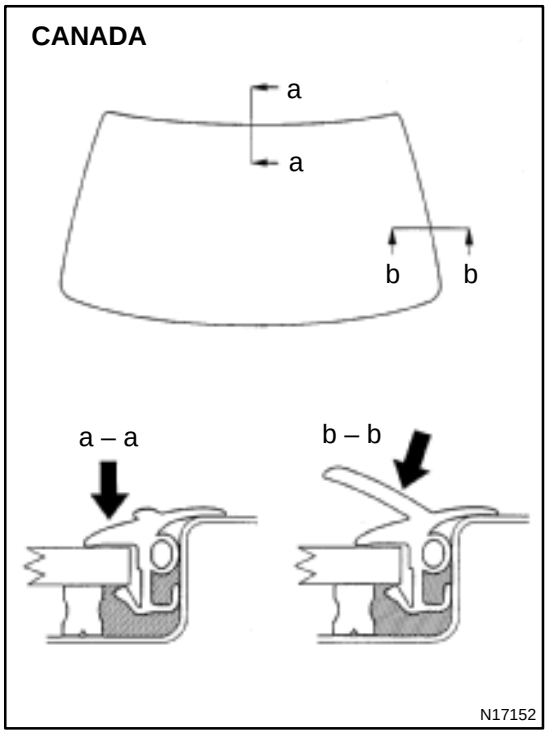

13. INSTALL WINDSHIELD MOULDING

Place the moulding onto the body and tap it by hand.

14. INSTALL THESE PARTS:

(a) Inner rear view mirror
(b) Front pillar garnish
(c) Cowl louver
(d) Wiper arms
Torque: 20 N·m (204 kgf·cm, 15 ft·lbf)

BO1G6–01

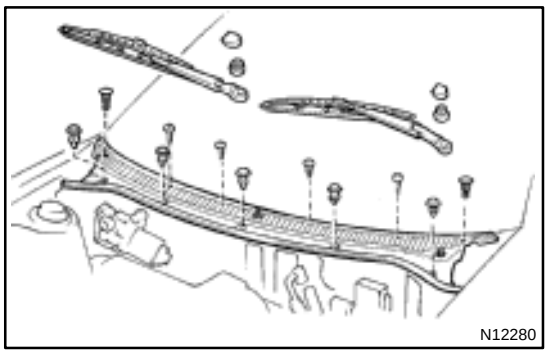

REMOVAL

1. REMOVE WIPER ARM

(a) Remove the 2 caps.

(b) Remove the 2 nuts and 2 wiper arms.

2. REMOVE COWL LOUVER

(a) Remove the 7 clips.

(b) Remove the 4 screws and the cowl louver.

3. REMOVE INNER REAR VIEW MIRROR

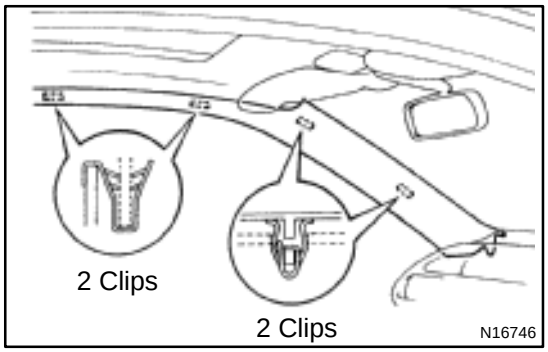

4. REMOVE FRONT PILLAR GARNISH

Remove the garnishes by pulling.

5. REMOVE INNER REAR VIEW MIRROR

Remove the 2 bolts and the inner rear view mirror.

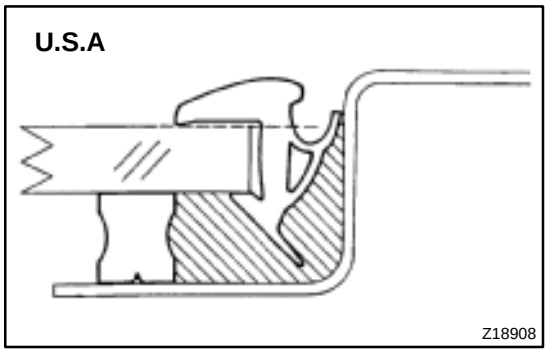

6. REMOVE WINDSHIELD MOULDING

Using a knife, cut off the moulding as shown.

NOTICE:

Do not damage the body with the knife.

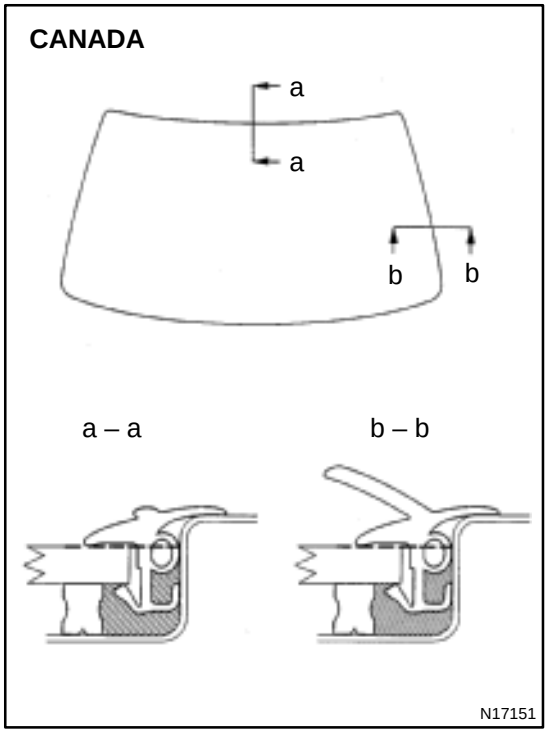

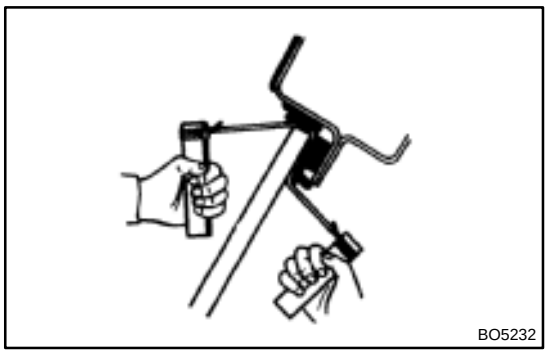
BO5232

7. REMOVE WINDSHIELD GLASS

(a) Push piano wire through between the body and glass from the interior.

(b) Tie both wire ends to wooden blocks or like object.

HINT:

Apply adhesive tape to the outer surface to keep the surface from being scratched.

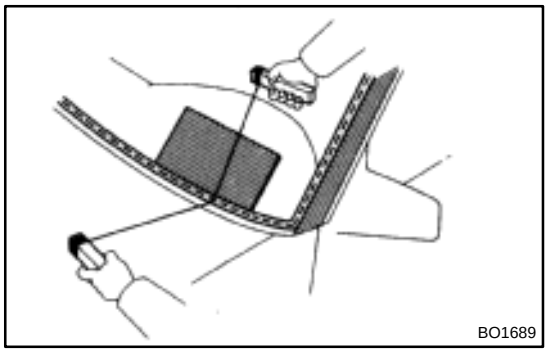
BO1689

NOTICE:

When separating, take care not to damage the paint and interior and exterior ornaments.

To prevent scratching the safety pad when removing the windshield, place a plastic sheet between the piano wire and safety pad.

(c) Cut the adhesive by pulling the piano wire around it.

(d) Remove the glass.

NOTICE:

Leave as much of the urethane layer on the body as possible when cutting off the glass.

BR0SY–03

COMPONENTS

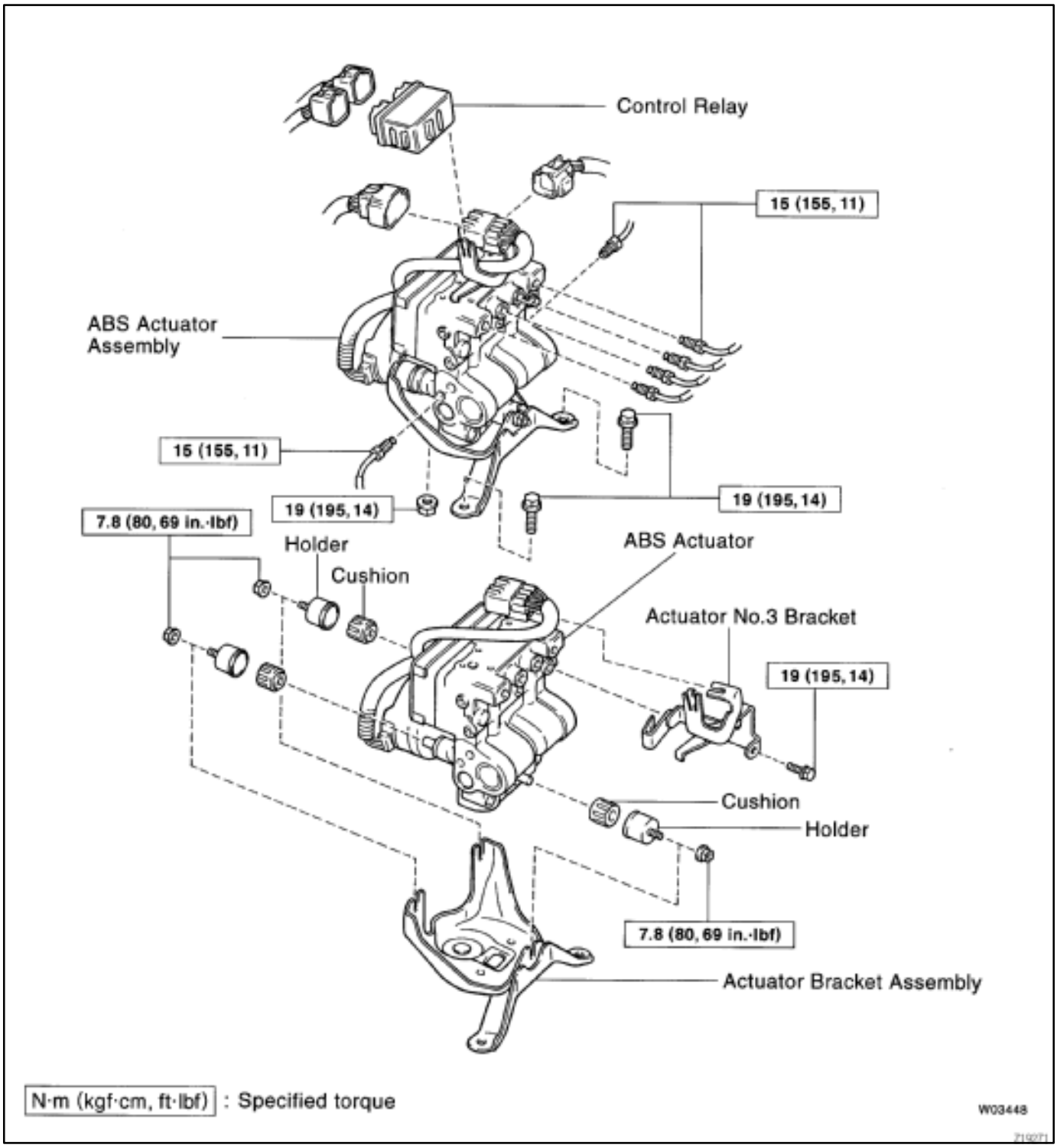

BR0T0–01

INSTALLATION

Installation is in the reverse order of removal (See page BR–40).

AFTER INSTALLATION, FILL BRAKE RESERVOIR WITH BRAKE FLUID, BLEED BRAKE SYSTEM (See page BR–4) AND CHECK FOR LEAKS

ABS ACTUATOR

BR03R–05

ON–VEHICLE INSPECTION

1. INSPECT BATTERY POSITIVE VOLTAGE

Battery positive voltage: 10 – 14V

2. DISCONNECT CONNECTORS

(a) Disconnect the 2 connectors from the control relay.

(b) Disconnect the connector from the actuator.

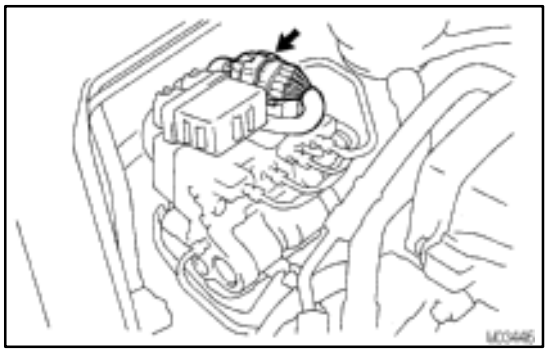

3. CONNECT ACTUATOR CHECKER (SST)

(a) Connect the actuator checker (SST) to the actuator, control relay and body side wire harness through the sub–wire harness C and I (SST), as shown.

SST 09990–00150, 09990–00200, 09990–00300

(b) Connect the red cable of the checker to the battery positive (+) terminal and black cable to the negative (–) terminal. Connect the black cable of the sub–wire harness to the battery negative (–) terminal or body ground.

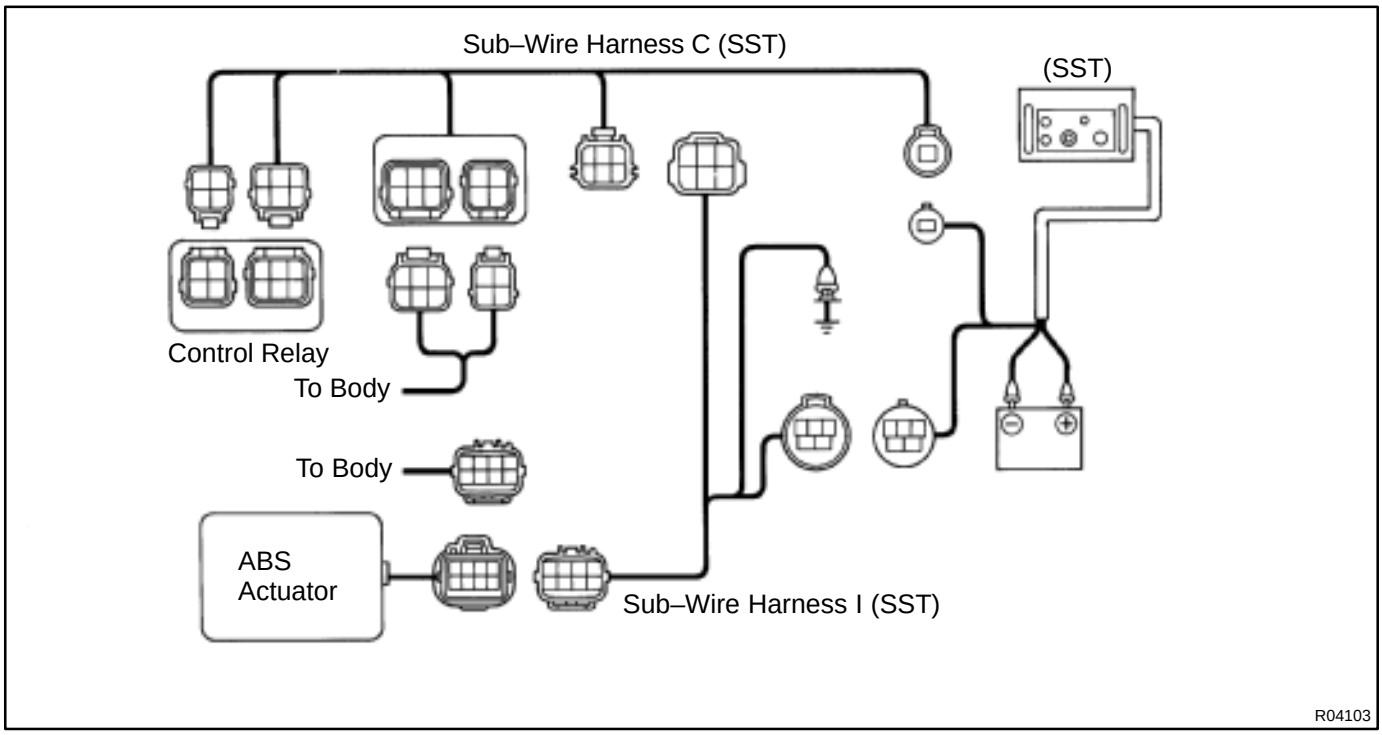

(c) Place the ”SHEET A” (SST) on the actuator checker.
SST 09990–00163

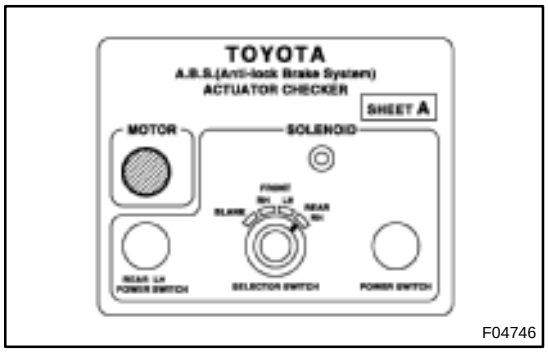

4. INSPECT BRAKE ACTUATOR OPERATION

(a) Start the engine, and run it at idle.

(b) Turn the selector switch of the actuator checker to the ”FRONT RH” position.

(c) Push and hold in the MOTOR switch for a few seconds. Make sure that you can hear the motor run.

(d) Depress the brake pedal and hold it for about 15 seconds, and check the pedal dose not go down.

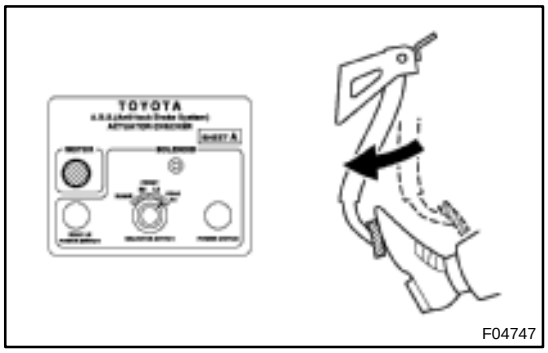

(e) With your foot still applied onto the brake pedal, push the MOTOR switch and check the brake pedal does not pulsate.

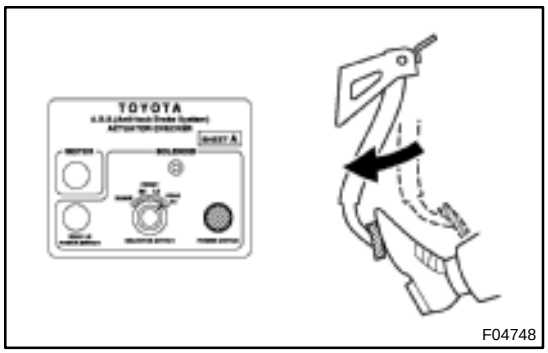

(f) Depress the brake pedal and hold it. As you hold the pedal down, push and hold in the POWER SWITCH for a few seconds. Check the pedal does not go down.

(g) With your foot still applied onto the brake pedal, release the POWER SWITCH and check that the pedal goes down.

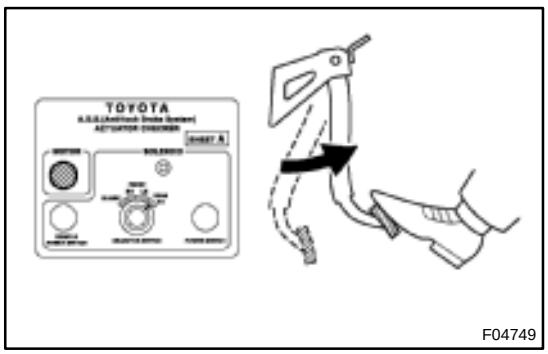

(h) With your foot still applied on the brake pedal, push the MOTOR switch and check the brake pedal returns.

(i) Release the brake pedal.

5. INSPECT FOR OTHER WHEELS

(a) Turn the selector switch to the ”FRONT LH” position.

(b) Repeat (c) – (i) of step 4, check the actuator operation as before.

(c) Similarly, inspect the ”REAR RH” and ”REAR LH” positions.

HINT:When inspecting the ”REAR LH” position, push the REAR LH switch instead of the POWER SWITCH, and you can inspect in any selector switch position.

6. PUSH MOTOR SWITCH

(a) Push and hold in the MOTOR switch for a few seconds.

(b) Stop the engine.

7. DISCONNECT ACTUATOR CHECKER (SST)

Remove the ”SHEET A” (SST) and disconnect the actuator checker (SST) and sub–wire harness (SST) from the actuator, control relay and body side wire harness.

SST 09990–00150, 09990–00163, 09990–00200, 09990–00300

8. CONNECT CONNECTORS

(a) Connect the connector to the actuator.

(b) Connect the 2 connectors to the control relay.

9. CLEAR DTC (See page DI–173)

BR0SZ–03

REMOVAL

1. REMOVE RIGHT FRONT FENDER LINER

2. REMOVE CONTROL RELAY

(a) Disconnect the 2 connectors from the relay.

(b) Remove the relay from the clamp.

3. DISCONNECT BRAKE LINES

Using SST, disconnect the brake lines from the ABS actuator.

SST 09023–00100

Torque: 15 N·m (155 kgf·cm, 11 ft·lbf)

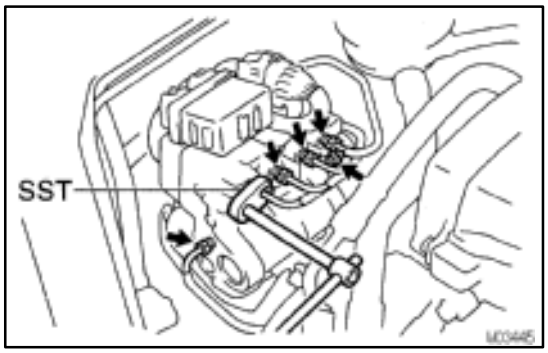

4. REMOVE ABS ACTUATOR ASSEMBLY

(a) Disconnect the 2 connectors.

(b) Remove the 2 blots, nut and ABS actuator assembly.

Torque: 19 N·m (195 kgf·cm, 14 ft·lbf)

5. REMOVE ABS ACTUATOR

(a) Remove the 3 nuts and ABS actuator from actuator bracket.

Torque: 7.8 N·m (80 kgf·cm, 69 in.·lbf)

(b) Remove the 3 holders and cushions from the ABS actuator.

BR0SN–01

COMPONENTS

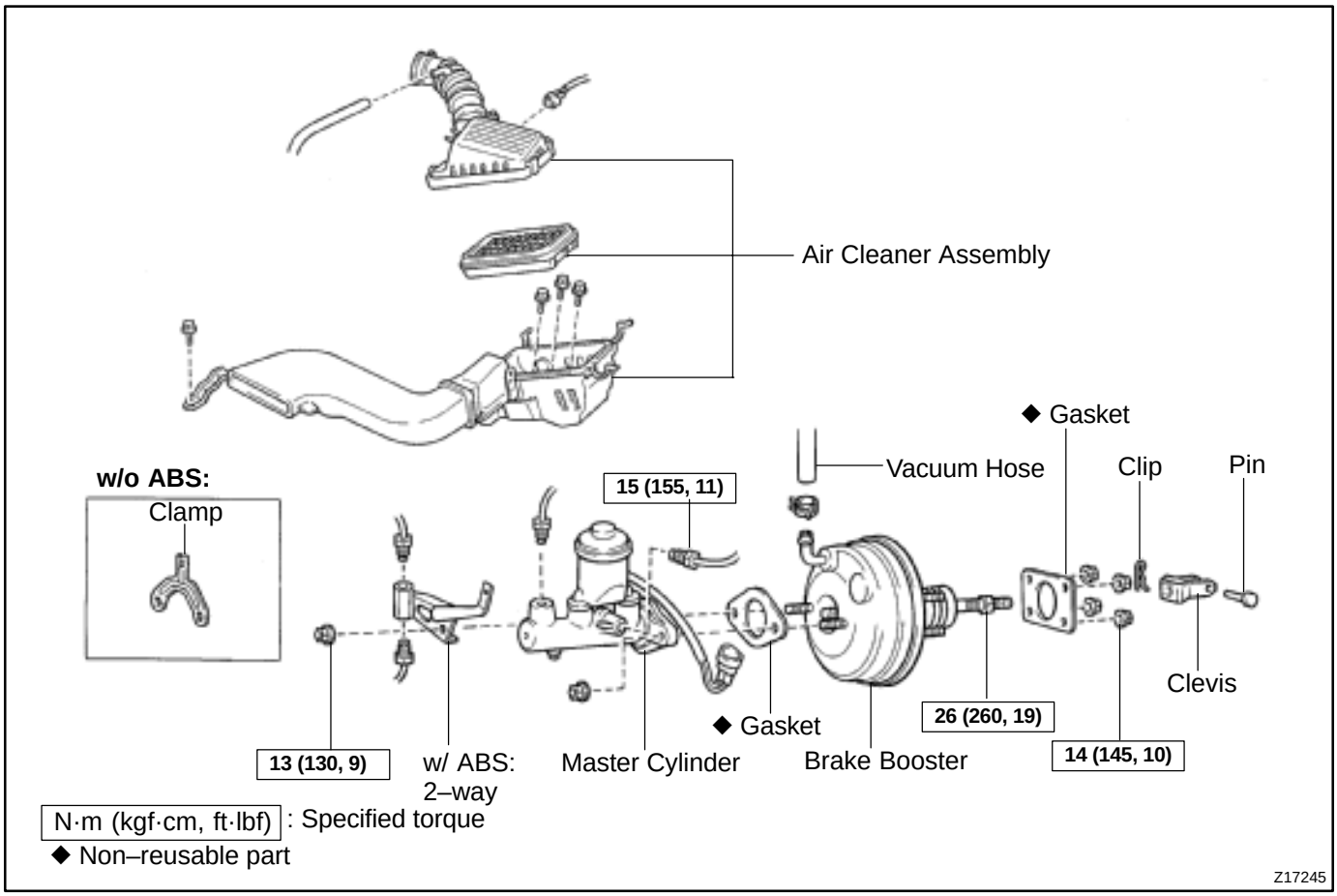

BR0SP–02

INSTALLATION

1. INSTALL BRAKE BOOSTER

(a) Install the booster and a new gasket.

(b) Install the clevis to the operating rod.

(c) Install and torque the 4 booster installation nuts.
Torque: 14 N·m (145 kgf·cm, 10 ft·lbf)

(d) Install the clevis, and torque the lock nut.
Torque: 25 N·m (260 kgf·cm, 10 ft·lbf)

(e) Install the clevis pin into the clevis and brake pedal, and install the clip to the clevis pin.

(f) Install the pedal return spring.

(g) Install the No.1 brake line clamp to the body.

(h) Install the No.2 brake line clamp to the body.

2. ADJUST LENGTH OF BOOSTER PUSH ROD

(a) Install a new gasket on the master cylinder.

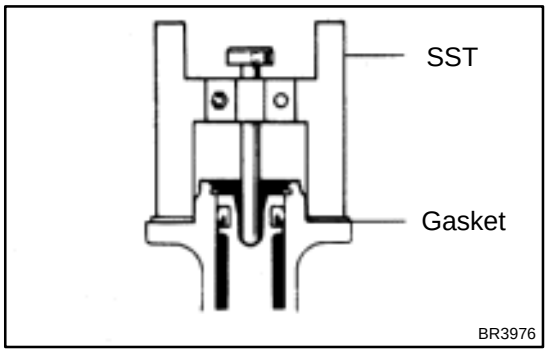

(b) Set the SST on the gasket, and lower the pin until its tip slightly touches the piston.
SST 09737–00010

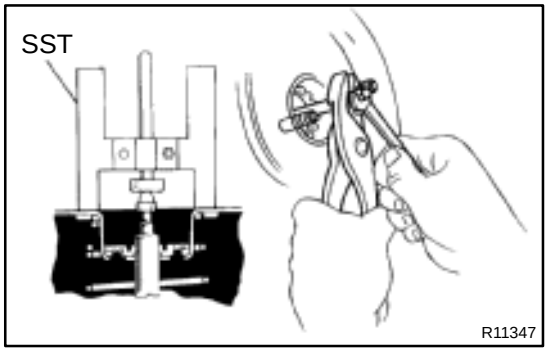

(c) Turn the SST upside down, and set it on the booster.
SST 09737–00010

(d) Measure the clearance between the booster push rod and pin head (SST).
Clearance: 0 mm (0 in.)

(e) Adjust the booster push rod length until the push rod lightly touches the pin head.

3. INSTALL MASTER CYLINDER (See page BR–14)

4. CONNECT VACUUM HOSE TO BRAKE BOOSTER

5. FILL BRAKE RESERVOIR WITH BRAKE FLUID AND BLEED BRAKE SYSTEM (See page BR–4)

6. CHECK FOR FLUID LEAKAGE

7. CHECK AND ADJUST BRAKE PEDAL (See page BR–5)

Check and adjust the brake pedal, then tighten the clevis lock nut.

Torque: 26 N·m (260 kgf·cm, 19 ft·lbf)

8. DO OPERATIONAL CHECK (See page BR–15)

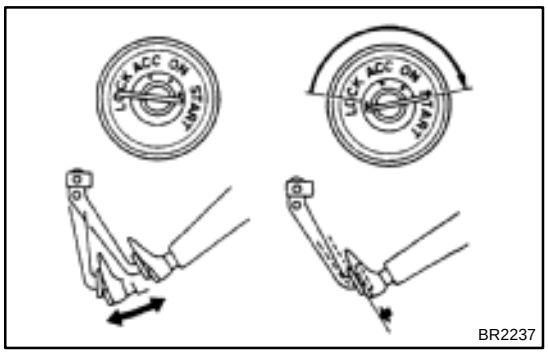

BRAKE BOOSTER ASSEMBLY

BR0SM–02

ON–VEHICLE INSPECTION

1. OPERATING CHECK

(a) Depress the brake pedal several times with the engine OFF and check that there is no change in the pedal reserve distance.

(b) Depress the brake pedal and start the engine. If the pedal goes down slightly, operation is normal.

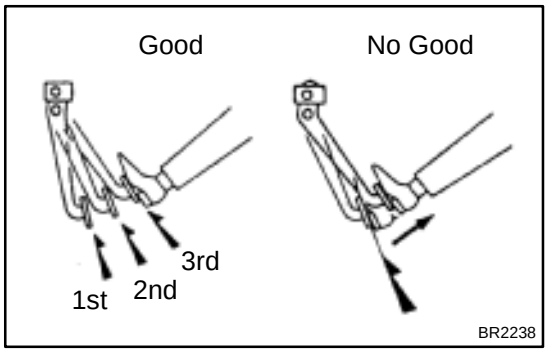

2. AIR TIGHTNESS CHECK

(a) Start the engine and stop it after 1 or 2 minutes. Depress the brake pedal several times slowly.

If the pedal goes down farthest the 1st time, but gradually rises after the 2nd or 3rd time, the booster is air–tight.

(b) Depress the brake pedal while the engine is running, and stop the engine with the pedal depressed.

If there is no change in the pedal reserve travel after holding the pedal for 30 seconds, the booster is air–tight.

BR0SO–01

REMOVAL

1. REMOVE MASTER CYLINDER (See page BR–10)

2. DISCONNECT VACUUM HOSE FROM BRAKE BOOSTER

3. REMOVE PEDAL RETURN SPRING

4. REMOVE CLIP AND CLEVIS PIN

5. REMOVE BRAKE BOOSTER, GASKET AND CLEVIS

(a) Remove the No.1 brake line clamp.

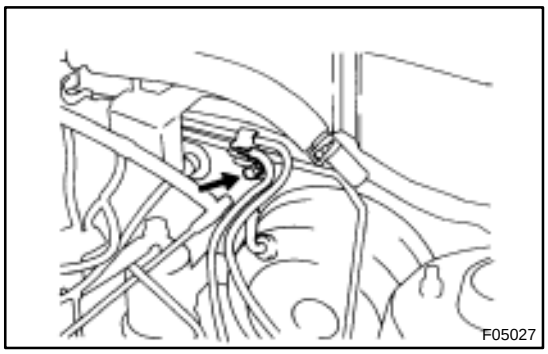
F05027

(b) Remove the No.2 brake line clamp.

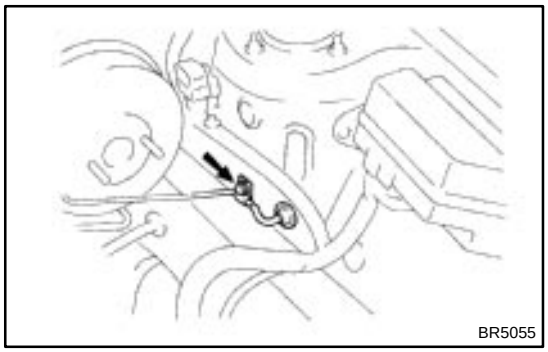
BR5055

(c) Remove 4 nuts and clevis.

(d) Pull out the brake booster and gasket.

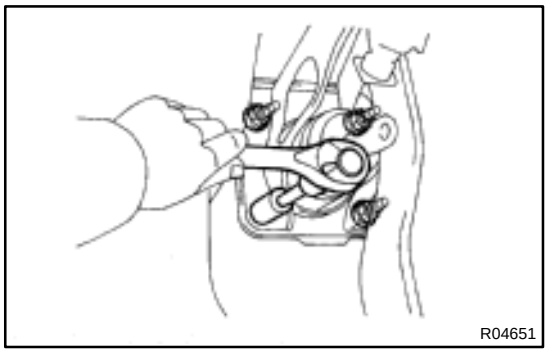
R04651

BRAKE MASTER CYLINDER

COMPONENTS

BR0SG–02

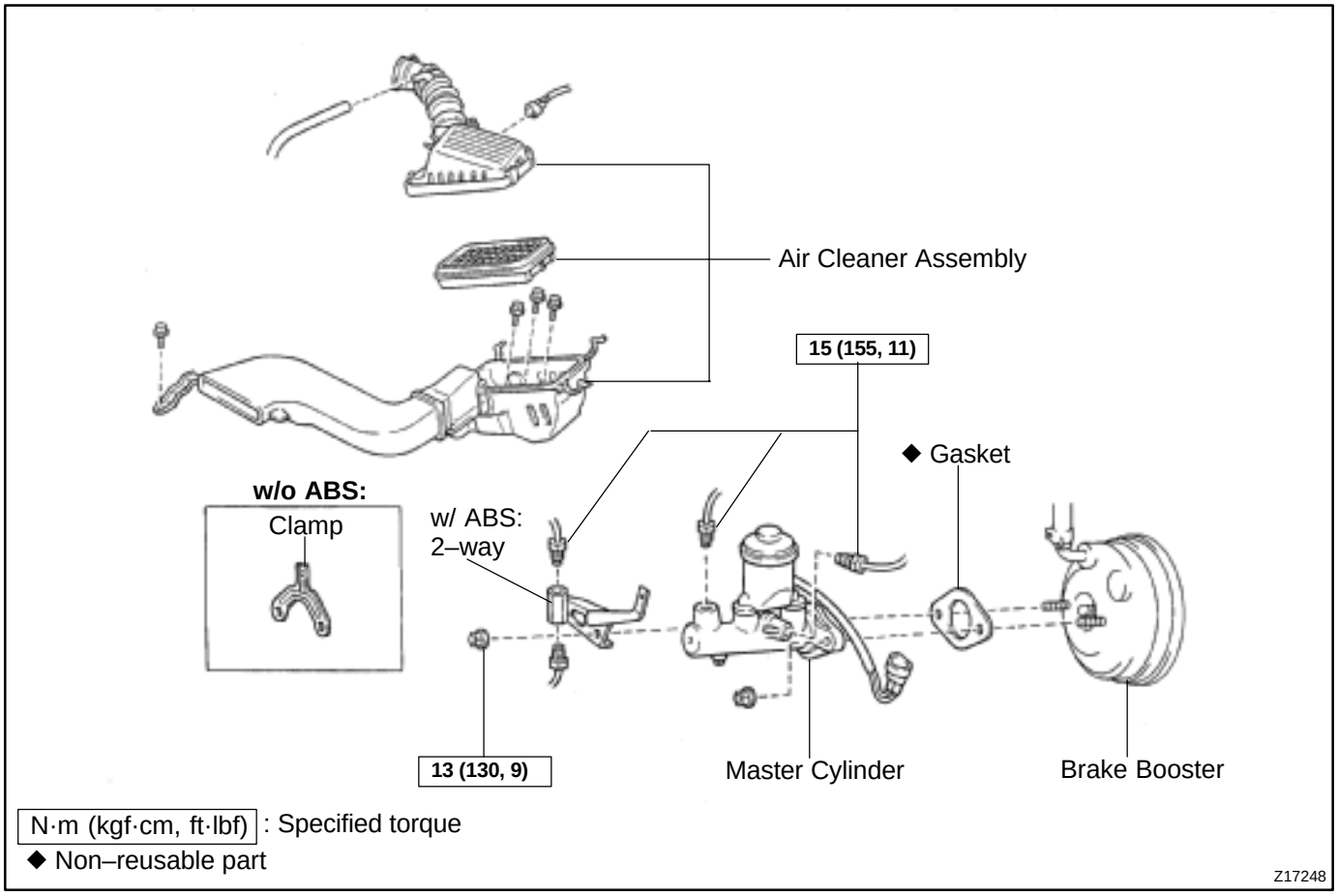

N·m (kgf·cm, ft·lbf) : Specified torque

◆ Non–reusable part

Z17248

w/o ABS

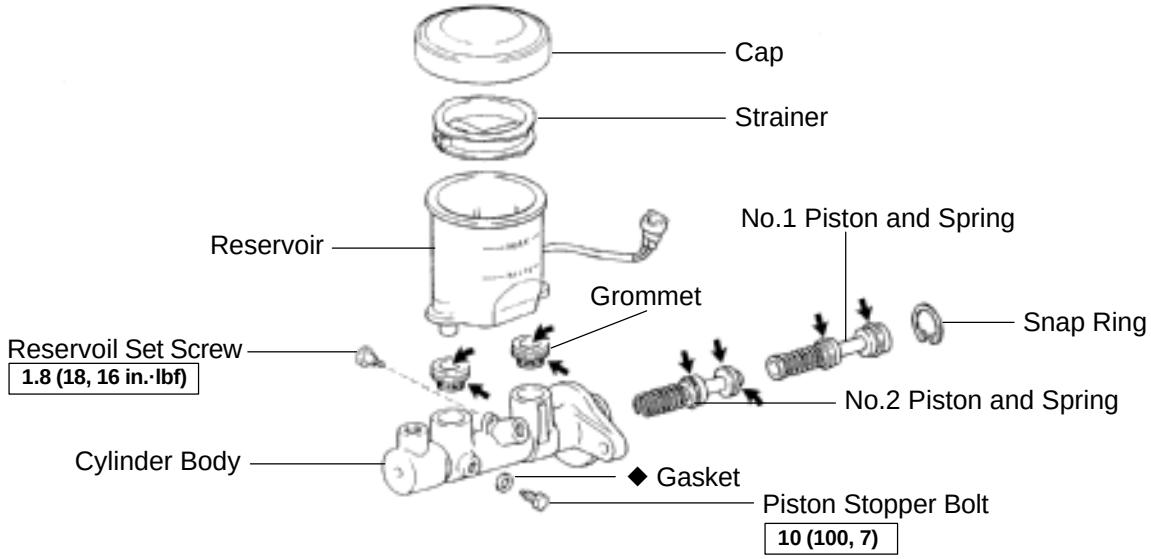

w/ ABS

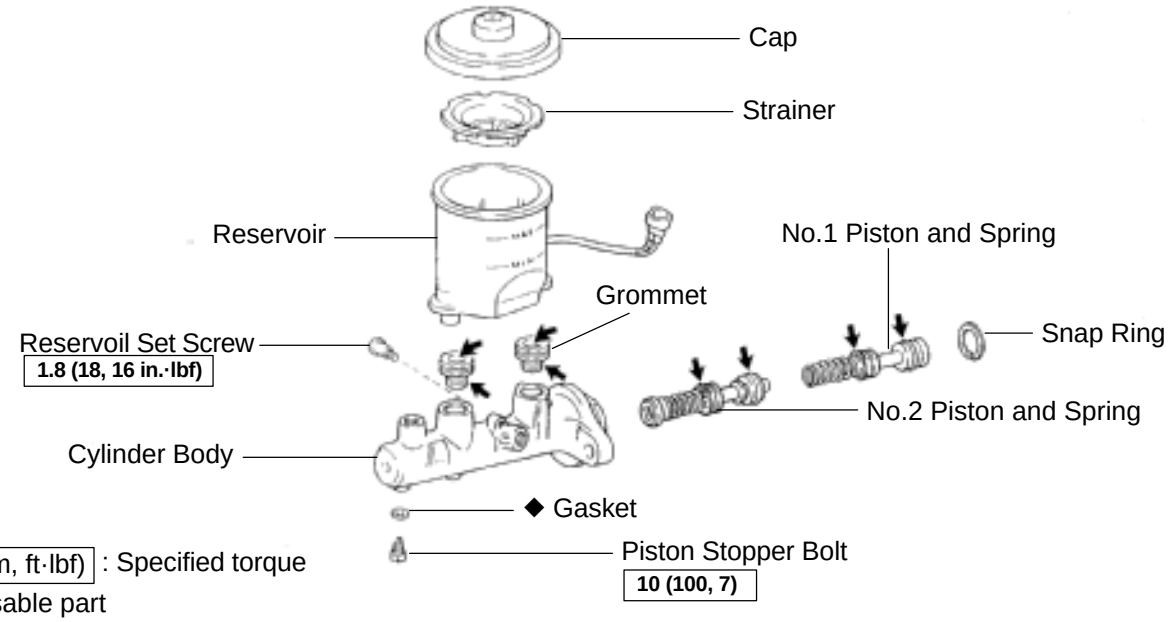

N·m (kgf·cm, ft·lbf) : Specified torque
◆ Non–reusable part
➡ Lithium soap base glycol grease

Z17247

BR0SI–02

DISASSEMBLY

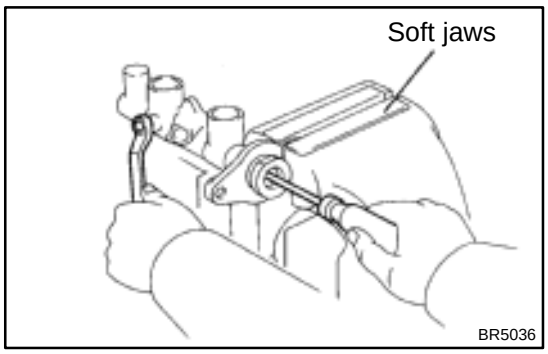

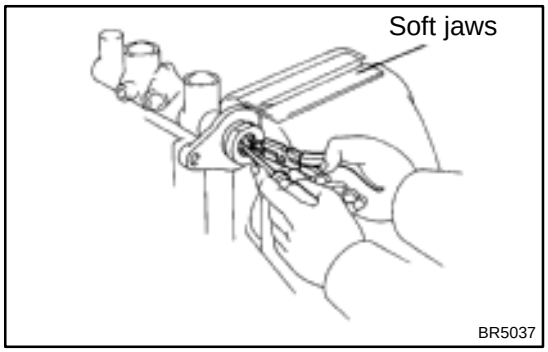

1. REMOVE RESERVOIR

(a) Remove the set screw and pull out the reservoir.
Torque: 1.8 N·m (18 kgf·cm, 16 in.·lbf)

(b) Remove the cap and strainer from the reservoir.

2. REMOVE 2 GROMMETS

3. PLACE CYLINDER IN VISE

4. REMOVE PISTON STOPPER BOLT

Using a screwdriver, push the pistons in all the way and remove the piston stopper bolt and gasket.

HINT:

Tape the screwdriver tip before use.

Torque: 10 N·m (100 kgf·cm, 7 ft·lbf)

5. REMOVE 2 PISTONS AND SPRINGS

(a) Push in the piston with a screwdriver and remove the snap ring with snap ring pliers.

HINT:

Tape the screwdriver tip before use.

(b) Remove the No.1 piston and spring by hand, pulling straight out, not at an angle.

NOTICE:

- **If pulled out and installed at an angle, there is a possibility that the cylinder bore could be damaged.**

HINT:

At the time of reassembly, please refer to the following item.

Be careful not to damage the rubber lips on the pistons.

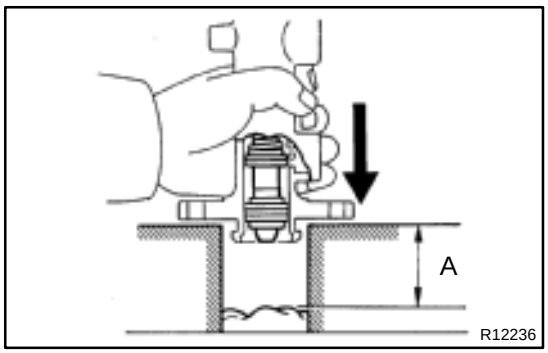

(c) Place a rag and 2 wooden blocks on the work table, and lightly tap the cylinder flange against the block edges until the No.2 piston drops out of the cylinder.

HINT:

Make sure that the distance (A) from the rag to the top of the blocks is at least 100 mm (3.94 in.).

BR0SJ–01

INSPECTION

HINT:

Clean the disassembled parts with compressed air.

1. INSPECT CYLINDER BORE FOR RUST OR SCORING

2. INSPECT CYLINDER FOR WEAR OR DAMAGE

If necessary, clean or replace the cylinder.

BR0SL–02

INSTALLATION

Installation is in the reverse order of removal (See Page BR–10).

1. **BEFORE INSTALLATION, ADJUST LENGTH OF BRAKE BOOSTER PUSH ROD (See page BR–18)**
2. **AFTER INSTALLATION, FILL BRAKE RESERVOIR WITH BRAKE FLUID, BLEED BRAKE SYSTEM (See page BR–4) AND CHECK FOR LEAKS.**
3. **CHECK AND ADJUST BRAKE PEDAL (See page BR–5)**

BR0SK–02

REASSEMBLY

Reassembly is in the reverse order of disassembly (See page BR–11).

NOTICE:

Apply lithium soap base glycol grease to the rubber parts indicated by the arrows (See page BR–8).

BR0SH–01

REMOVAL

1. REMOVE AIR CLEANER ASSEMBLY

2. DISCONNECT LEVEL WARNING SWITCH CONNECTOR

3. DRAW OUT FLUID WITH SYRINGE

NOTICE:

Do not let brake fluid remain on a painted surface. Wash it off immediately.

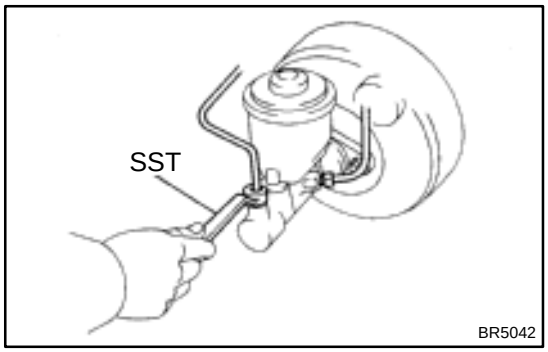

4. DISCONNECT BRAKE LINES

Using SST, disconnect the brake lines from the master cylinder.

SST 09751–36011

Torque: 15 N·m (155 kgf·cm, 11 ft·lbf)

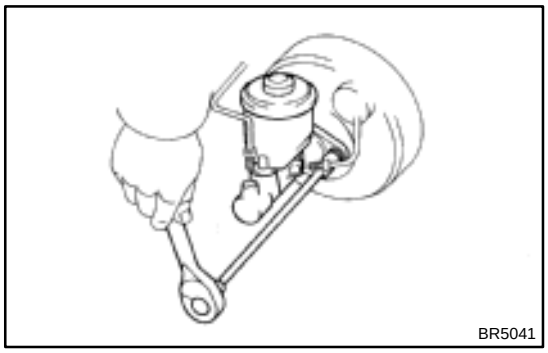

5. REMOVE MASTER CYLINDER

(a) w/o ABS:

Remove the 2 nuts, and pull out the clamp, master cylinder and gasket.

Torque: 13 N·m (130 kgf·cm, 9 ft·lbf)

(b) w/ ABS:

Remove the 2 nuts, and pull out the 2–way, master cylinder and gasket.

Torque: 13 N·m (130 kgf·cm, 9 ft·lbf)

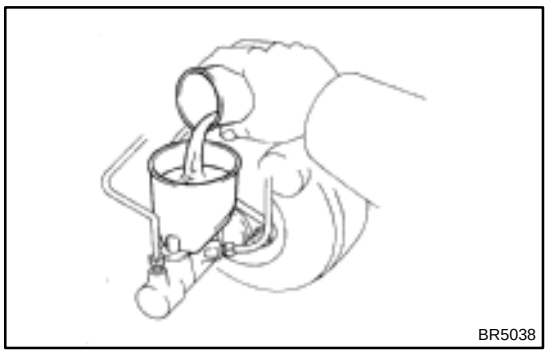
BR5038

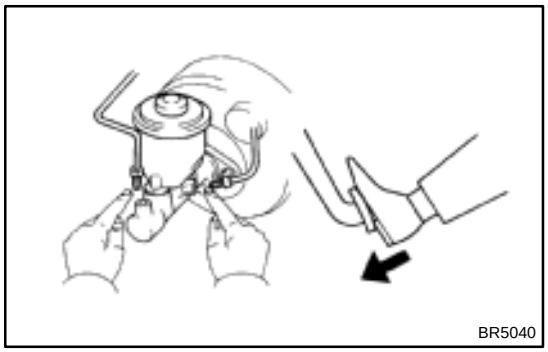
BR5040

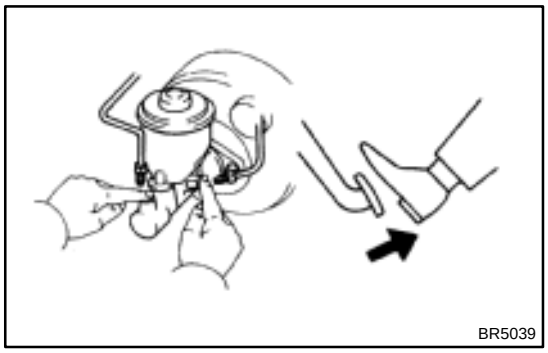
BR5039

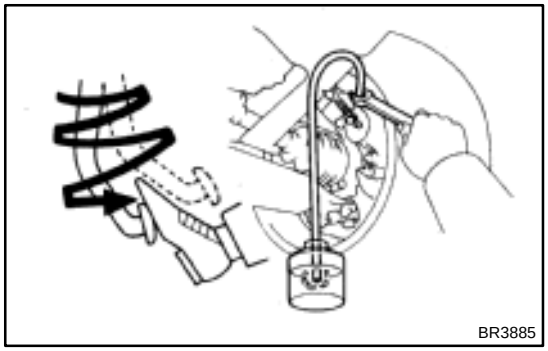
BR3885

BRAKE FLUID

BR0SD–02

BLEEDING

HINT:

If any work is done on the brake system or if air is suspected in the brake lines, bleed the system of air.

NOTICE:

Do not let brake fluid remain on a painted surface. Wash it off immediately.

1. FILL BRAKE RESERVOIR WITH BRAKE FLUID

Check the fluid level in the reservoir after bleeding each wheel. Add fluid, if necessary.

Fluid: SAEJ1703 or FMVSS No.116 DOT 3

2. BLEED MASTER CYLINDER

HINT:

If the master cylinder has been disassembled or if the reservoir becomes empty, bleed the air from the master cylinder.

(a) Disconnect the 2 brake lines from the master cylinder.

(b) Slowly depress the brake pedal and hold it.

(c) Block off the outlet plugs with your fingers, and release the brake pedal.

(d) Repeat (b) and (c) 3 or 4 times.

(e) Connect the 2 brake lines to the master cylinder.

Torque: 15 N·m (155 kgf·cm, 11 ft·lbf)

3. BLEED BRAKE LINE

(a) Connect the vinyl tube to the brake caliper or wheel cylinder.

(b) Depress the brake pedal several times, then loosen the bleeder plug with the pedal held down.

(c) At the point when fluid stops coming out, tighten the bleeder plug, then release the brake pedal.

(d) Repeat (b) and (c) until all the air in the fluid has been bled out.

(e) Repeat the above procedure to bleed the air out of the brake line for each wheel.

Torque: 11 N·m (110 kgf·cm, 8 ft·lbf)

4. CHECK FLUID LEVEL IN RESERVOIR

Check the fluid level in the reservoir after bleeding each wheel. Add fluid, if necessary.

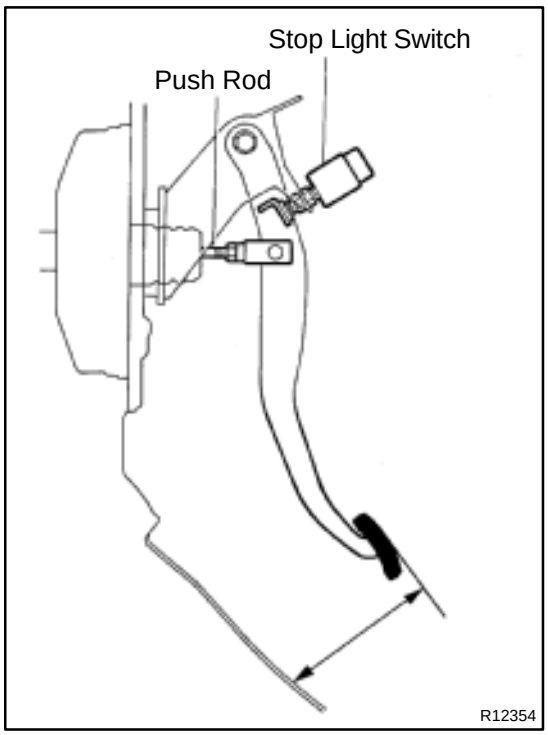

BRAKE PEDAL

BR0SE–02

ON–VEHICLE INSPECTION

1. CHECK PEDAL HEIGHT

Pedal height from asphalt sheet:
138.5 – 148.5 mm (5.453 – 5.846 in.)

2. IF NECESSARY, ADJUST PEDAL HEIGHT

(a) Disconnect the connector from the stop light switch.
(b) Loosen the stop light switch lock nut and remove the stop light switch.
(c) Loosen the push rod lock nut.
(d) Adjust the pedal height by turning the pedal push rod.
(e) Tighten the push rod lock nut.
Torque: 25 N·m (260 kgf·cm, 19 ft·lbf)
(f) Install the stop light switch.
(g) Push in the brake pedal 5 – 15 mm (0.20 – 0.59 in.), turn the stop light switch to lock the nut in the position where the stop light goes off.
(h) Connect the connector to the stop light switch.
(i) After installation, push in the brake pedal 5 – 15 mm (0.20 – 0.59 in.), check that stop light lights up.
(j) After adjusting the pedal height, check the pedal freeplay.

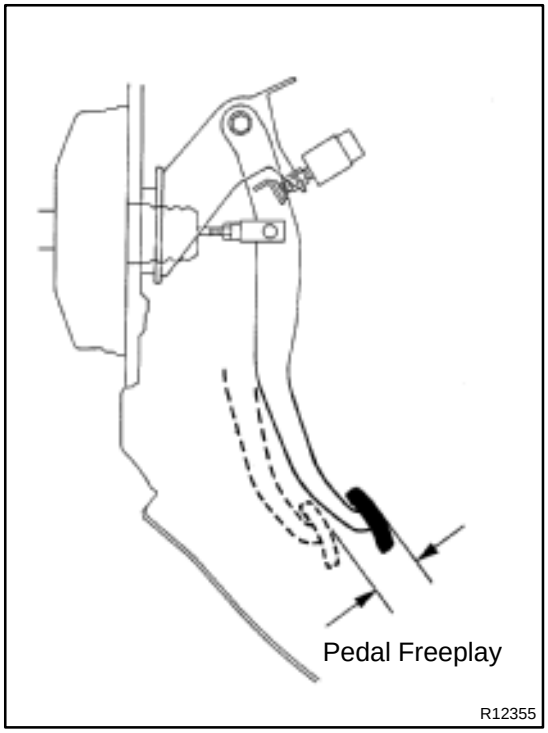

3. CHECK PEDAL FREEPLAY

(a) Stop the engine and depress the brake pedal several times until there is no more vacuum left in the booster.
(b) Push in the pedal by hand until the resistance begins to be felt, then measure the distance.
Pedal freeplay: 1 – 6 mm (0.04 – 0.24 in.)

HINT:
The freeplay to the 1st resistance is due to the play between the clevis and pin. This is magnified up to 1 – 6 mm (0.04 – 0.24 in.) at the pedal.
If incorrect, check the stop light switch clearance.
If the clearance is OK, then troubleshoot the brake system.

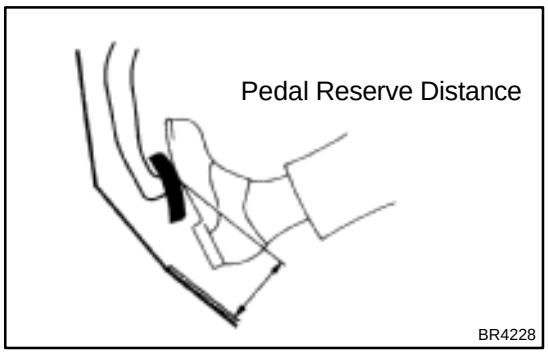

4. CHECK PEDAL RESERVE DISTANCE

Release the parking brake.

With the engine running, depress the pedal and measure the pedal reserve distance, as shown.

Pedal reserve distance from asphalt sheet at 490 N (50 kgf, 110.2 lbf):

w/o ABS More than 60 mm (2.36 in.)

w/ ABS More than 55 mm (2.17 in.)

If the reserve distance is incorrect, troubleshoot the brake system.

BRAKE SYSTEM

BR0SB–01

PRECAUTION

1. **Care must be taken to replace each part properly as it could affect the performance of the brake system and result in a driving hazard. Replace the parts with parts of the same part number or equivalent.**
2. **It is very important to keep parts and the area clean when repairing the brake system.**
3. **If the vehicle is equipped with a mobile communication system, refer to the precautions in the IN section.**

FRONT BRAKE CALIPER

COMPONENTS

BR0SS–01

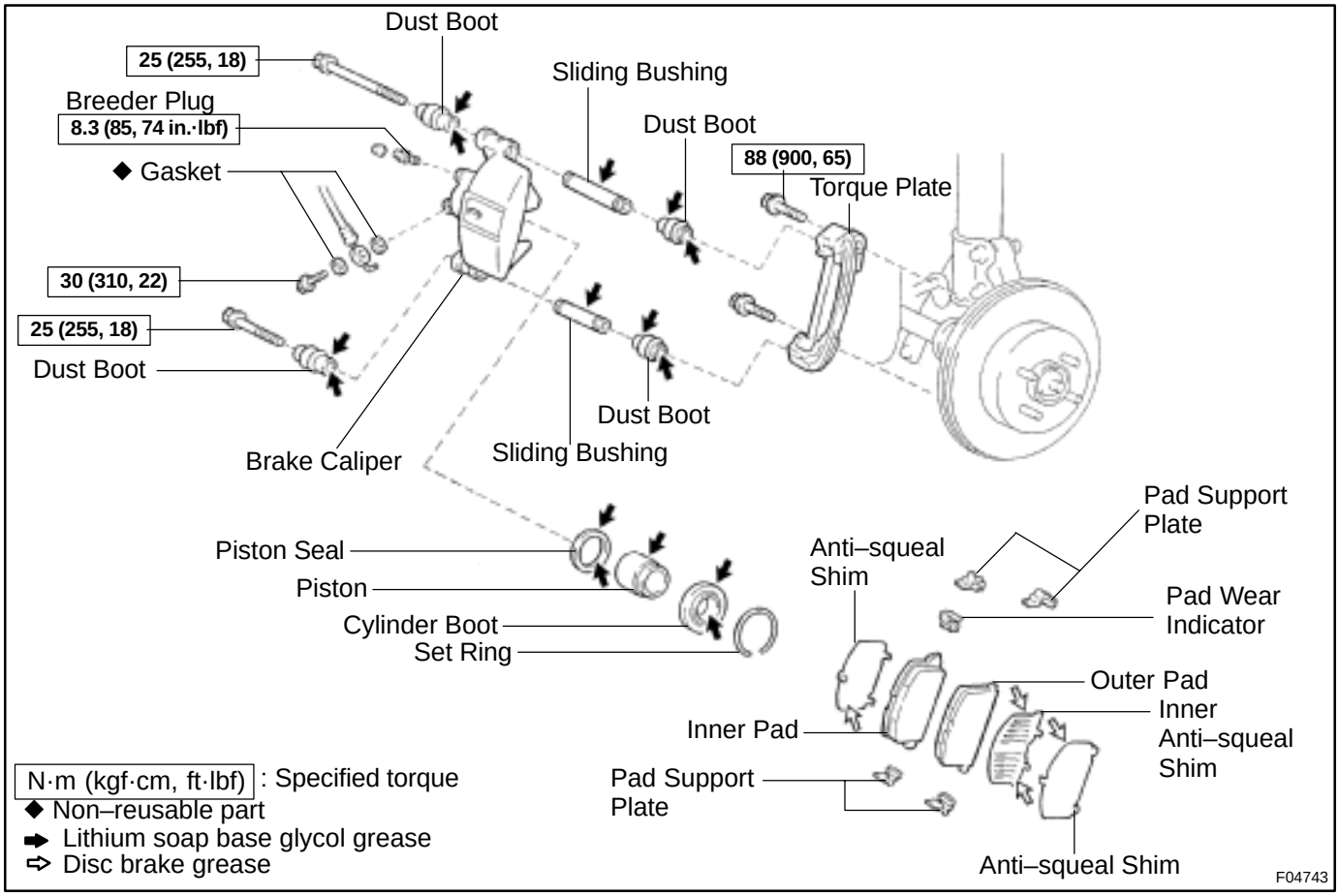

BR0SU–01

DISASSEMBLY

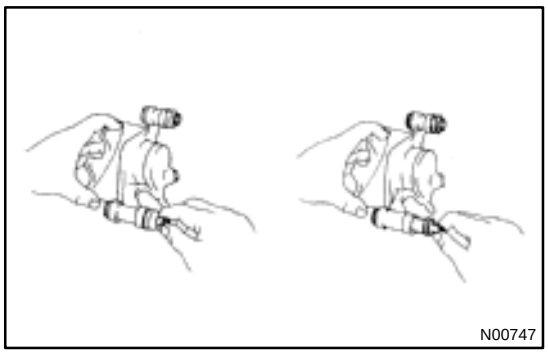

1. REMOVE 2 SLIDING BUSHINGS

2. REMOVE 4 DUST BOOTS

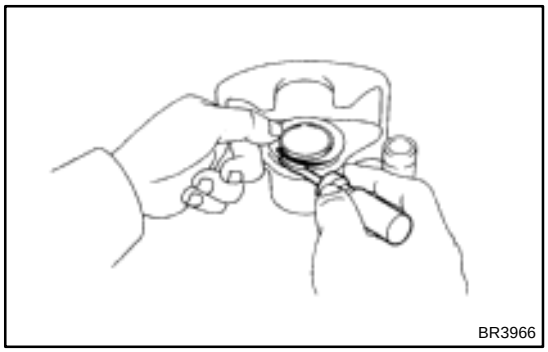

3. REMOVE SET RING AND CYLINDER BOOT

Using a screwdriver, remove the set ring and cylinder boot from the caliper.

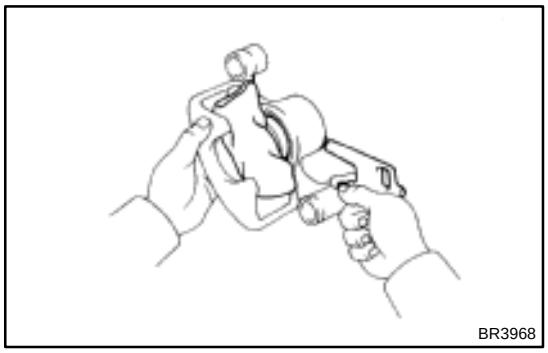

4. REMOVE PISTON

(a) Place a piece of cloth or similar between the piston and the caliper.

(b) Use compressed air to remove the piston from the cylinder.

CAUTION:

Do not place your fingers in front of the piston when using compressed air.

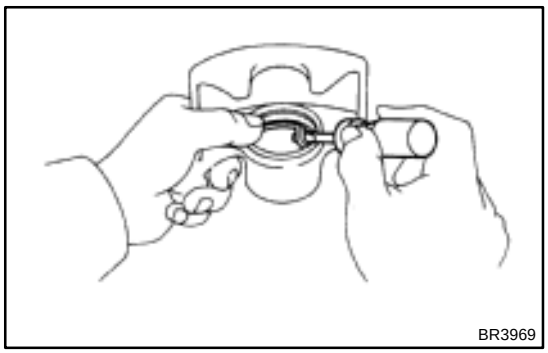

5. REMOVE PISTON SEAL

Using a screwdriver, remove the piston seal from the cylinder.

BR0SV–01

INSPECTION

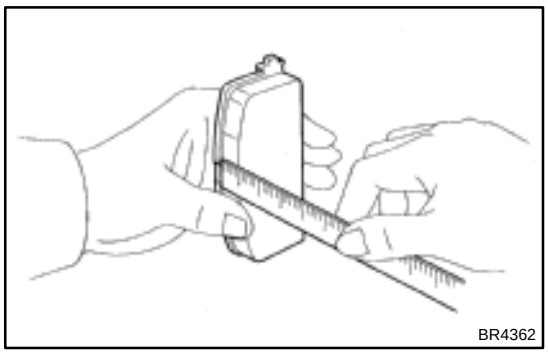
BR4362

1. MEASURE PAD LINING THICKNESS

Using a ruler, measure the pad lining thickness.

Standard thickness: 10.0 mm (0.394 in.)

Minimum thickness: 1.0 mm (0.039 in.)

Replace the pad if the pad's thickness is at the minimum thickness or less, or if the pad has severe and uneven wear.

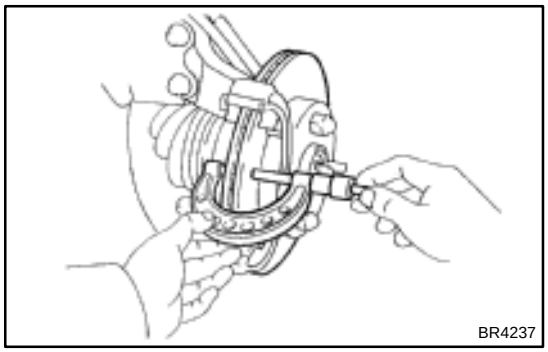
BR4237

2. MEASURE DISC THICKNESS

Using a micrometer, measure the disc thickness.

Standard thickness: 18.0 mm (0.709 in.)

Minimum thickness: 16.0 mm (0.630 in.)

Replace the disc if the disc's thickness is at the minimum thickness or less. Replace the disc or grind it on a lathe if it is badly scored or worn unevenly.

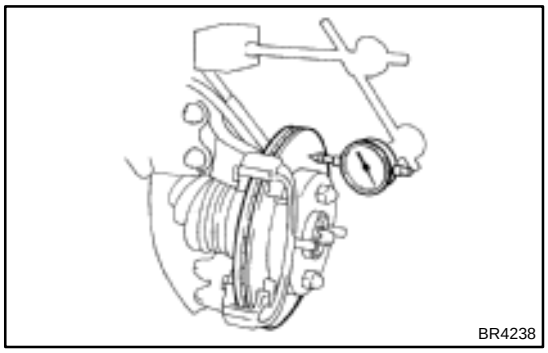
BR4238

3. MEASURE DISC RUNOUT

Using a dial indicator, measure disc runout at 10 mm (0.39 in.) from the outer edge of the disc.

Maximum disc runout: 0.05 mm (0.0020 in.)

If the disc's runout is maximum value or greater, check the bearing play is in the axial direction and check the axle hub runout (See page SA–9). If the bearing play and axle hub runout are not abnormal, adjust the disc runout or grind it on a "On–Car" brake lathe.

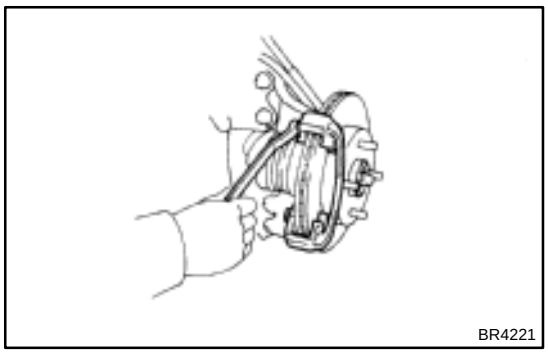
BR4221

4. IF NECESSARY, ADJUST DISC RUNOUT

(a) Remove the torque plate from the knuckle.

(b) Remove the hub nuts and the disc. Reinstall the disc rotating 1/4 of a turn from its original position on the hub. Install and torque the hub nuts.

Torque: 103 N·m (1,050 kgf·cm, 76 ft·lbf)

(c) Remeasure the disc runout. Make a note of the runout and the disc's position on the hub.

(d) Repeat (b) and (c) until the disc has been installed on the 2 remaining hub positions.

- If the minimum runout recorded in (b) to (d) is less than 0.05 mm (0.0020 in.), install the disc in that position.
- If the minimum runout recorded in (b) to (d) is greater than 0.05 mm (0.0020 in.), replace the disc and repeat step 3.

(e) Install the torque plate and torque the mounting bolts.

Torque: 88 N·m (900 kgf·cm, 65 ft·lbf)

BR0DW–04

INSTALLATION

Installation is in the reverse order of removal (See page BR–23).

AFTER INSTALLATION, FILL BRAKE RESERVOIR WITH BRAKE FLUID, BLEED BRAKE SYSTEM (See page BR–4), AND CHECK FOR LEAKS

BR0SW–02

REASSEMBLY

Reassembly is in the reverse order of disassembly (See page BR–24).

NOTICE:

Apply lithium soap base glycol grease to the parts indicated by arrows (See page BR–22).

BR0ST–02

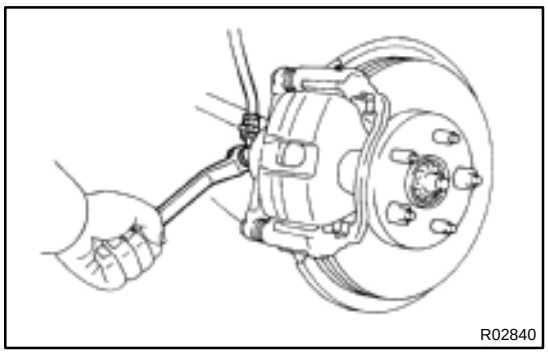
R02840

REMOVAL

1. REMOVE FRONT WHEEL

2. DISCONNECT FLEXIBLE HOSE

(a) Remove the union bolt and 2 gaskets from the caliper, then disconnect the flexible hose from the caliper.
Torque: 30 N·m (310 kgf·cm, 22 ft·lbf)

HINT:
At the time of reassembly, please refer to the following item.
Install the flexible hose lock securely in the lock hole in the caliper.

(b) Use a container to catch the brake fluid as it drains out.

3. REMOVE CALIPER

(a) Remove the 2 installation bolts.
Torque: 25 N·m (255 kgf·cm, 18 ft·lbf)

(b) Remove the caliper from the torque plate.

4. REMOVE 2 BRAKE PADS WITH ANTI–SQUEAL SHIMS

5. REMOVE 4 PAD SUPPORT PLATES

FRONT BRAKE PAD

BR0SQ–01

COMPONENTS

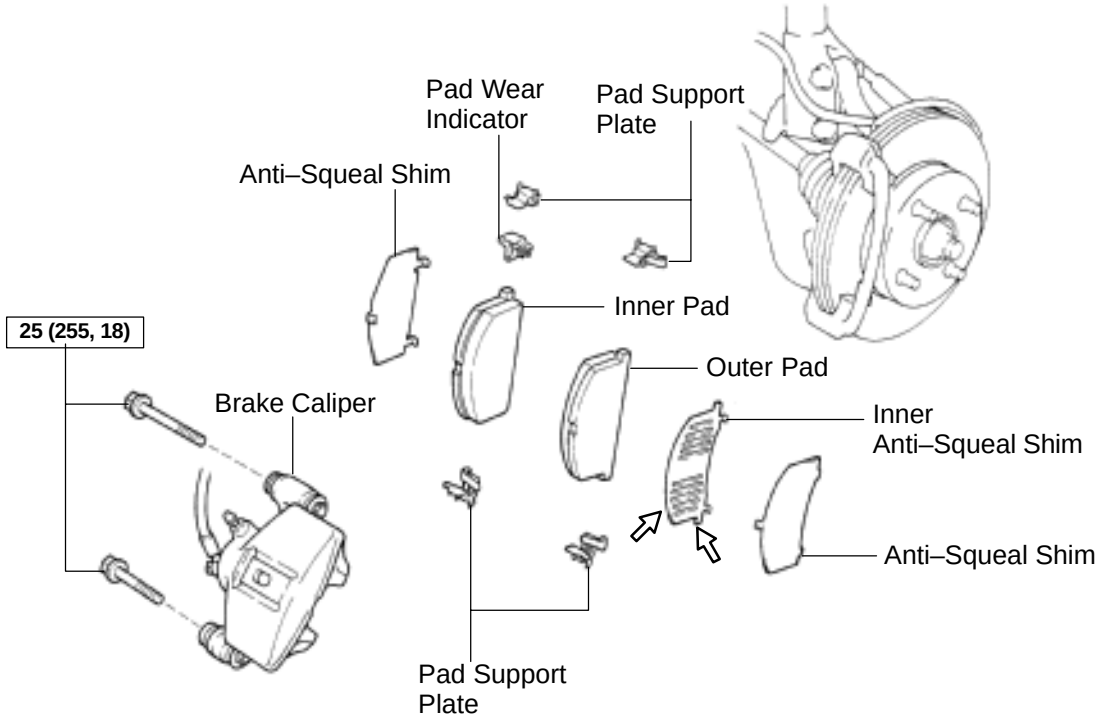

N·m (kgf·cm, ft·lbf) : Specified torque
⇨ Disc brake grease

F04742

BR0SR–02

REPLACEMENT

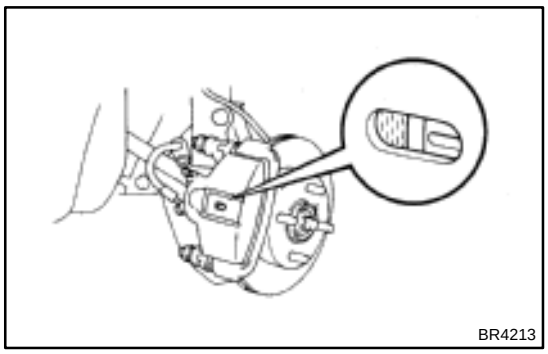
BR4213

1. REMOVE FRONT WHEEL

2. INSPECT PAD LINING THICKNESS

Check the pad thickness through the caliper inspection hole and replace the pads if they are not within the specification.

Minimum thickness: 1.0 mm (0.039 in.)

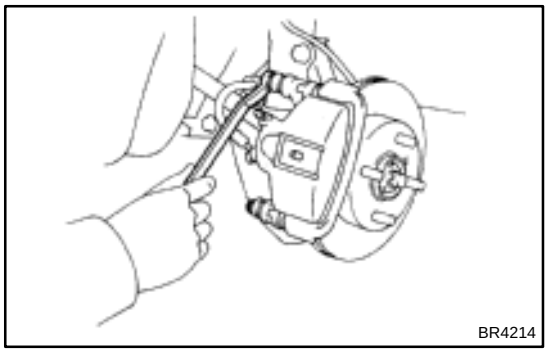
BR4214

3. REMOVE CALIPER

(a) Temporarily fasten the disc with 2 hub nuts.

(b) Remove the 2 installation bolts from the torque plate.

(c) Remove the caliper and suspend it securely.

HINT:

Do not disconnect the flexible hose from the caliper.

4. REMOVE 2 BRAKE PADS

5. REMOVE 3 ANTI–SQUEAL SHIMS

6. REMOVE PAD WEAR INDICATOR PLATE

7. REMOVE 4 PAD SUPPORT PLATES

NOTICE:

The support plates can be used again provided that they have sufficient rebound, no deformation, cracks or wear, and have had all rust, dirt and foreign particles cleaned off.

8. CHECK DISC THICKNESS AND RUNOUT

(See page BR–25)

9. INSTALL 4 PAD SUPPORT PLATES

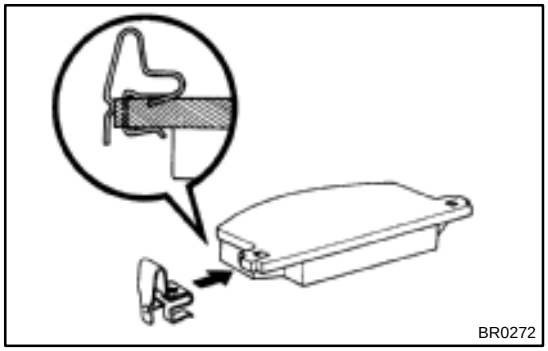
BR0272

10. INSTALL NEW PADS

NOTICE:

When replacing worn pads, the anti–squeal shims and wear indicator plates must be replaced together with the pads.

(a) Install a pad wear indicator plate on the inner pad.

(b) Apply disc brake grease to both sides of the inner anti–squeal shim (See page BR–19).

(c) Install the 2 anti–squeal shims on the outer pad.

(d) Install the anti–squeal shim to the inner pad.

(e) Install inner pad with the pad wear indicator plate facing upward.

(f) Install outer pad.

NOTICE:

There should be no oil or grease adhering to the friction surfaces of the pads or the disc.

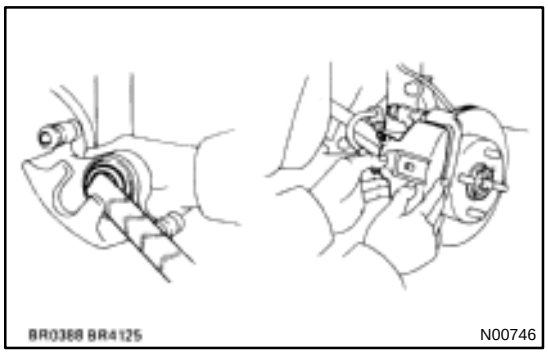

11. INSTALL CALIPER

(a) Draw out a small amount of brake fluid from the reservoir.

(b) Press in the piston with a hammer handle or similar implement.

HINT:

If the piston is difficult to push in, loosen the bleeder plug and push in the piston while letting some brake fluid escape.

(c) Install the caliper.

(d) Install the 2 installation bolts.

Torque: 25 N·m (255 kgf·cm, 18 ft·lbf)

(e) Remove the 2 hub nuts.

12. INSTALL FRONT WHEEL

13. CHECK THAT FLUID LEVEL IS AT MAX LINE

FRONT SPEED SENSOR

COMPONENTS

BR0T1–01

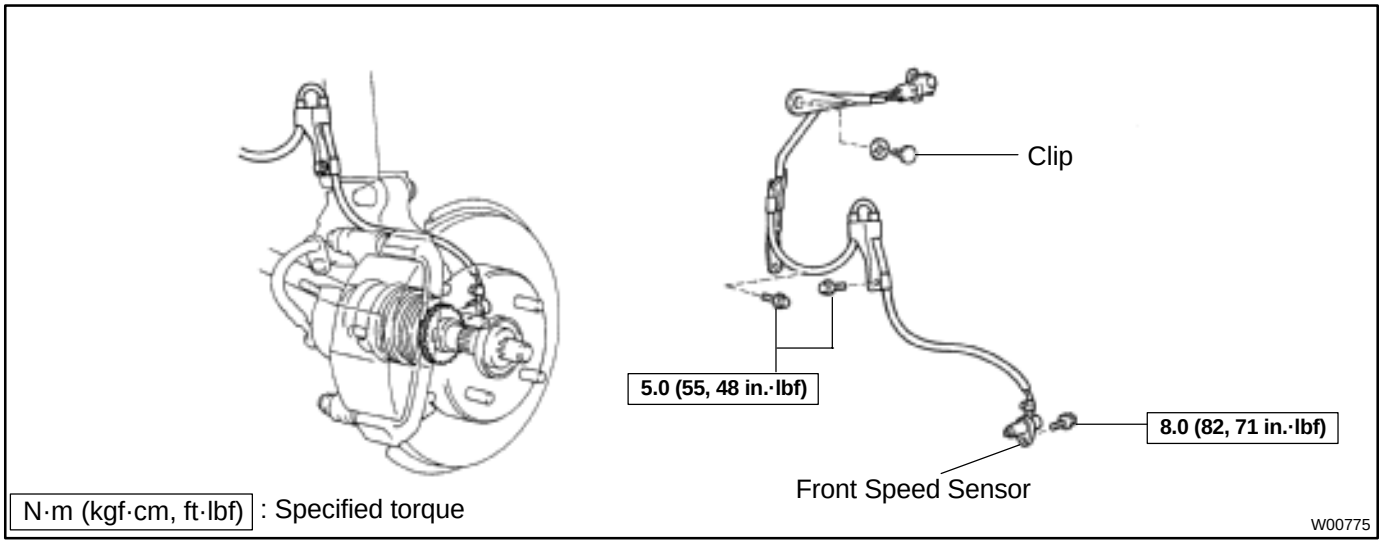

BR0T3–01

INSTALLATION

Installation is in the reverse order of removal (See page BR–43).

AFTER INSTALLATION, CHECK SPEED SENSOR SIGNAL (See page DI–173)

BR0T2–01

REMOVAL

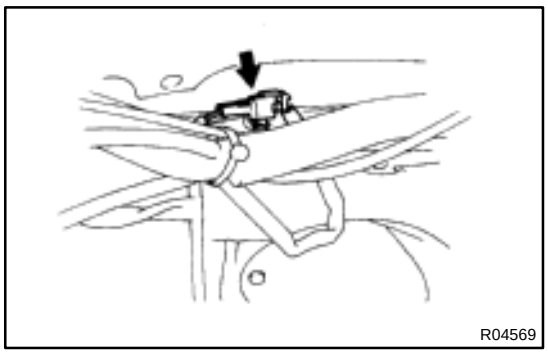
R04569

1. DISCONNECT SPEED SENSOR CONNECTOR

(a) Remove the fender liner.

(b) Disconnect the speed sensor connector.

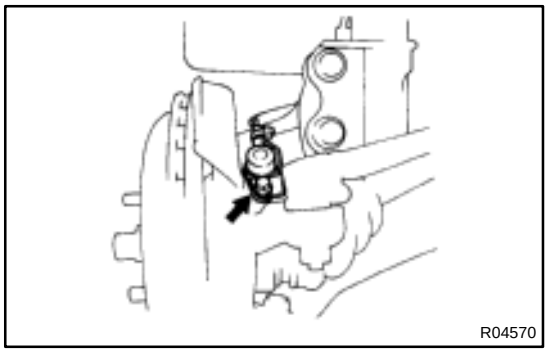
R04570

2. REMOVE SPEED SENSOR

(a) Remove the clip and 2 clamp bolts holding the sensor harness to the body and shock absorber.
Torque: 5.0 N·m (55 kgf·cm, 48 in.·lbf)

(b) Remove the speed sensor from the steering knuckle.
Torque: 8.0 N·m (82 kgf·cm, 71 in.·lbf)

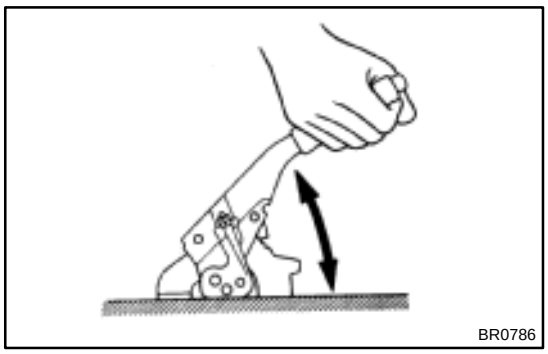
BR0786

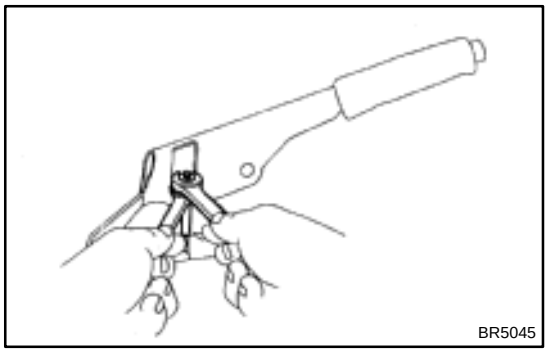
BR5045

PARKING BRAKE LEVER

BR0SF–01

ON–VEHICLE INSPECTION

1. CHECK THAT PARKING BRAKE LEVER TRAVEL

Pull the parking brake lever all the way up, and count the number of clicks.

Parking brake lever travel at 196 N (20 kgf, 44.1 lbf): 5 – 8 clicks

If incorrect, adjust the parking brake.

2. IF NECESSARY, ADJUST PARKING BRAKE LEVER TRAVEL

HINT:

Before adjusting the parking brake lever travel, make sure that the rear brake shoe clearance has been adjusted. For shoe clearance adjustment (See page BR–34).

(a) Remove the console box.

(b) Loosen the adjusting nut until the lever travel is correct.

(c) Tighten the lock nut.

Torque: 5.4 N·m (55 kgf·cm, 48 in.·lbf)

(d) Install the console box.

PROPORTIONING VALVE (P VALVE)

BR0SX–03

ON–VEHICLE INSPECTION

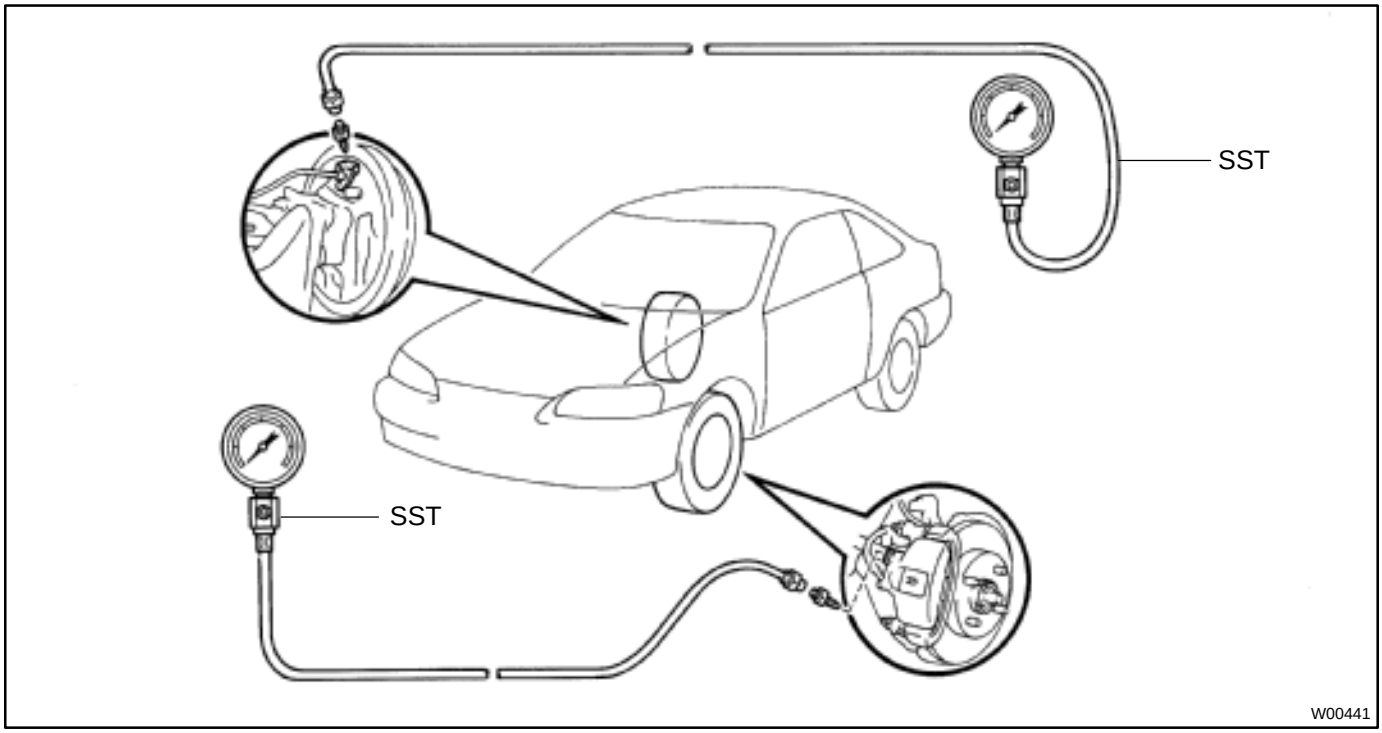

1. INSTALL LSPV GAUGE (SST) AND BLEED AIR
SST 09709–29018

2. BLEED AIR FROM FLUID PRESSURE GAUGE

3. RAISE MASTER CYLINDER PRESSURE AND CHECK REAR WHEEL CYLINDER PRESSURE

Master cylinder fluid pressure	Rear wheel cylinder fluid pressure
w/o ABS:	w/o ABS:
1,961 kPa (20 kgf/cm^2, 284 psi)	1,961 kPa (20 kgf/cm^2, 284 psi)
7,845 kPa (80 kgf/cm^2, 1,138 psi)	3,432 kPa (35 kgf/cm^2, 498 psi)
w/ ABS:	w/ ABS:
2,452 kPa (25 kgf/cm^2, 356 psi)	2,452 kPa (25 kgf/cm^2, 356 psi)
7,845 kPa (80 kgf/cm^2, 1,138 psi)	3,805 kPa (38.8 kgf/cm^2, 552 psi)

When inspecting the fluid pressure, inspect the left front and right rear wheels together, and the right front and left rear together.

If the rear brake cylinder pressure is incorrect, replace the P valve assembly.

4. BLEED BRAKE SYSTEM (See page BR–4)

5. CHECK FOR LEAKS

REAR BRAKE DRUM

COMPONENTS

BR03E–12

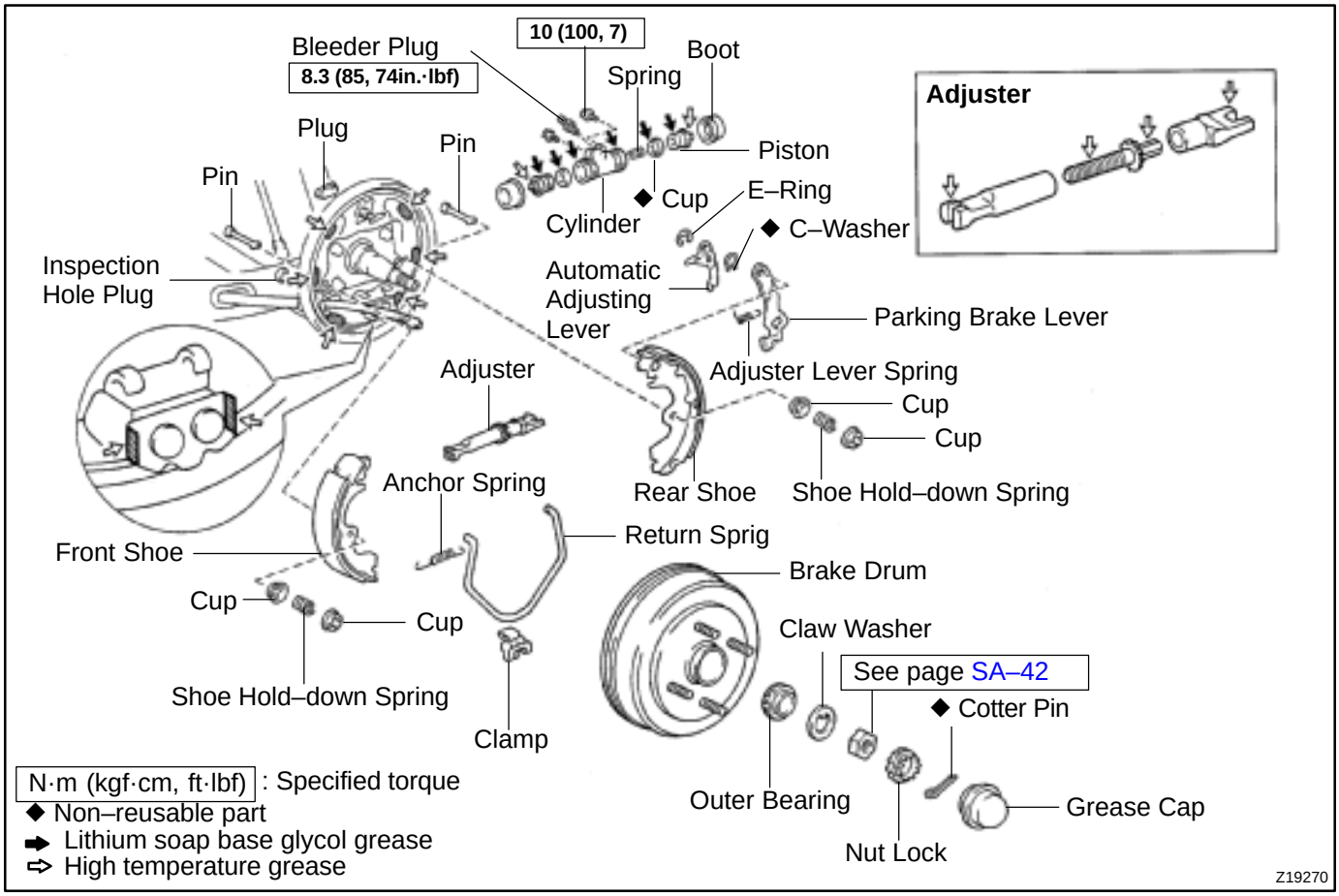

BR0P5–02

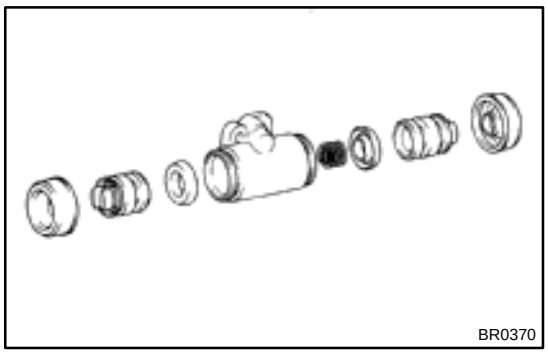
BR0370

DISASSEMBLY

DISASSEMBLE WHEEL CYLINDER

(a) Remove the 2 boots.
(b) Remove the 2 pistons with piston cups.
(c) Remove the spring.

BR0P6–02

INSPECTION

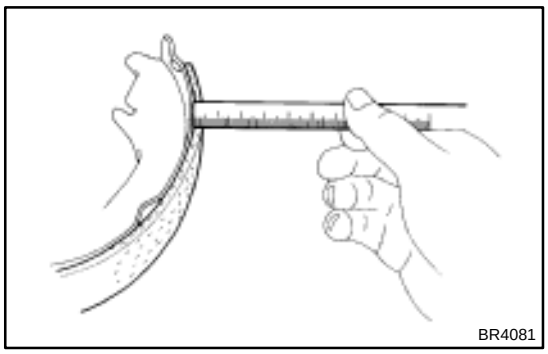
BR4081

1. INSPECT DISASSEMBLED PARTS

Inspect the disassembled parts for wear, rust or damage.

2. MEASURE BRAKE SHOE LINING THICKNESS

Using a ruler, measure the shoe lining thickness.

Standard thickness: 4.0 mm (0.157 in.)

Minimum thickness: 1.0 mm (0.039 in.)

If the shoe lining is less than the minimum, or shows signs of uneven wear, replace the brake shoes.

HINT:

If any of the brake shoes have to be replaced, replace all of the rear brake shoes in order to maintain even braking.

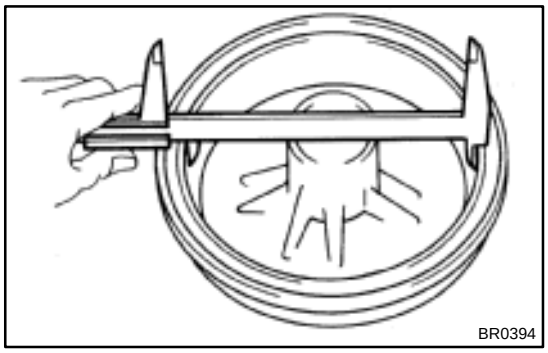
BR0394

3. MEASURE BRAKE DRUM INSIDE DIAMETER

Using vernier calipers, measure the inside diameter of the drum.

Standard inside diameter: 180.0 mm (7.087 in.)

Maximum inside diameter: 181.0 mm (7.126 in.)

If the drum is scored or worn, the brake drum may be lathed to the maximum inside diameter.

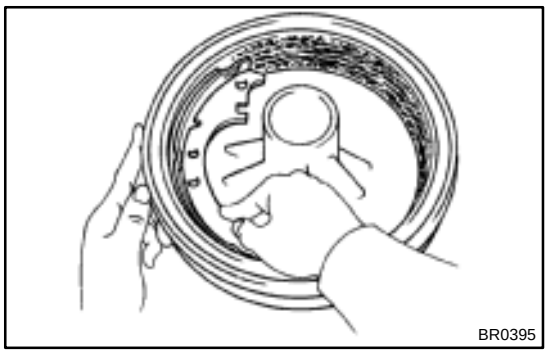
BR0395

4. INSPECT REAR BRAKE LINING AND DRUM FOR PROPER CONTACT

If the contact between the brake lining and drum is improper, repair the lining with a brake shoe grinder, or replace the brake shoe assembly.

BR03H–08

INSTALLATION

Installation is in the reverse order of removal (See page BR–29).

AFTER INSTALLATION, FILL BRAKE RESERVOIR WITH BRAKE FLUID, BLEED BRAKE SYSTEM (See page BR–4) AND CHECK FOR LEAKS

NOTICE:

Apply lithium soap base glycol grease and high temperature grease to the parts indicated by the arrows (See page BR–28).

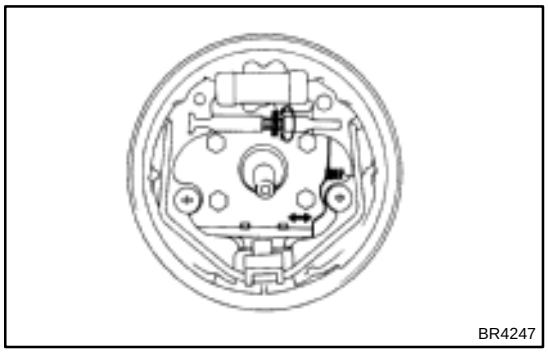
BR4247

1. CHECK OPERATION OF AUTOMATIC ADJUSTING MECHANISM

(a) Move the parking brake lever of the rear shoe back and forth. Check that the adjuster turns.

If the adjuster does not turn, check for incorrect installation of the rear brakes.

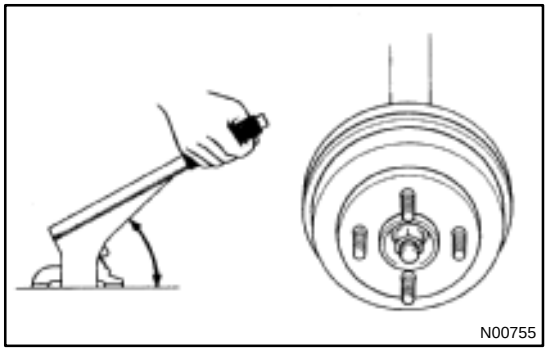
N00755

(b) Adjust the adjuster length to the shortest possible amount.

(c) Install the brake drum.

(d) Pull the parking brake lever all the way up until a clicking sound can no longer be heard.

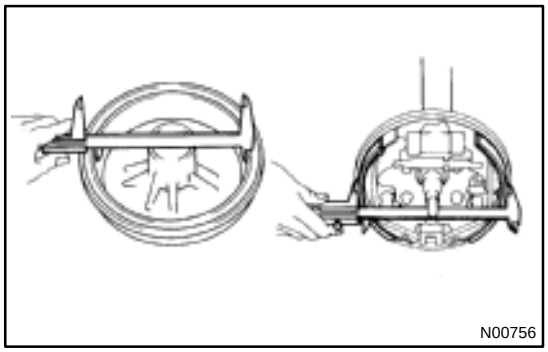
N00756

2. CHECK CLEARANCE BETWEEN BRAKE SHOES AND DRUM

(a) Remove the drum.

(b) Measure the brake drum inside diameter and diameter of the brake shoes. Check that the difference between the diameters is the correct shoe clearance.

Shoe clearance: 0.6 mm (0.024 in.)

If incorrect, check the parking brake system.

BR0P7–02

REASSEMBLY

Reassembly is in the reverse order of disassembly (see page BR–31).

NOTICE:

Apply lithium soap base glycol grease to the parts indicated by arrows (See page BR–28).

BR03F–03

REMOVAL

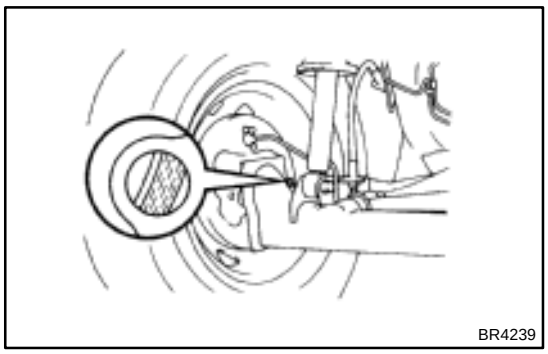
BR4239

1. INSPECT SHOE LINING THICKNESS

Remove the inspection hole plug, and check the shoe lining thickness through the hole.

If less than the minimum, replace the shoes.

Minimum thickness: 1.0 mm (0.039 in.)

2. REMOVE REAR WHEEL

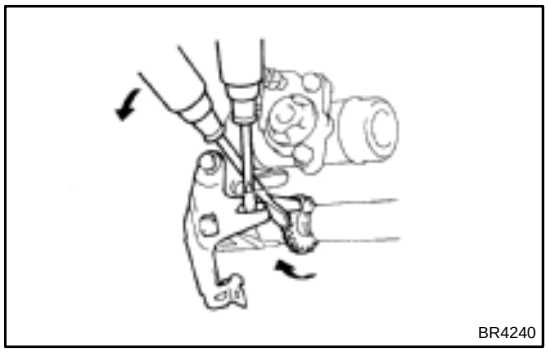
BR4240

3. REMOVE BRAKE DRUM (See page SA–42)

HINT:

If the brake drum cannot be removed easily, do the following steps.

(a) Insert a screwdriver or equivalent through the hole in the backing plate, and hold the automatic adjusting lever away from the adjuster.

(b) Using another screwdriver, reduce the brake shoe adjustment by turning the adjuster.

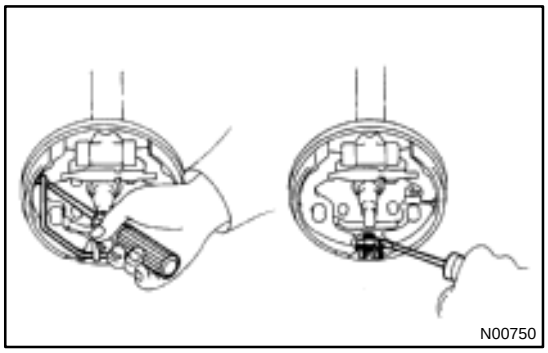
N00750

4. REMOVE FRONT SHOE

(a) Using a screwdriver, remove the return spring and clamp.

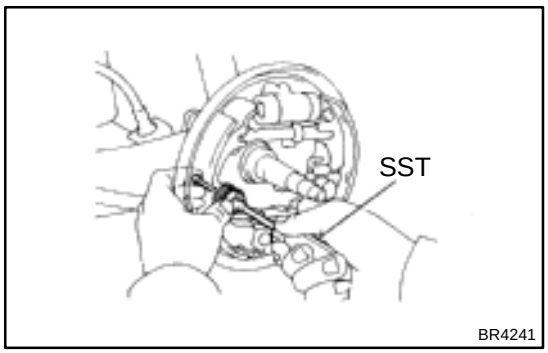

BR4241

(b) Using SST, remove the shoe hold–down spring, cups and pin.

SST 09718–00010

(c) Disconnect the anchor spring from the front shoe and remove the front shoe.

(d) Remove the anchor spring from the rear shoe.

5. REMOVE REAR SHOE

(a) Using SST, remove the shoe hold–down spring, cups and pin.

SST 09718–00010

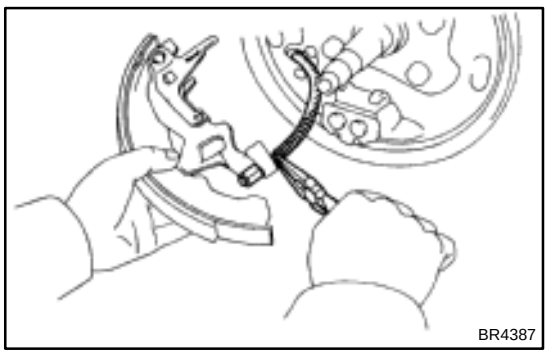
BR4387

(b) Using pliers, remove the adjusting lever spring.

(c) Remove the adjuster.

(d) Using pliers, disconnect the parking brake cable from the lever and remove the rear shoe.

NOTICE:

Do not allow oil or grease to get on the rubbing surface.

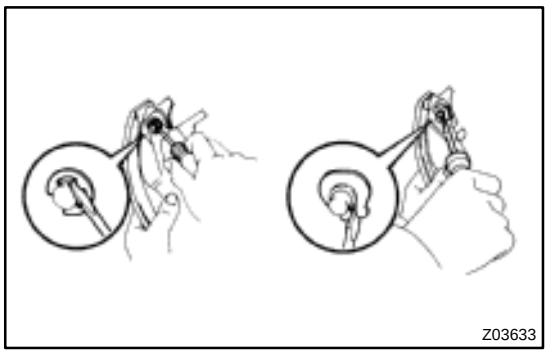

6. REMOVE AUTOMATIC ADJUSTING LEVER AND PARKING BRAKE LEVER

(a) Using a screwdriver, remove the E–ring.
(b) Remove the automatic adjusting lever.
(c) Using a screwdriver, remove the C–washer.
(d) Remove the parking brake lever.

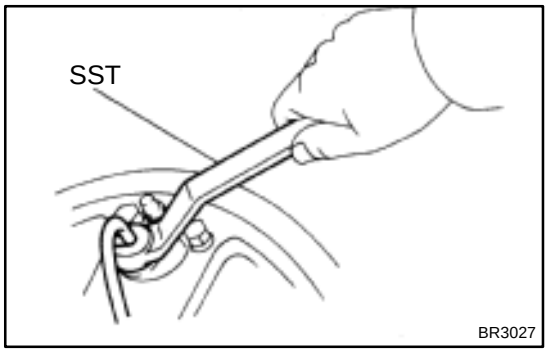

7. REMOVE WHEEL CYLINDER

(a) Using SST, disconnect the brake line. Use a container to catch the brake fluid.
Torque: 15 N·m (155 kgf·cm, 11 ft·lbf)
SST 09751–36011
(b) Remove the 2 bolts and the wheel cylinder.
Torque: 10 N·m (100 kgf·cm, 7 ft·lbf)

REAR SPEED SENSOR

COMPONENTS

BR0T4–02

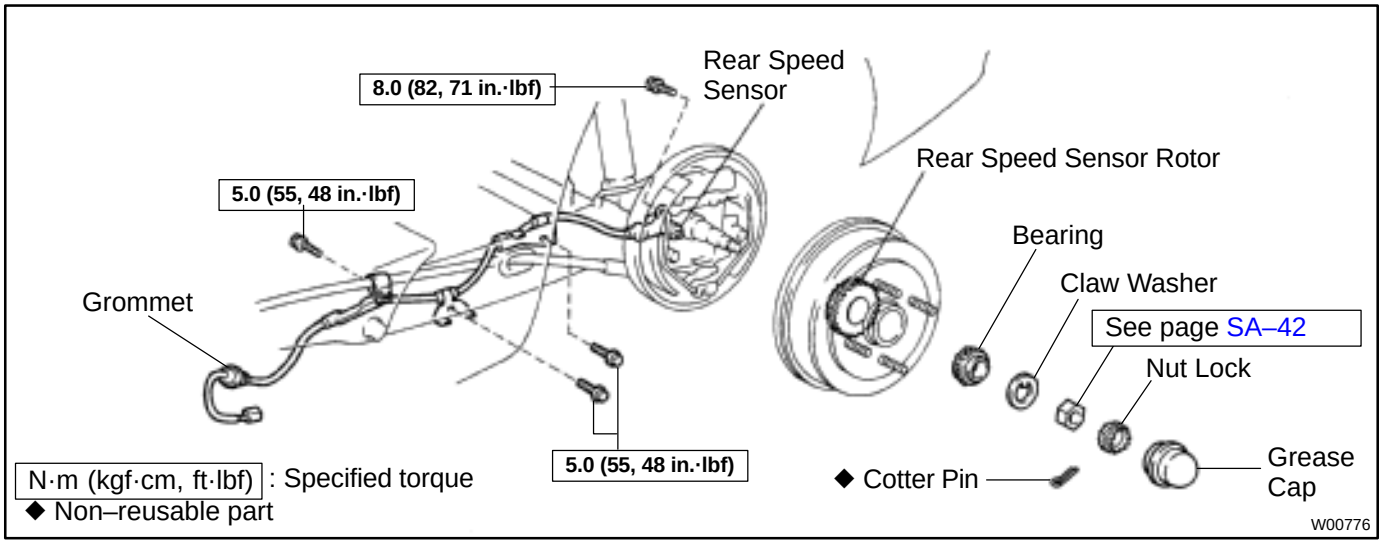

BR0T6–01

INSTALLATION

Installation is in the reverse order of removal (See page BR–46).
AFTER INSTALLATION, CHECK SPEED SENSOR SIGNAL (See page DI–173)

BR0T5–01

REMOVAL

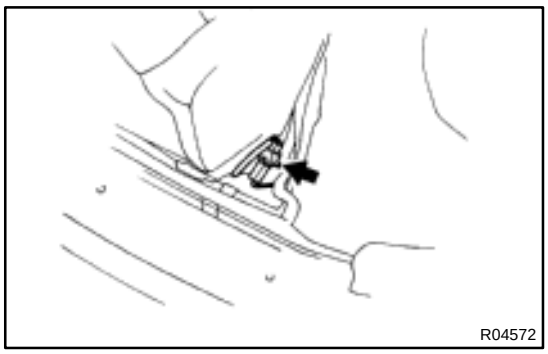

1. DISCONNECT SPEED SENSOR CONNECTOR

(a) Remove the rear seat cushion.

(b) Disconnect the speed sensor connector, and pull out the sensor wire harness with the grommet.

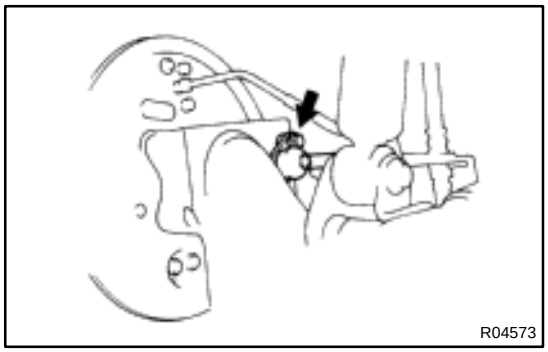

2. REMOVE SPEED SENSOR

(a) Remove the 3 clamp bolts holding the sensor wire harness to the axle beam.
Torque: 5.0 N·m (55 kgf·cm, 48 in.·lbf)

(b) Remove the speed sensor from the axle beam.
Torque: 8.0 N·m (82 kgf·cm, 71 in.·lbf)

TROUBLESHOOTING

BR0SC–02

PROBLEM SYMPTOMS TABLE

Use the table below to help you find the cause of the problem. The numbers indicate the priority of the likely cause of the problem. Check each part in order. If necessary, replace these parts.

Symptom	Suspect Area	See page
Low pedal or spongy pedal	1. Fluid leaks for brake system	DI–208
	2. Air in brake system	BR–4
	3. Piston seals (Worn or damaged)	BR–22
	4. Rear brake shoe clearance (Out of adjustment)	BR–34
	5. Master cylinder (Faulty)	BR–8
	6. Booster push rod (Out of adjustment)	BR–18
Brake drag	1. Brake pedal freeplay (Minimal)	BR–5
	2. Parking brake lever travel (Out of adjustment)	BR–7
	3. Parking brake wire (Sticking)	–
	4. Rear brake shoe clearance (Out of adjustment)	BR–34
	5. Pad or lining (Cracked or distorted)	BR–19 BR–28
	6. Piston (Stuck)	BR–22 BR–28
	7. Piston (Frozen)	BR–22 BR–28
	8. Anchor or return spring (Faulty)	BR–28
	9. Booster push rod (Out of adjustment)	BR–18
	10. Vacuum leaks for booster system	BR–15
	11. Master cylinder (Faulty)	BR–8
Brake pull	1. Piston (Stuck)	BR–22 BR–28
	2. Pad or lining (Cracked or distorted)	BR–19 BR–28
	3. Piston (Frozen)	BR–22 BR–28
	4. Disc (Scored)	BR–22
	5. Pad or lining (Cracked or distorted)	BR–19 BR–28
Hard pedal but brake inefficient	1. Fluid leaks for brake system	DI–208
	2. Air in brake system	BR–4
	3. Pad or lining (Worn)	BR–19 BR–28
	4. Pad or lining (Cracked or distorted)	BR–19 BR–28
	5. Rear brake shoe clearance (Out of adjustment)	BR–34
	6. Pad or lining (Oily)	BR–19 BR–28
	7. Pad or lining (Glazed)	BR–19 BR–28
	8. Disc (Scored)	BR–22
	9. Booster push rod (Out of adjustment)	BR–18
	10. Vacuum leaks for booster system	BR–15

Symptom	Suspect Area	See page
Noise from brakes	1. Pad or lining (Cracked or distorted)	BR–19 BR–28
	2. Installation bolt (Loosen)	BR–22
	3. Disc (Scored)	BR–22
	4. Pad support plate (Loosen)	BR–19
	5. Sliding pin (Worn)	BR–22
	6. Pad or lining (Dirty)	BR–19 BR–28
	7. Pad or lining (Glazed)	BR–19 BR–28
	8. Anchor or return spring (Faulty)	BR–28
	9. Anti–squeal shim (Damaged)	BR–19
	10. Shoe hold–down spring (Damaged)	BR–28

CH066–01

ON–VEHICLE INSPECTION

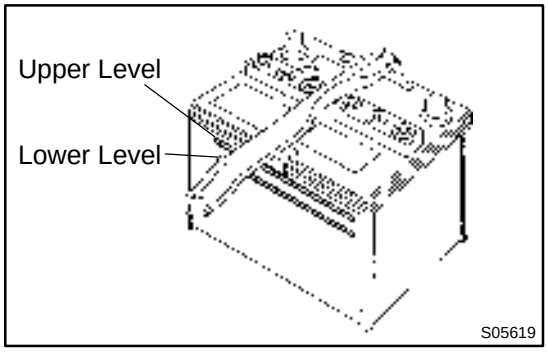

1. CHECK BATTERY ELECTROLYTE LEVEL

Check the electrolyte quantity of each cell.

Maintenance–Free Battery:

If under the lower level, replace the battery (or add distilled water if possible). Check the charging system.

Except Maintenance–Free Battery:

If under the lower level, add distilled water.

Except Maintenance–Free Battery

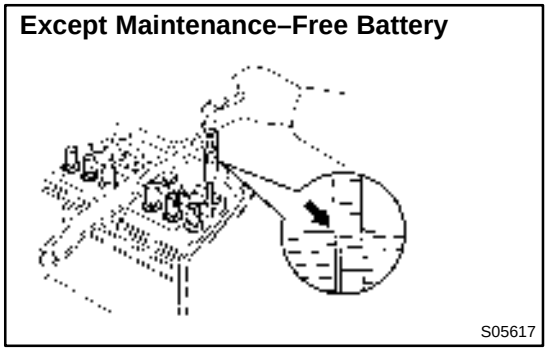

2. Except Maintenance–Free Battery: CHECK BATTERY SPECIFIC GRAVITY

Check the specific gravity of each cell.

Standard specific gravity:
1.26 – 1.28 at 20˚C (68˚F)

If the specific gravity is less than specification, charge the battery.

Maintenance–Free Battery

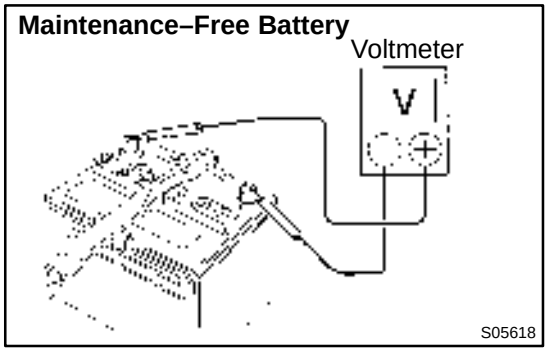

3. Maintenance–Free Battery: CHECK BATTERY VOLTAGE

(a) After having driven the vehicle and in the case that 20 minutes have not passed after having stopped the engine, turn the ignition switch ON and turn on the electrical system (headlight, blower motor, rear defogger etc.) for 60 seconds to remove the surface charge.

(b) Turn the ignition switch OFF and turn off the electrical systems.

(c) Measure the battery voltage between the negative (–) and positive (+) terminals of the battery.
Standard voltage: 12.5 – 12.9 V at 20˚C (68˚F)

Maintenance–Free Battery

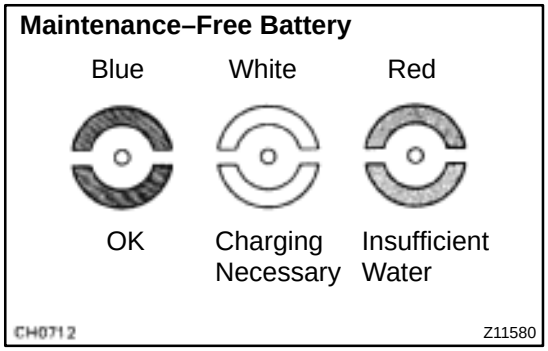

If the voltage is less than specification, charge the battery.

HINT:

Check the indicator as shown in illustration.

4. CHECK BATTERY TERMINALS, FUSIBLE LINK AND FUSES

(a) Check that the battery terminals are not loose or corroded.

If the terminals are corroded, clean the terminals.

(b) Check the fusible link and fuses for continuity.

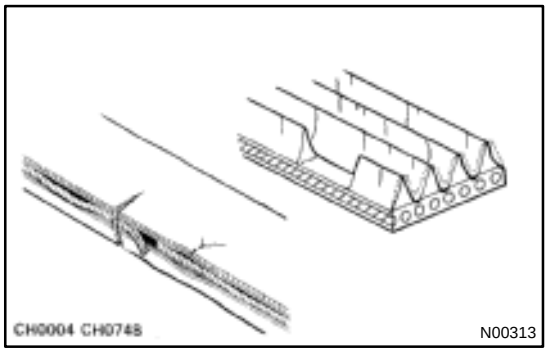

5. INSPECT DRIVE BELT

(a) Visually check the drive belt for excessive wear, frayed cords etc.

If any defect is found, replace the drive belt.

HINT:

Cracks on the rib side of a drive belt are considered acceptable. If the drive belt has chunks missing from the ribs, it should be replaced.

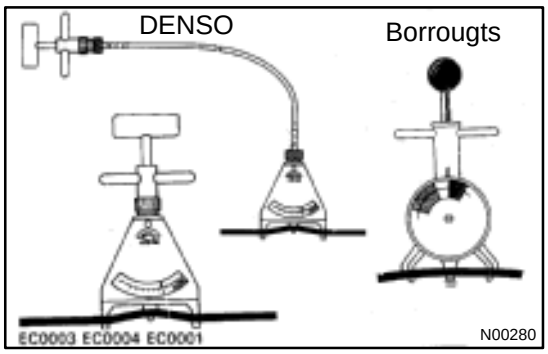

(b) Using a belt tension gauge, measure the belt tension.
Belt tension gauge:
DENSO BTG–20 (95506–00020)
Borroughs No. BT–33–73F
Drive belt tension:

New belt	160 ± 20 lbf
Used belt	100 ± 20 lbf

If the belt tension is not as specified, adjust it.
HINT:

- ”New belt” refers to a belt which has been used less than 5 minutes on a running engine.
- ”Used belt” refers to a belt which has been used on a running engine for 5 minutes or more.
- After installing a belt, check that it fits properly in the ribbed grooved.
- Check by hand to confirm that the belt has not slipped out of the groove on the bottom of the pulley.
- After installing a new belt, run the engine for about 5 minutes and recheck the belt tension.

6. VISUALLY CHECK GENERATOR WIRING AND LISTEN FOR ABNORMAL NOISES

(a) Check that the wiring is in good condition.
(b) Check that there is no abnormal noise from the generator while the engine is running.

7. INSPECT CHARGE WARNING LIGHT CIRCUIT

(a) Warm up the engine and then turn it off.
(b) Turn off all accessories.
(c) Turn the ignition switch ”ON”. Check that the charge warning light is lit.
(d) Start the engine. Check that the light goes off.

If the light does not go off as specified, troubleshoot the charge light circuit.

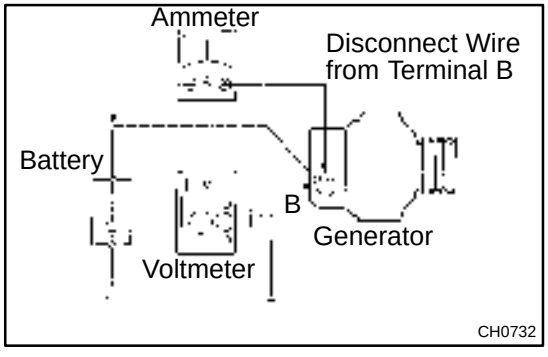

8. INSPECT CHARGING CIRCUIT WITHOUT LOAD

HINT:
If a battery/generator tester is available, connect the tester to the charging circuit as per manufacturer’s instructions.

(a) If a tester is not available, connect a voltmeter and ammeter to the charging circuit as follows:
- Disconnect the wire from terminal B of the generator and connect it to the negative (–) tester probe of the ammeter.

- Connect the positive (+) tester probe of the ammeter to terminal B of the generator.
- Connect the positive (+) tester probe of the voltmeter to terminal B of the generator.
- Ground the negative (–) tester probe of the voltmeter.

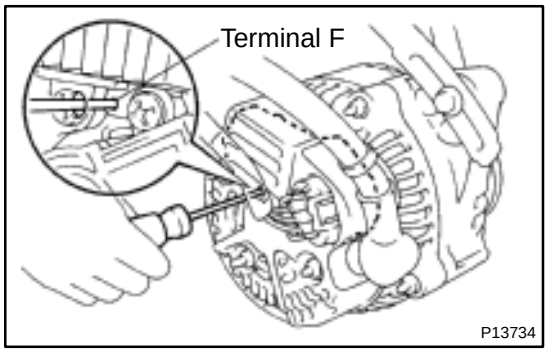

(b) Check the charging circuit as follows:
With the engine running from idling to 2,000 rpm, check the reading on the ammeter and voltmeter.
Standard amperage: 10 A or less
Standard voltage: 13.5 – 15.1 V

If the voltmeter reading is greater than standard voltage, replace the voltage regulator.
If the voltmeter reading is less than standard voltage, check the voltage regulator and generator as follows:

- With terminal F grounded, start the engine and check the voltmeter reading of terminal B.
- If the voltmeter reading is greater than standard voltage, replace the voltage regulator.
- If the voltmeter reading is less than standard voltage, check the generator.

9. INSPECT CHARGING CIRCUIT WITH LOAD

(a) With the engine running at 2,000 rpm, turn on the high beam headlights and place the heater blower switch at "HI".

(b) Check the reading on the ammeter.
Standard amperage: 30 A or more

If the ammeter reading is less than the standard amperage, repair the generator.
HINT:
If the battery is fully charged, the indication will sometimes be less than standard amperage.

CHARGING SYSTEM

CH065–01

PRECAUTION

1. **Check that the battery cables are connected to the correct terminals.**
2. **Disconnect the battery cables when the battery is given a quick charge.**
3. **Do not perform tests with a high voltage insulation resistance tester.**
4. **Never disconnect the battery while the engine is running.**

GENERATOR

CH067–02

COMPONENTS

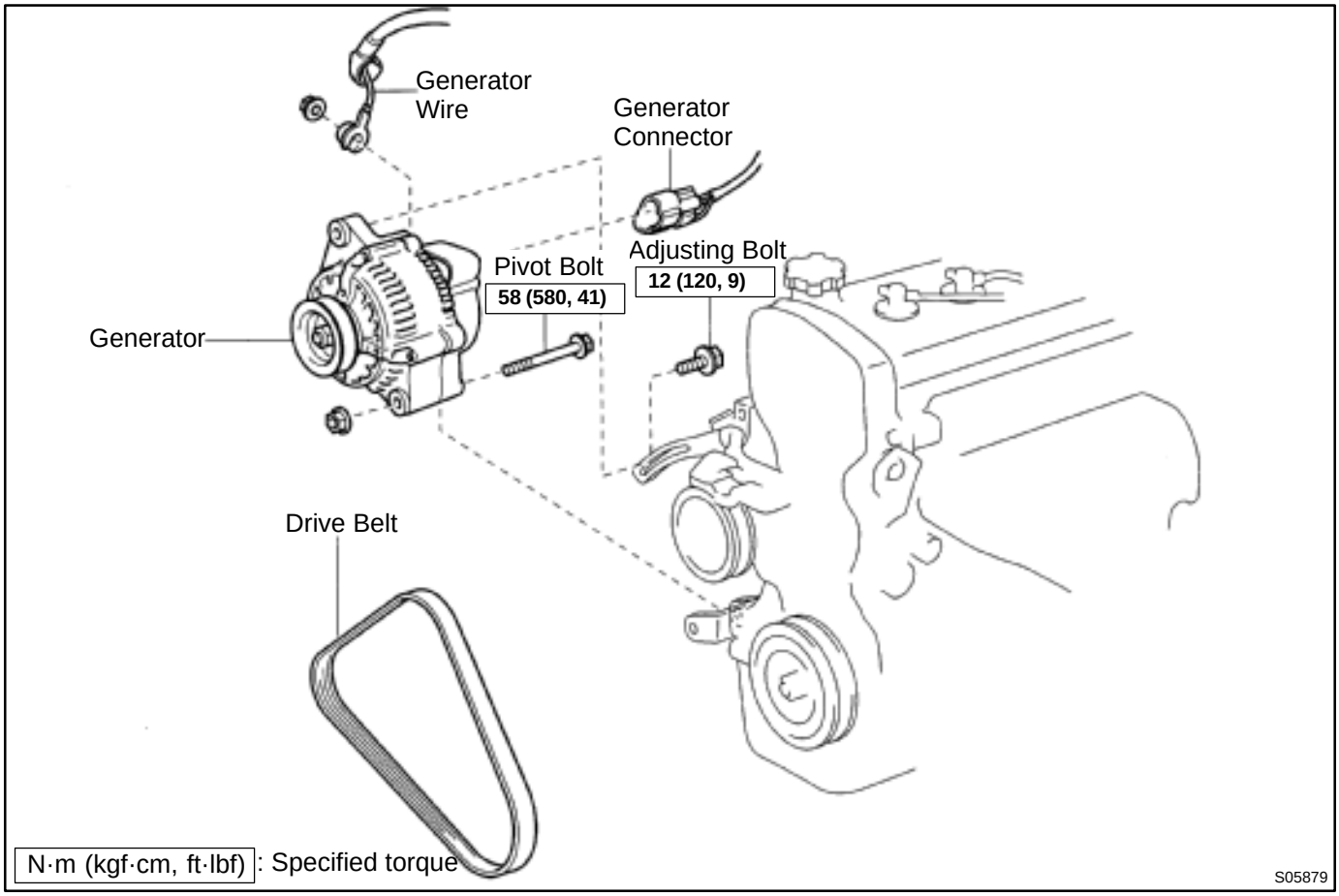

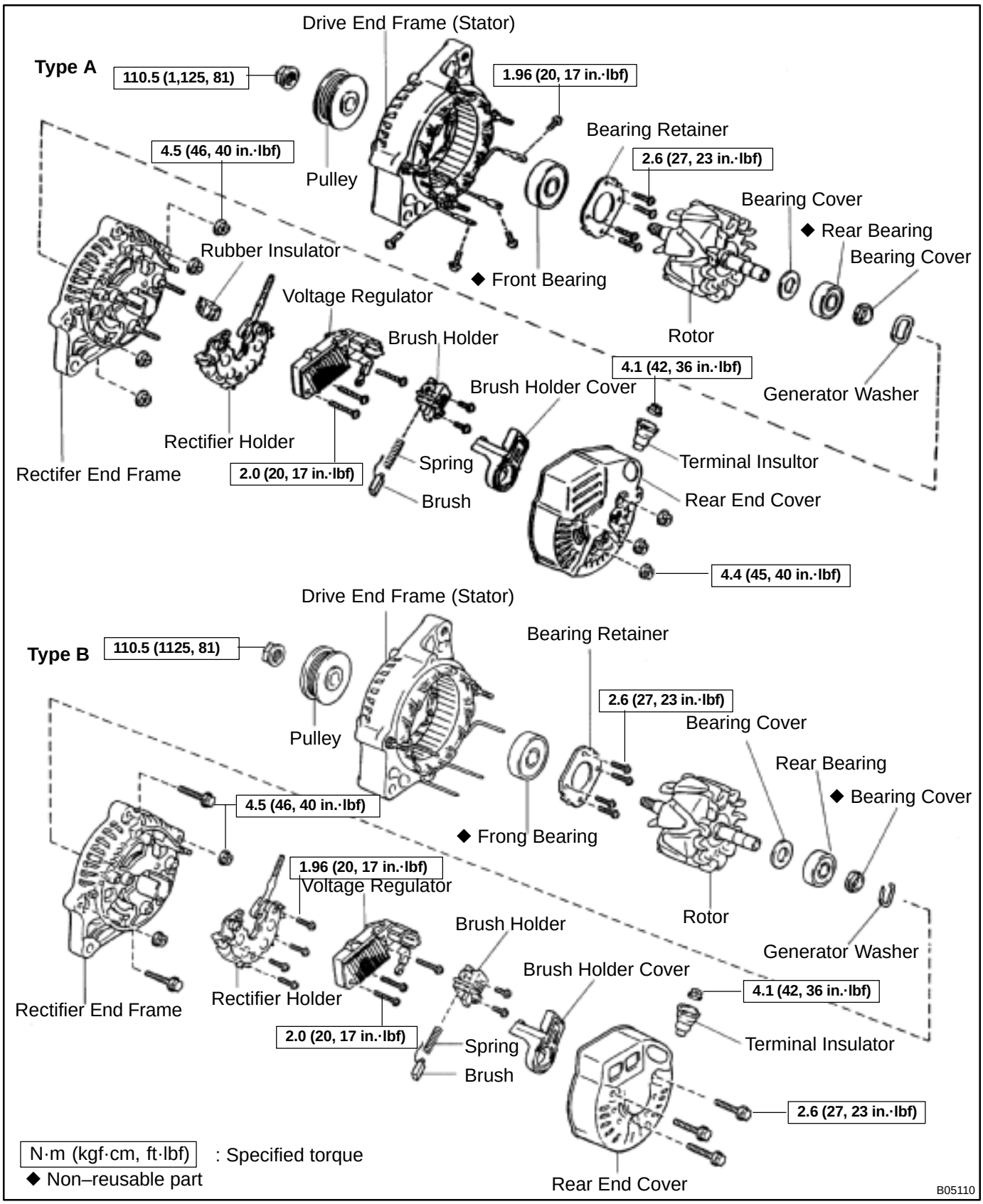
Type A
Drive End Frame (Stator)
110.5 (1,125, 81)
1.96 (20, 17 in.·lbf)
Pulley
Bearing Retainer
2.6 (27, 23 in.·lbf)
4.5 (46, 40 in.·lbf)
Bearing Cover
◆ Rear Bearing
Bearing Cover
Rubber Insulator
◆ Front Bearing
Voltage Regulator
Rotor
Brush Holder
4.1 (42, 36 in.·lbf)
Brush Holder Cover
Generator Washer
Rectifer End Frame
Rectifier Holder
2.0 (20, 17 in.·lbf)
Spring
Terminal Insultor
Brush
Rear End Cover
4.4 (45, 40 in.·lbf)
Type B
Drive End Frame (Stator)
110.5 (1125, 81)
Bearing Retainer
2.6 (27, 23 in.·lbf)
Pulley
Bearing Cover
Rear Bearing
◆ Bearing Cover
4.5 (46, 40 in.·lbf)
◆ Frong Bearing
1.96 (20, 17 in.·lbf)
Voltage Regulator
Rotor
Brush Holder
Generator Washer
Brush Holder Cover
Rectifier End Frame
Rectifier Holder
4.1 (42, 36 in.·lbf)
2.0 (20, 17 in.·lbf)
Spring
Terminal Insulator
Brush
2.6 (27, 23 in.·lbf)
Rear End Cover
N·m (kgf·cm, ft·lbf) : Specified torque
◆ Non–reusable part
B05110

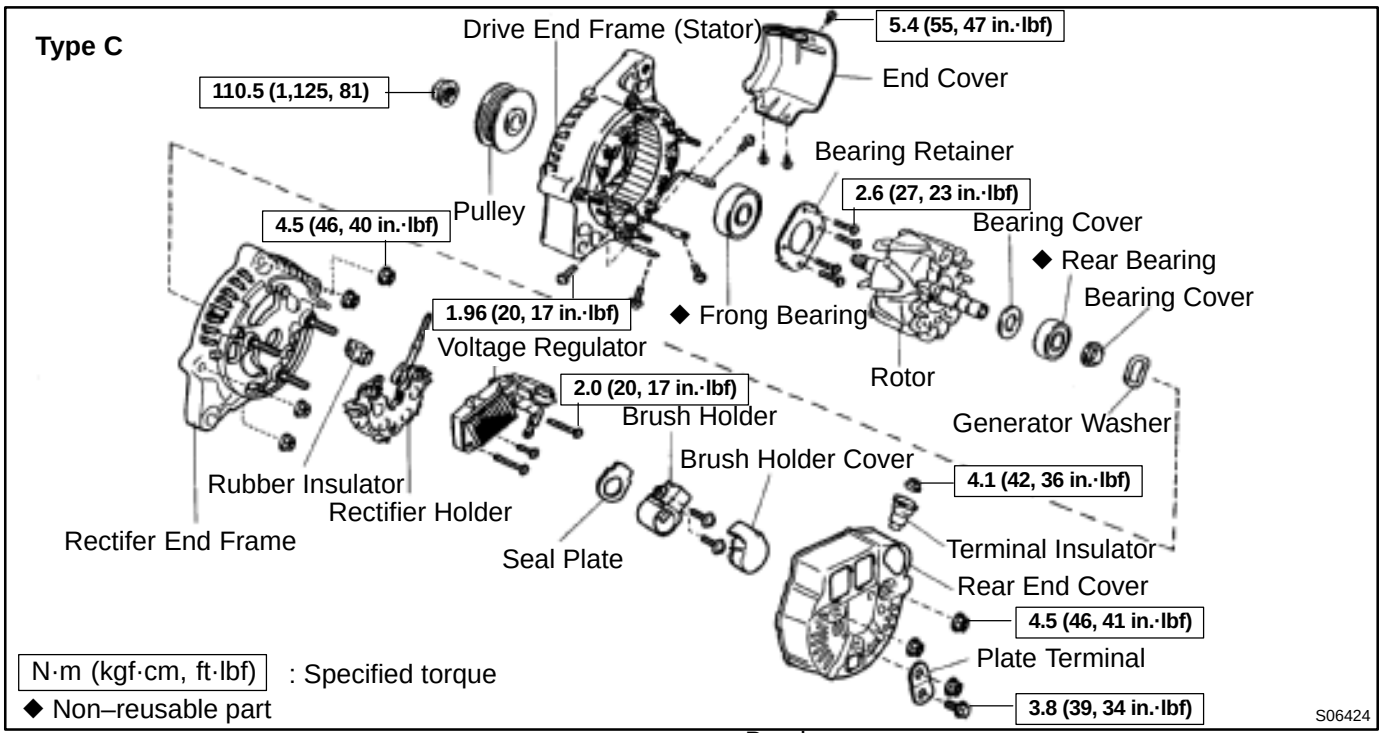
Type C
Drive End Frame (Stator)
5.4 (55, 47 in.·lbf)
End Cover
110.5 (1,125, 81)
Bearing Retainer
2.6 (27, 23 in.·lbf)
Pulley
Bearing Cover
4.5 (46, 40 in.·lbf)
◆ Rear Bearing
Bearing Cover
1.96 (20, 17 in.·lbf)
◆ Frong Bearing
Voltage Regulator
Rotor
2.0 (20, 17 in.·lbf)
Brush Holder
Generator Washer
Brush Holder Cover
4.1 (42, 36 in.·lbf)
Rubber Insulator
Rectifier Holder
Terminal Insulator
Rectifer End Frame
Seal Plate
Rear End Cover
4.5 (46, 41 in.·lbf)
Plate Terminal
3.8 (39, 34 in.·lbf)
N·m (kgf·cm, ft·lbf) : Specified torque
◆ Non–reusable part
S06424

CH069–01

DISASSEMBLY

1. REMOVE REAR END COVER

(a) Type C:
Remove the 3 bolts and end cover.

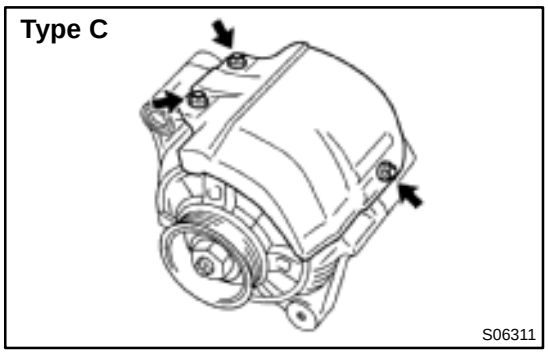

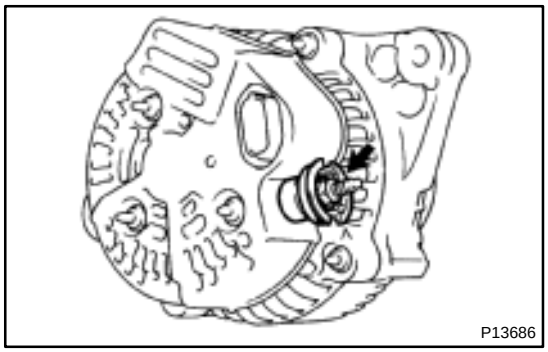

(b) Remove the nut and terminal insulator.

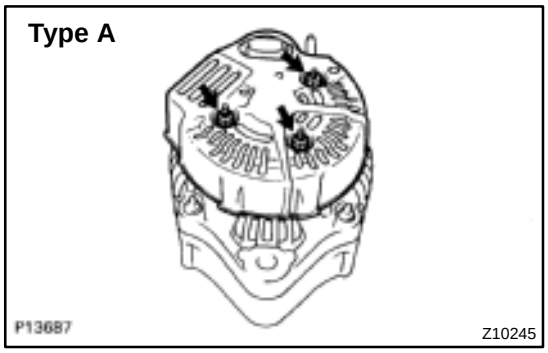

(c) Type A:
Remove the 3 nuts and end cover.

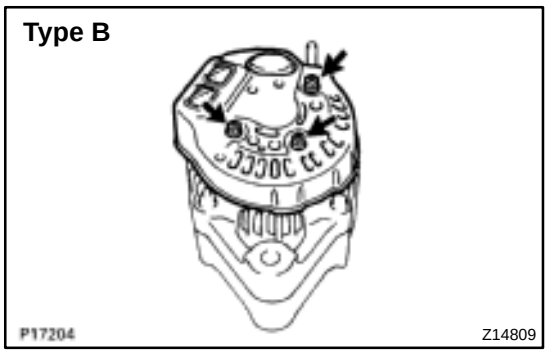

(d) Type B:
Remove the 3 bolts and end cover.

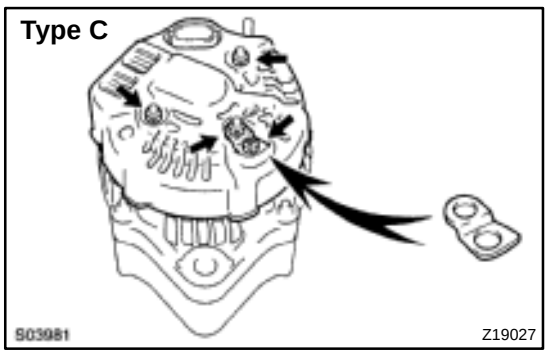

(e) Type C:
Remove the bolt, 3 nuts, plate terminal and end cover.

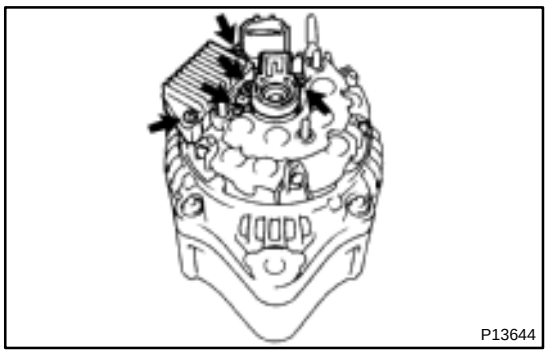

2. Type A and Type B:
REMOVE BRUSH HOLDER AND VOLTAGE REGULATOR

(a) Remove the 5 screws, brush holder and voltage regulator.
(b) Remove the brush holder cover from the brush holder.

3. Type C:
REMOVE BRUSH HOLDER AND VOLTAGE REGULATOR

(a) Remove the brush holder cover from the brush holder.
(b) Remove the 5 screws, brush holder and voltage regulator.
(c) Remove the seal plate from the rectifier end frame.

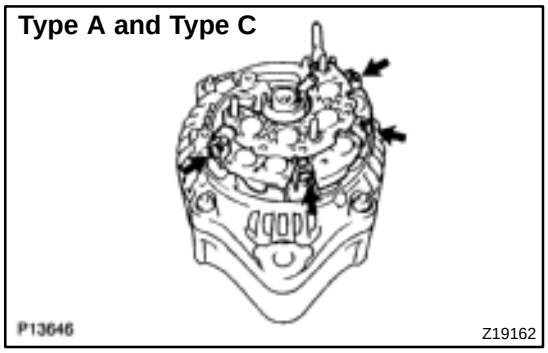

4. Type A and Type C:
REMOVE RECTIFIER HOLDER

(a) Remove the 4 screws and rectifier holder.
(b) Remove the 4 rubber insulators.

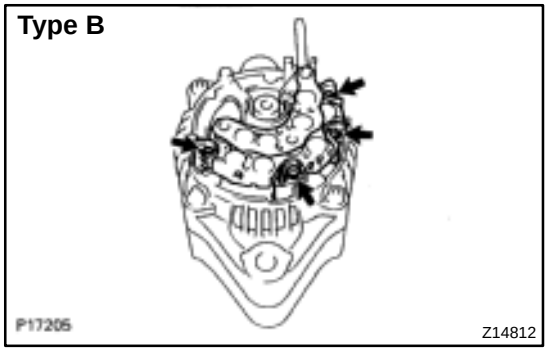

5. Type B:
REMOVE RECTIFIER HOLDER

(a) Remove the 4 screws.
(b) Using needle–nose pliers, straighten the stator lead wire.
(c) Remove the rectifier holder.

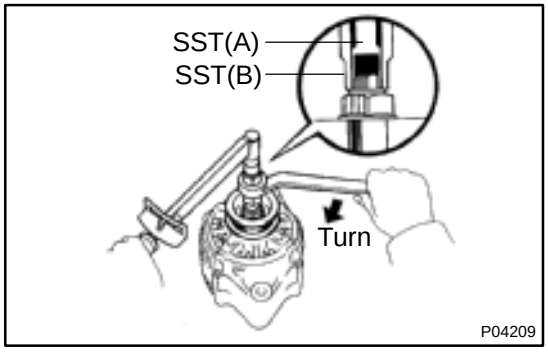

6. REMOVE PULLEY

(a) Hold SST (A) with a torque wrench, and tighten SST (B) clockwise to the specified torque.
SST 09820–63010
Torque: 39 N·m (400 kgf·cm, 29 ft·lbf)
(b) Check that SST (A) is secured to the rotor shaft.

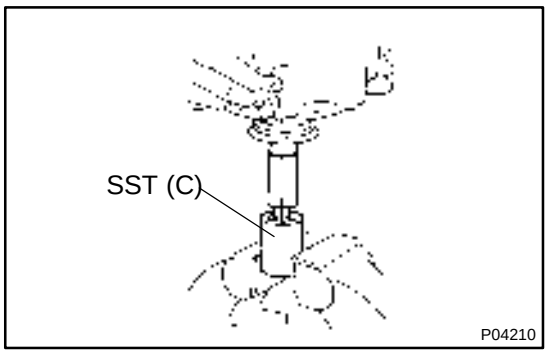

(c) Mount SST (C) in a vise.
(d) Insert SST (B) into SST (C), and attach the pulley nut to SST (C).

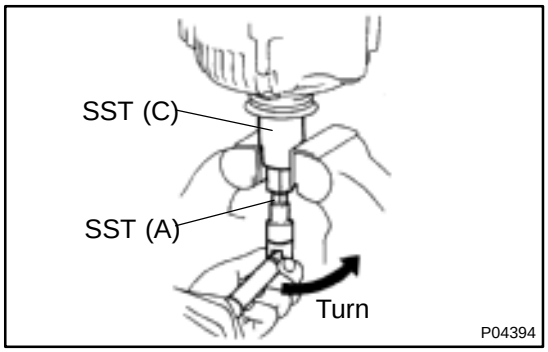

(e) To loosen the pulley nut, turn SST (A) in the direction shown in the illustration.

NOTICE:
To prevent damage to the rotor shaft, do not loosen the pulley nut more than one–half of a turn.

(f) Remove the generator from SST (C).

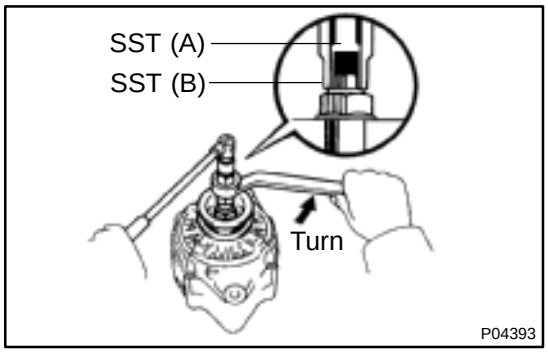

(g) Turn SST (B), and remove SST (A and B).
(h) Remove the pulley nut and pulley.

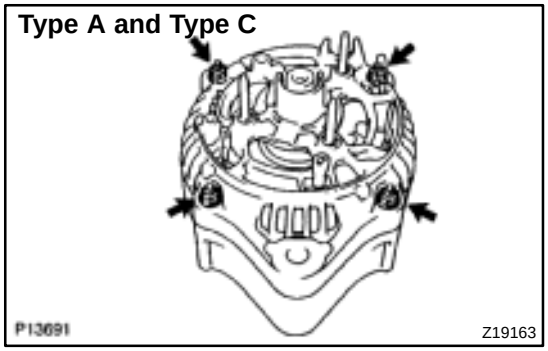

7. REMOVE RECTIFIER END FRAME

(a) Type A and Type B:
Remove the 4 nuts.

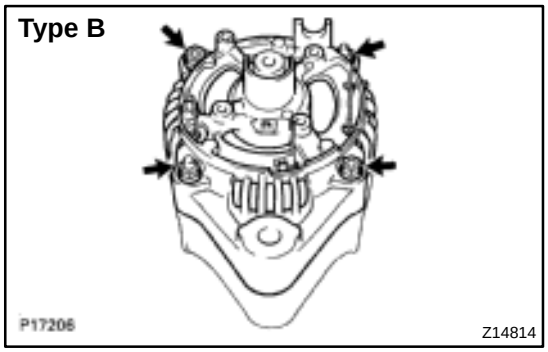

(b) Type B:
Remove the 2 nuts, 2 bolts.

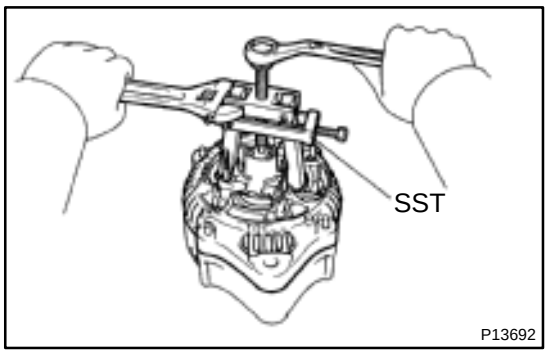

(c) Using SST, remove the rectifier end frame.
SST 09286–46011

(d) Remove the generator washer from the rotor.

8. REMOVE ROTOR FROM DRIVE END FRAME

CH06A–04

INSPECTION

1. INSPECT ROTOR

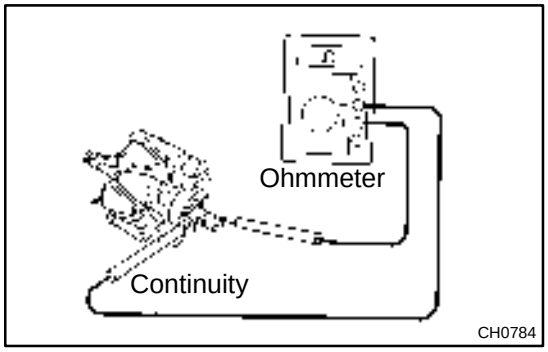

(a) Check the rotor for open circuit.
Using an ohmmeter, check that there is continuity between the slip rings.

Type A:	2.1 – 2.5 Ω at 20˚C (68˚F)
Type B:	2.7 – 3.1 Ω at 20˚C (68˚F)
Type C:	2.7 – 3.1 Ω at 20˚C (68˚F)

If there is no continuity, replace the rotor.

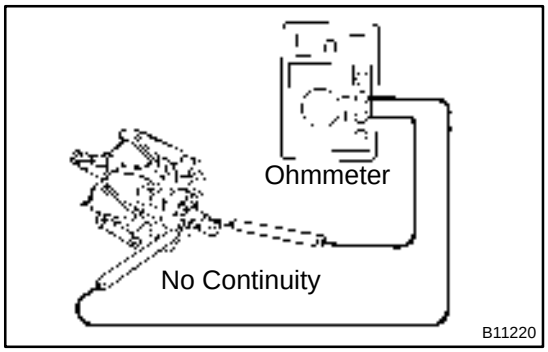

(b) Check the rotor for ground.
Using an ohmmeter, check that there is no continuity between the slip ring and rotor.

If there is continuity, replace the rotor.

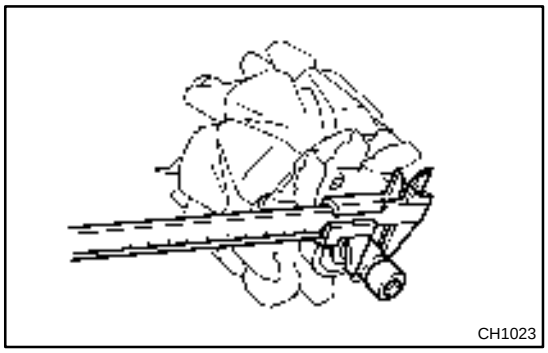

(c) Check that the slip rings are not rough or scored.

If rough or scored, replace the rotor.

(d) Using vernier calipers, measure the slip ring diameter.
Standard diameter: 14.2 – 14.4 mm (0.559 – 0.567 in.)
Minimum diameter: 12.8 mm (0.504 in.)

If the diameter is less than minimum, replace the rotor.

2. INSPECT STATOR (DRIVE END FRAME)

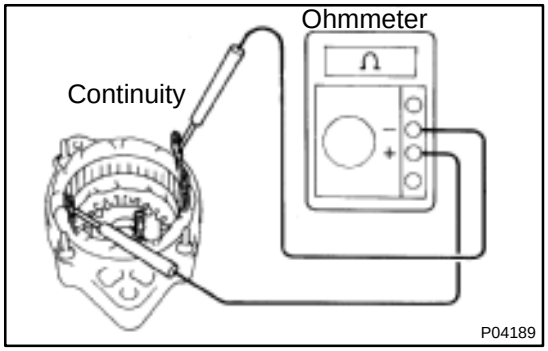

(a) Check the stator for open circuit.
Using an ohmmeter, check that there is continuity between the coil leads.

If there is no continuity, replace the drive end frame assembly.

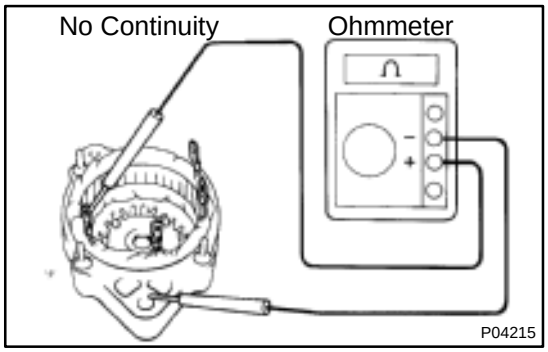

(b) Check the stator for ground.
Using an ohmmeter, check that there is no continuity between the coil lead and drive end frame.

If there is continuity, replace the drive end frame assembly.

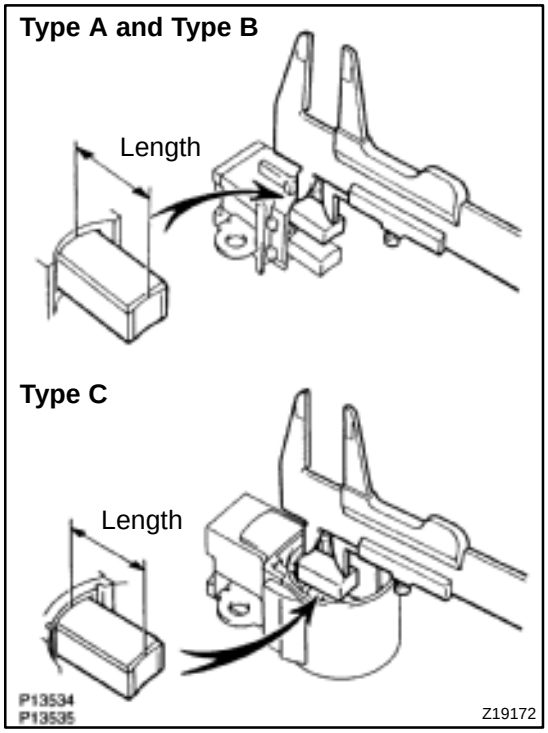

3. INSPECT BRUSHES

Using vernier calipers, measure the exposed brush length.

Standard exposed length:
9.5 – 11.5 mm (0.374 – 0.453 in.)
Minimum exposed length:
1.5 mm (0.059 in.)

If the exposed length is less than minimum, replace the brushes (Type A and Type B) or brush holder assembly (Type C).

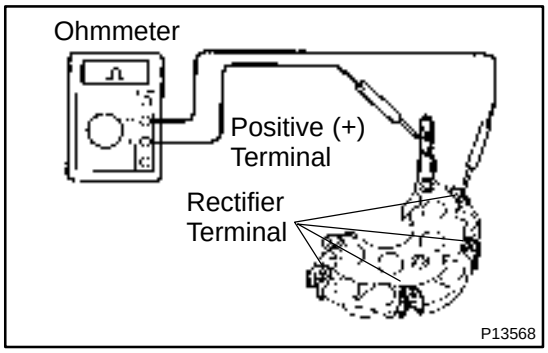

4. INSPECT RECTIFIERS (RECTIFIRE HOLDER)

(a) Check the positive (+) rectifire.
  (1) Using an ohmmeter, connect one tester probe to the positive (+) terminal and the other to each rectifier terminal.
  (2) Reverse the polarity of the tester probes and repeat step (a).
  (3) Check that one shows continuity and the other shows no continuity.

If continuity is not as specified, replace the rectifier holder.

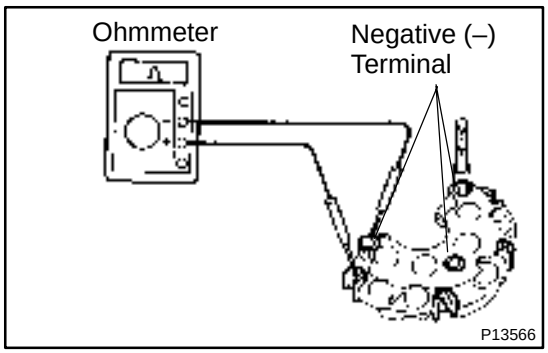

(b) Check the negative (–) rectifire.
  (1) Using an ohmmeter, connect one tester probe to each negative (–) terminal and the other to each rectifier terminal.
  (2) Reverse the polarity of the tester probes and repeat step (a).
  (3) Check that one shows continuity and the other shows no continuity.

If continuity is not as specified, replace the rectifier holder.

5. INSPECT BEARING

Check the bearing is not rough or worn.

If necessary, replace the bearing. (See page CH–15)

CH06D–01

INSTALLATION

Installation is in the reverse order of removal. (See page CH–8)

CH06C–01

REASSEMBLY

1. PLACE RECTIFIER END FRAME ON PULLEY

2. INSTALL ROTOR TO DRIVE END FRAME

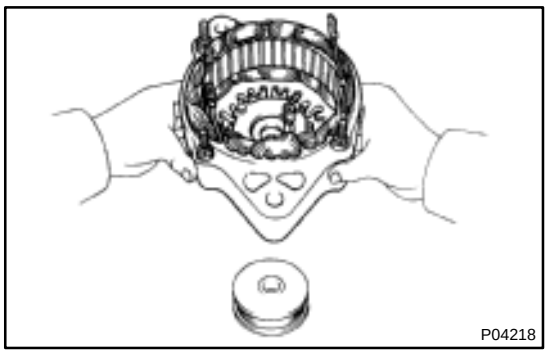

3. INSTALL RECTIFIER END FRAME

(a) Place the generator washer on the rotor.

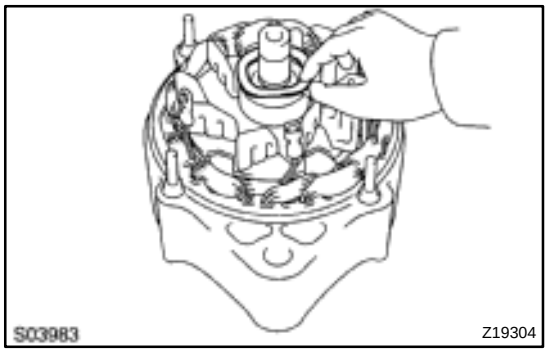

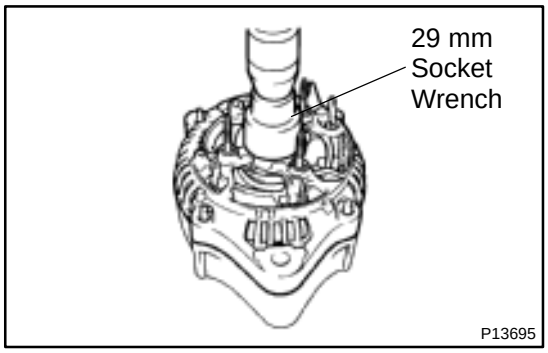

(b) Using a 29 mm socket wrench and press, slowly press in the rectifier end frame.

(c) Type A and Type C:
Install the 4 nuts.
Torque: 4.5 N·m (46 kgf·cm, 40 in.·lbf)

(d) Type B:
Install the 2 nuts and 2 bolts.
Torque: 4.5 N·m (46 kgf·cm, 40 in.·lbf)

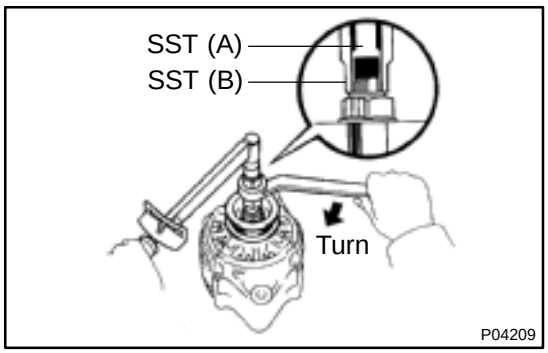

4. INSTALL PULLEY

(a) Install the pulley to the rotor shaft by tightening the pulley nut by hand.

(b) Hold SST (A) with a torque wrench, and tighten SST (B) clockwise to the specified torque.
SST 09820–63010
Torque: 39 N·m (400 kgf·cm, 29 ft·lbf)

(c) Check that SST (A) is secured to the pulley shaft.

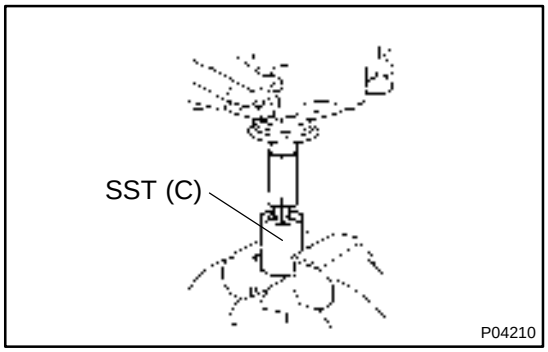

(d) Mount SST (C) in a vise.

(e) Insert SST (B) into SST (C), and attach the pulley nut to SST (C).

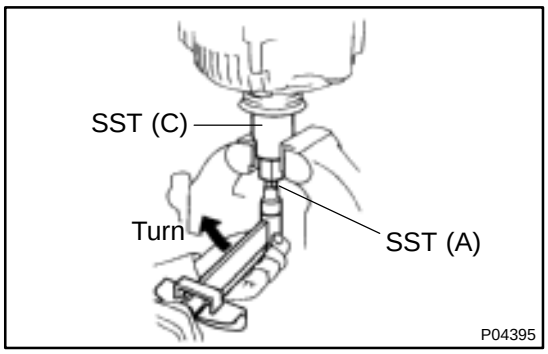

(f) To torque the pulley nut, turn SST (A) in the direction shown in the illustration.
Torque: 110.5 N·m (1,125 kgf·cm, 81 ft·lbf)

(g) Remove the generator from SST (C).

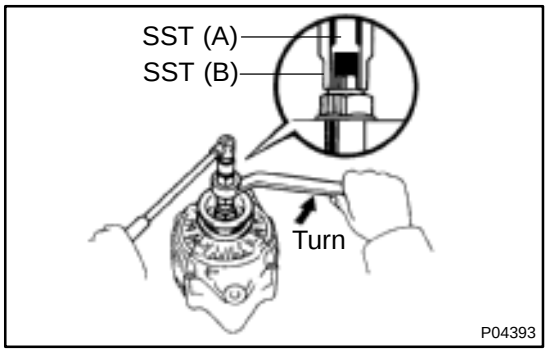

(h) Turn SST (B), and remove SST (A and B).

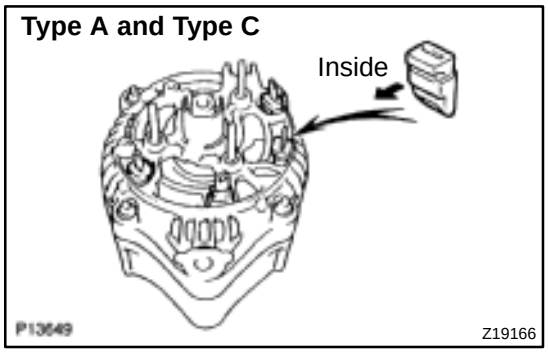

5. Type A and Type C:
INSTALL RECTIFIER HOLDER

(a) Install the 4 rubber insulators on the lead wires.

NOTICE:
Be careful of the rubber insulators installation direction.

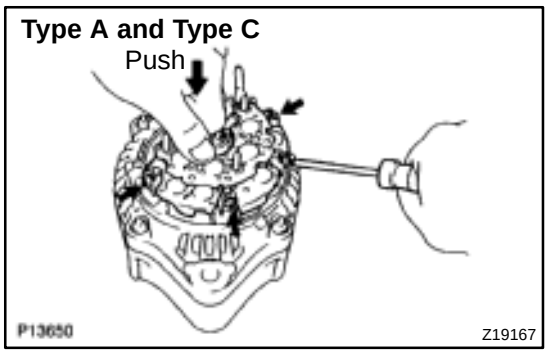

(b) Install the rectifier holder while pushing it with the 4 screws.
Torque: 1.96 N·m (20 kgf·cm, 17 in.·lbf)

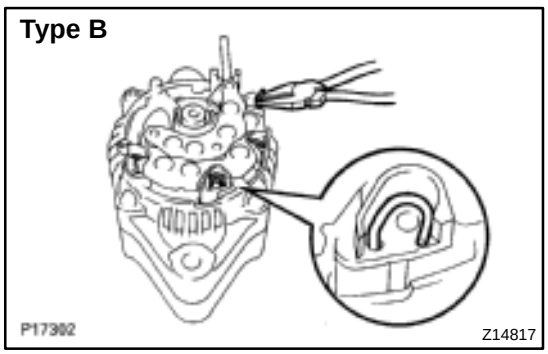

6. Type B:
INSTALL RECTIFIER HOLDER

(a) Install the rectifier holder.

(b) Bend the 4 stator lead wires as shown in the illustration.

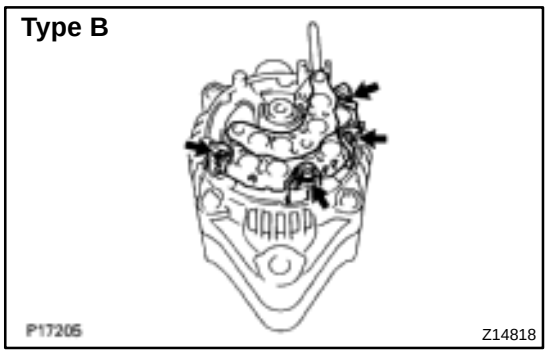

(c) Install the 4 screws.
Torque: 1.96 N·m (20 kgf·cm, 17 in.·lbf)

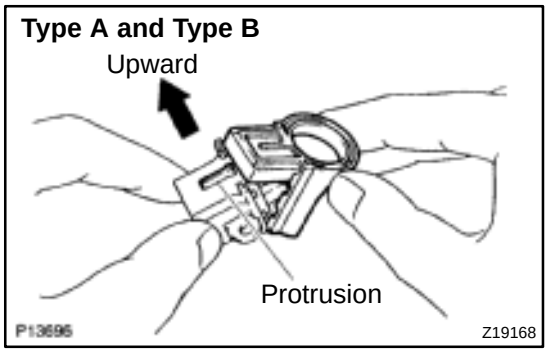

7. Type A and Type B:
INSTALL VOLTAGE REGULATOR AND BRUSH HOLDER

(a) Install the brush holder cover to the brush holder.

NOTICE:
Be careful of the holder installation direction.

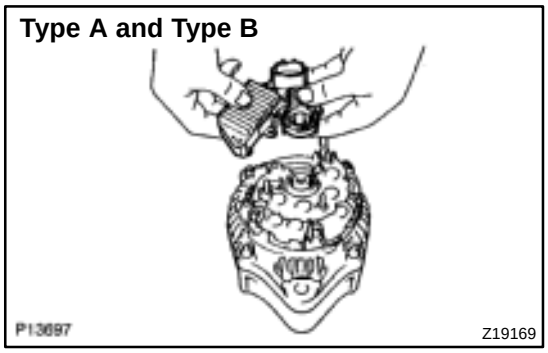

(b) Place the voltage regulator together with the brush holder horizontally on the rectifier end frame.

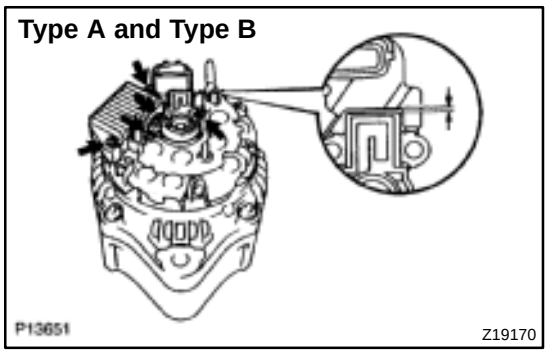

(c) Install the 5 screws until there is a clearance of approx. 1.1 mm (0.04 in.) between the brush holder and voltage regulator.

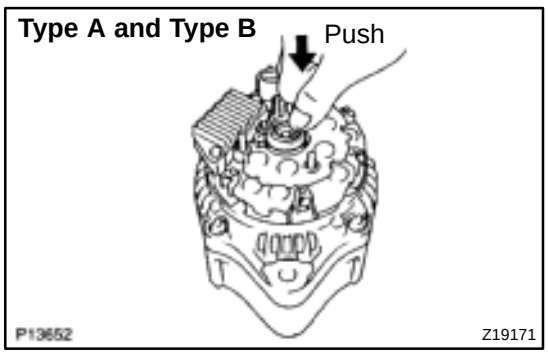

(d) Fit the brush holder cover.

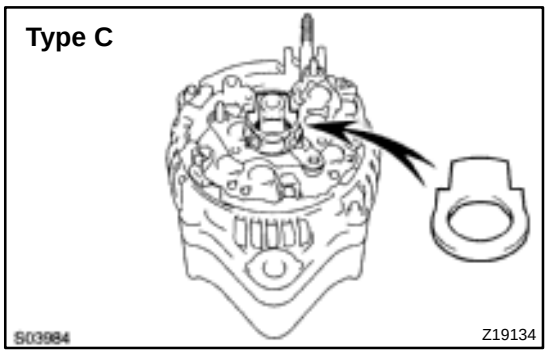

8. Type C:
INSTALL VOLTAGE REGULATOR AND BRUSH HOLDER

(a) Place the seal plate on the rectifier end frame.

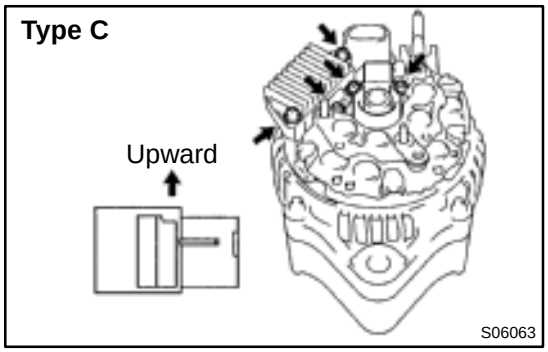

(b) Place the voltage regulator and brush holder on the rectifier end frame.

NOTICE:
Be careful of the brush holder installation direction.

(c) Install the 5 screws.
Torque: 2.0 N·m (20 kgf·cm, 17in.·lbf)

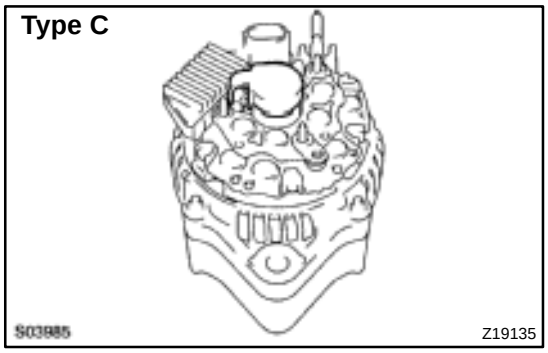

(d) Place the brush holder cover on the brush holder.

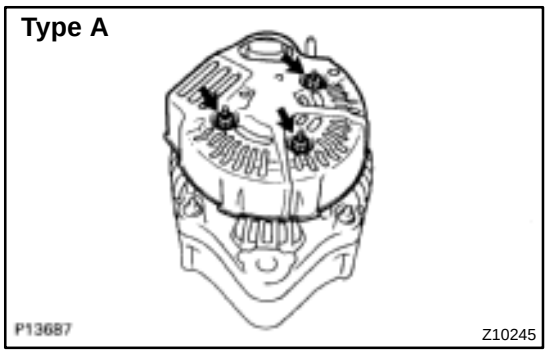

9. INSTALL REAR END COVER

(a) Type A:
Install the end cover with the 3 nuts.
Torque: 4.4 N·m (45 kgf·cm, 40 in.·lbf)

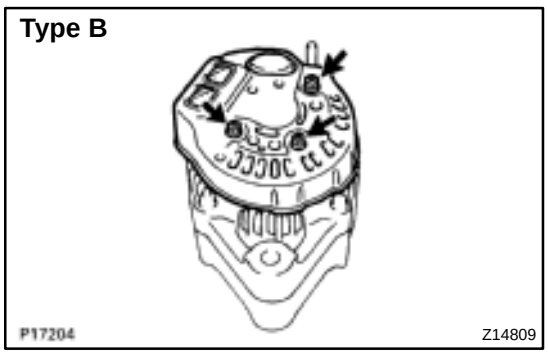

(b) Type B:
Install the end cover with the 3 bolts.
Torque: 2.6 N·m (27 kgf·cm, 23 in.·lbf)

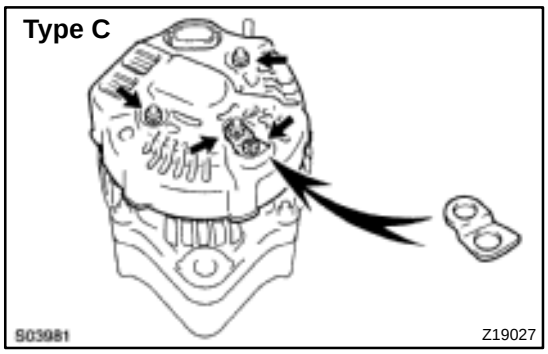

(c) Type C:
Install the end cover and plate terminal with the bolt and 3 nuts.
Torque:
nut: 4.5 N·m (46 kgf·cm, 41 in.·lbf)
bolt: 3.8 N·m (39 kgf·cm, 34 in.·lbf)

(d) Install the terminal insulator with the nut.
Torque: 4.1 N·m (42 kgf·cm, 36 in.·lbf)

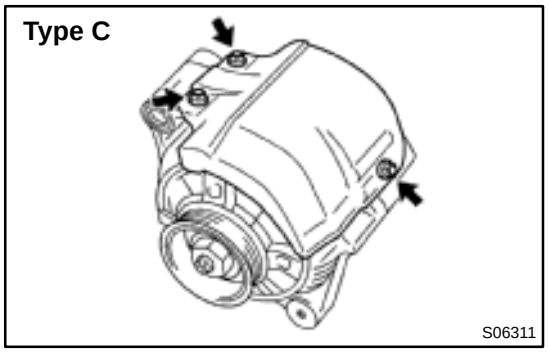

(e) Type C:
Install the end cover with the 3 bolts.
Torque: 5.4 N·m (55 kgf·cm, 47 in.·lbf)

10. CHECK THAT ROTOR ROTATES SMOOTHLY

CH068–03

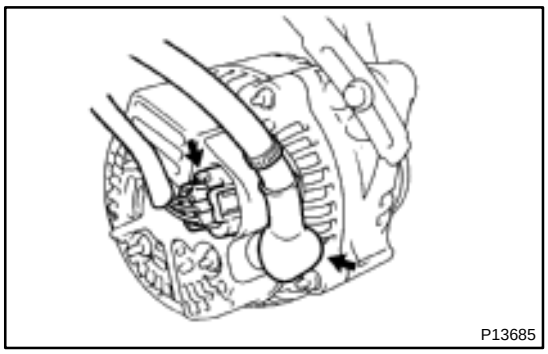

REMOVAL

1. DISCONNECT CONNECTOR AND WIRE FROM GENERATOR

(a) Disconnect the connector from the generator.

(b) Remove the connector cover and nut, and disconnect the wire from the generator.

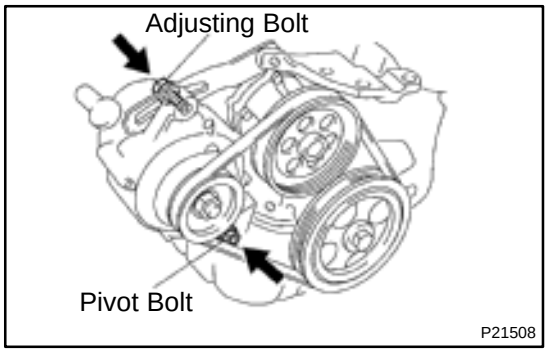

2. REMOVE DRIVE BELT

Loosen the pivot bolt and adjusting bolt, and remove the drive belt.

Torque:
Pivot bolt: 58 N·m (580 kgf·cm, 41 ft·lbf)
Adjusting bolt: 12 N·m (120 kgf·cm, 9 ft·lbf)

3. REMOVE GENERATOR

(a) Remove the pivot bolt, nut and adjusting bolt.

(b) Remove the generator.

CH06B–01

REPLACEMENT

1. Type A and Type B:
REPLACE BRUSHES

(a) Unsolder and remove the brush and spring.

(b) Run the wire of a new brush through the spring and the hole in the brush holder, and insert the spring and brush into the brush holder.

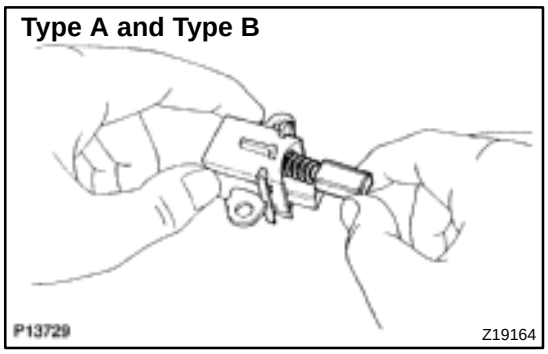

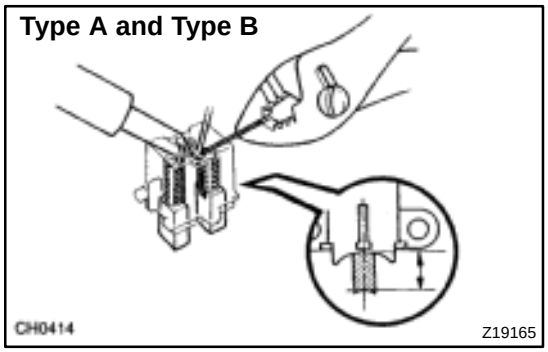

(c) Solder the brush wire to the brush holder at the specified exposed length.
Exposed length:
9.5 – 11.5 mm (0.374 – 0.453 in.)

(d) Check that the brush moves smoothly in the brush holder.

(e) Cut off the excess wire.

(f) Apply insulation paint to the soldered area.

2. REPLACE FRONT BEARING

(a) Remove the 4 screws, bearing retainer and bearing.

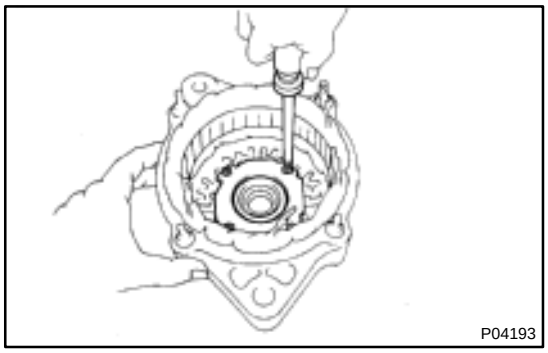

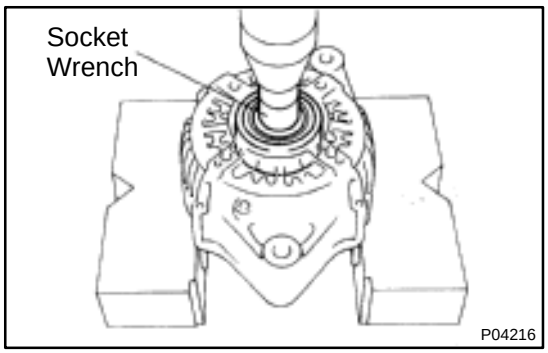

(b) Using a socket wrench and press, press out the bearing.

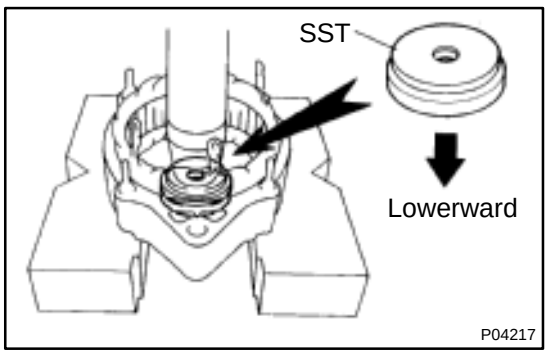

(c) Using SST and a press, press in a new bearing.
SST 09950–60010 (09951–00460)

(d) Install the bearing retainer with the 4 screws.
Torque: 2.6 N·m (27 kgf·cm, 23 in.·lbf)

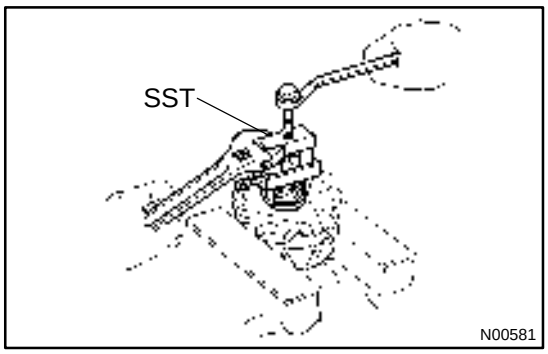

3. REPLACE REAR BEARING

(a) Using SST, remove the bearing cover (outside) and bearing.
SST 09820–00021

NOTICE:
Be careful not to damage the fan.

(b) Remove the bearing cover (inside).

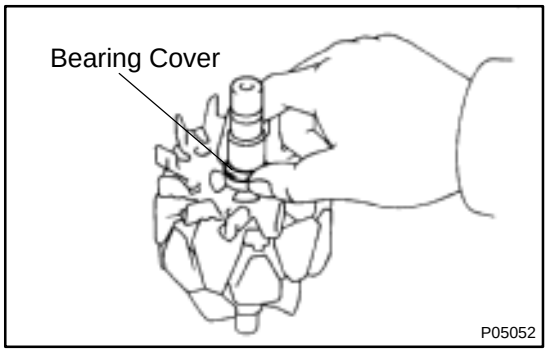

(c) Place the bearing cover (inside) on the rotor.

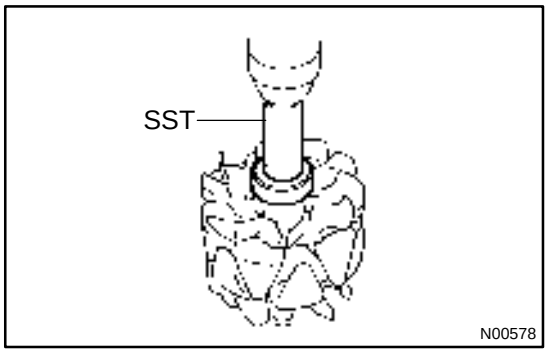

(d) Using SST and a press, press in a new bearing.
SST 09820–00030

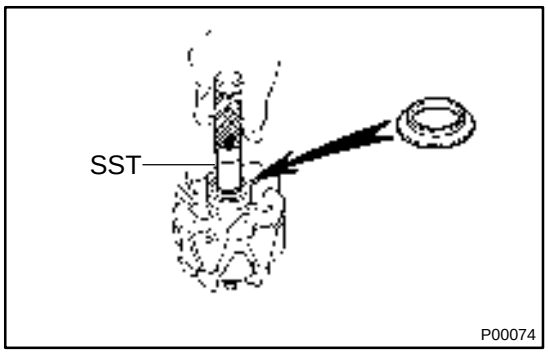

(e) Using SST, push in the bearing cover (outside).
SST 09285–76010

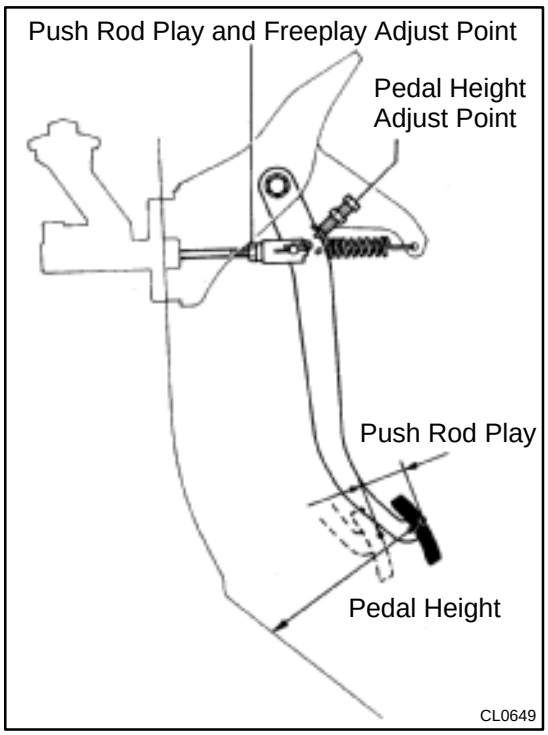

CLUTCH PEDAL

CL058–02

INSPECTION

1. CHECK THAT PEDAL HEIGHT IS CORRECT

Pedal height from dash panel:
151.0–161.0 mm (5.944–6.338 in.)

2. IF NECESSARY, ADJUST PEDAL HEIGHT

Loosen the lock nut and turn the stopper bolt until the height is correct. Tighten the lock nut.

3. CHECK PEDAL FREEPLAY AND PUSH ROD PLAY

Depress the pedal until the clutch resistance begins to be felt.

Pedal freeplay: 1.0–5.0 mm (0.039–0.197 in.)

Gently push on the pedal until the resistance begins to increase.

Push rod play at pedal top:
5.0–15.0 mm (0.197–0.591 in.)

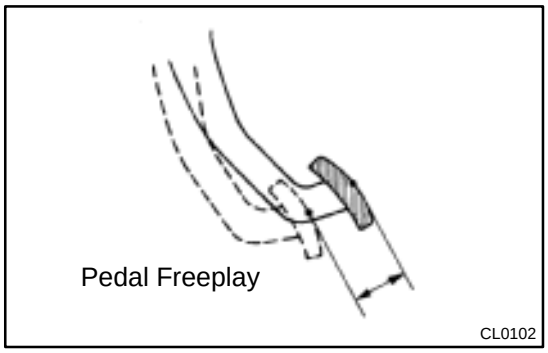

4. IF NECESSARY, ADJUST PEDAL FREEPLAY AND PUSH ROD PLAY

(a) Loosen the lock nut and turn the push rod until the freeplay and push rod play are correct.
(b) Tighten the lock nut.
(c) After adjusting the pedal freeplay, check the pedal height.
(d) Connect the air duct and install the lower finish panel.

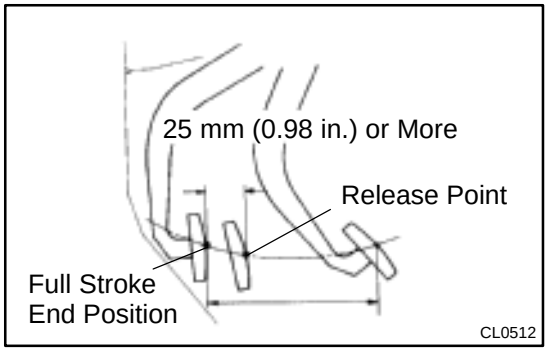

5. CHECK CLUTCH RELEASE POINT

(a) Pull the parking brake lever and install wheel stopper.
(b) Start and idle the engine.
(c) Without depressing the clutch pedal, slowly shift the shift lever into reverse position until the gears contact.
(d) Gradually depress the clutch pedal and measure the stroke distance from the point that the gear noise stops (release point) up to the full stroke end position.

Standard distance:
25 mm (0.984 in.) or more
(From pedal stroke end position to release point)

If the distance is not as specified, perform the following operations.

- Inspect pedal height.
- Inspect push rod play and pedal freeplay.
- Bleed the clutch line.
- Inspect the clutch cover and disc.

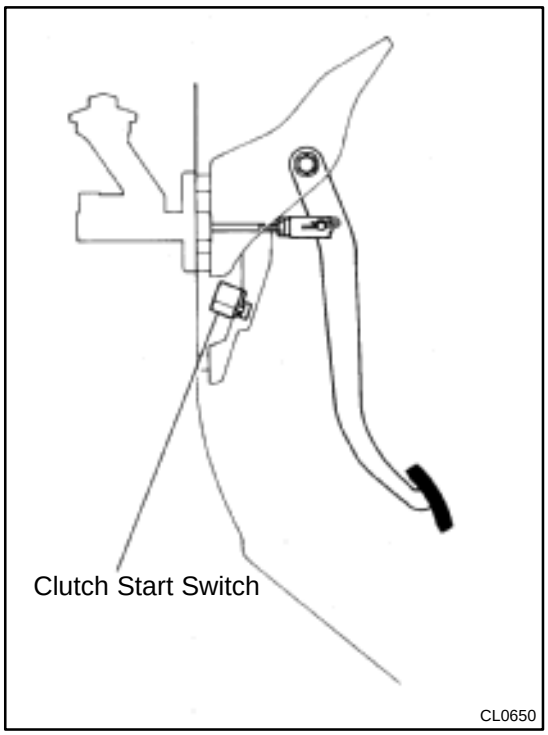

6. CHECK CLUTCH START SYSTEM

(a) Check that the engine does not start when the clutch pedal is released.

(b) Check that the engine starts when the clutch pedal is fully depressed.

If necessary, replace the clutch start switch.

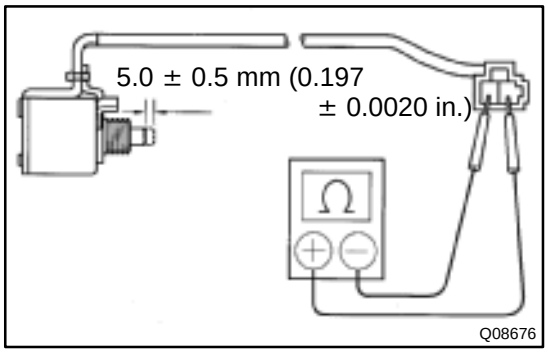

7. INSPECT CLUTCH START SWITCH CONTINUITY

Check the continuity between terminals when the switch is ON and OFF.

Switch position	Condition
ON (pushed)	Continuity
OFF (free)	No continuity

If continuity is not as specified, replace the switch.

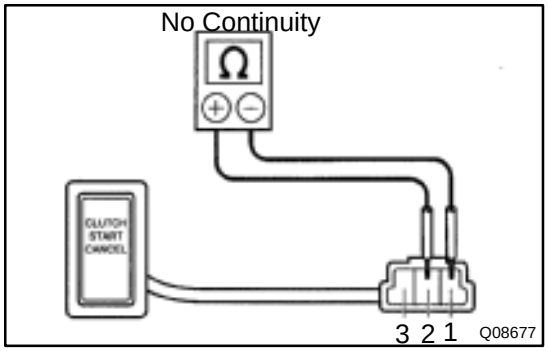

8. CHECK CONTINUITY OF CLUTCH START CANCEL SWITCH

(a) Check that no continuity exists when connecting the positive (+) lead from the ohmmeter to terminal 2 and the negative (–) lead to terminal 1.

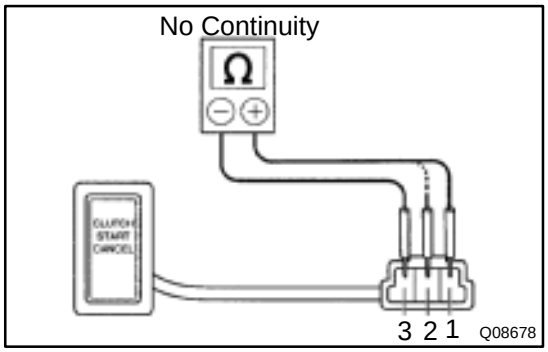

(b) Check that no continuity exists when connecting the positive (+) lead from the ohmmeter to terminal 3 and the negative (–) lead to terminal 1.

(c) Check no continuity exists between terminals 2 and 3.

If continuity is not as specified, replace the clutch start cancel switch.

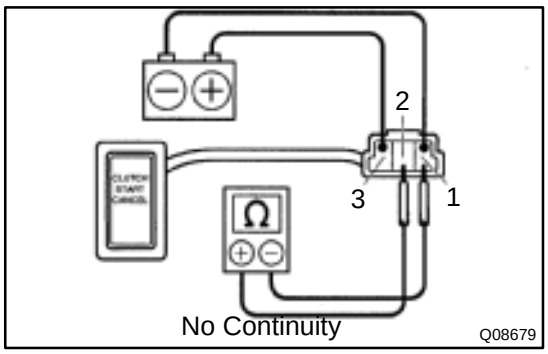

9. CHECK OPERATION OF CLUTCH START CANCEL SWITCH

(a) Connect positive (+) lead from the battery to terminal 3 and connect negative (–) lead to terminal 1.

(b) Check that no continuity exists when connecting the positive (+) lead from the ohmmeter to terminal 2 and the negative (–) lead to terminal 1.

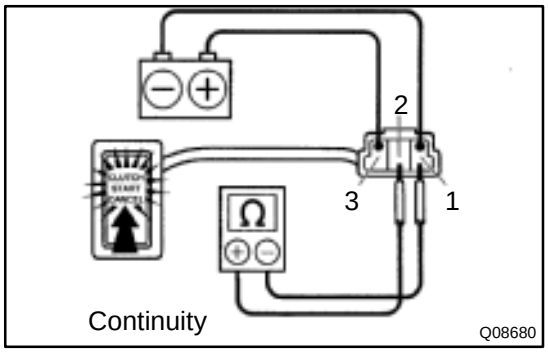

(c) When pushing the switch and check that the indicator light comes on and continuity exists between terminal 1 and 2.

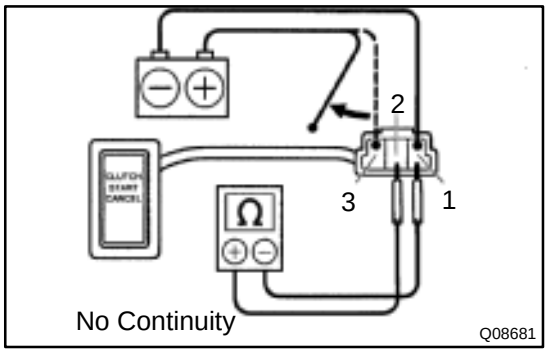

(d) Check that no continuity exists between terminals 1 and 2 when disconnecting the battery lead.

If continuity is not as specified, replace the clutch start cancel switch.

CLUTCH UNIT

CL05J–03

COMPONENTS

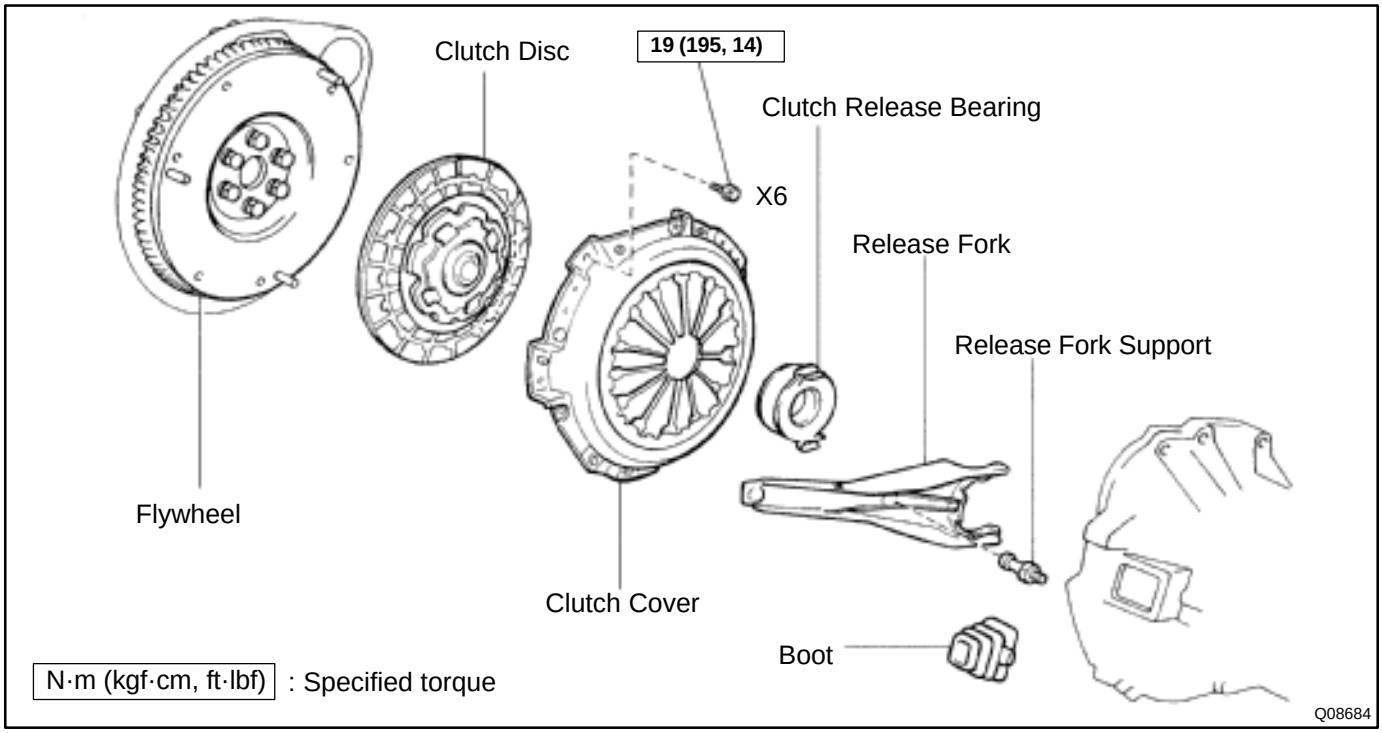

CL05L–02

INSPECTION

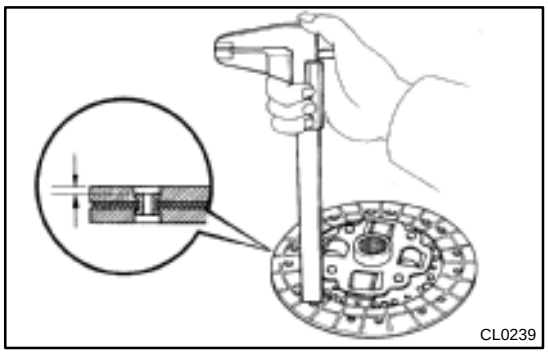

1. INSPECT CLUTCH DISC FOR WEAR OR DAMAGE

Using calipers, measure the rivet head depth.

Minimum rivet depth: 0.3 mm (0.012 in.)

If necessary, replace the clutch disc.

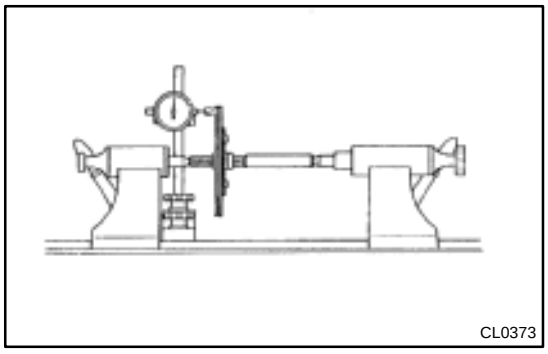

2. INSPECT CLUTCH DISC RUNOUT

Using a dial indicator, check the disc runout.

Maximum runout: 0.8 mm (0.031 in.)

If necessary, replace the clutch disc.

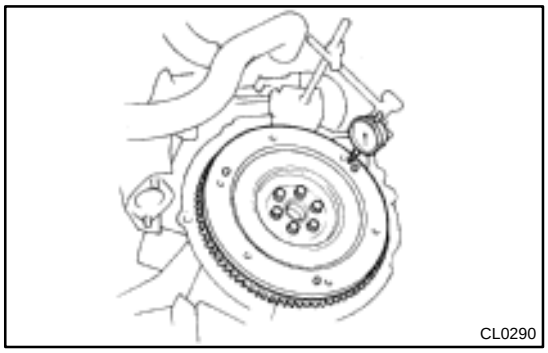

3. INSPECT FLYWHEEL RUNOUT

Using a dial indicator, check the flywheel runout.

Maximum runout: 0.1 mm (0.004 in.)

If necessary, replace the flywheel.

Torque: 90 N·m (900 kgf·cm, 65 ft·lbf)

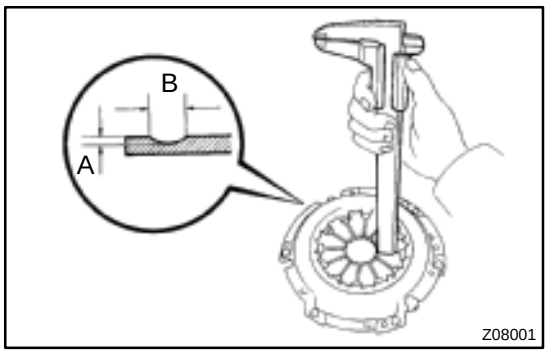

4. INSPECT DIAPHRAGM SPRING FOR WEAR

Using calipers, measure the diaphragm spring for depth and width of wear.

Maximum depth:

A: 0.6 mm (0.024 in.)

Maximum width:

B: 5.0 mm (0.197 in.)

If necessary, replace the clutch cover.

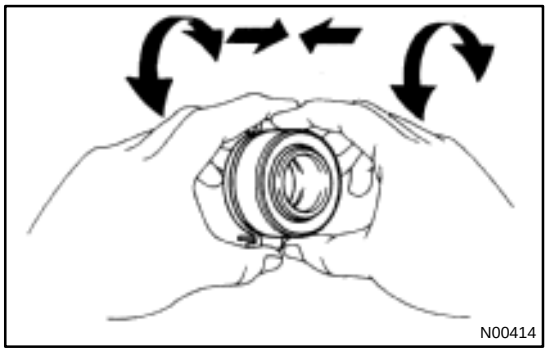

5. INSPECT RELEASE BEARING

Turn the bearing by hand while applying force in the axial direction.

HINT:

The bearing is permanently lubricated and requires no cleaning or lubrication.

If necessary, replace the release bearing.

CL05M–01

INSTALLATION

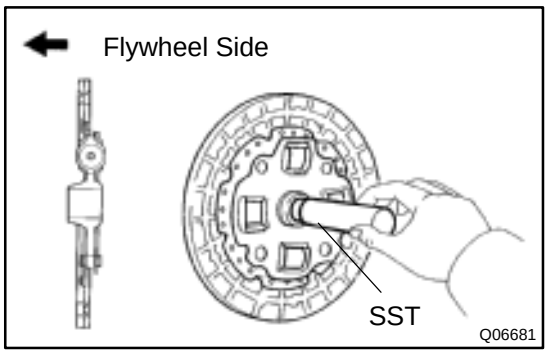

1. INSTALL CLUTCH DISC AND CLUTCH COVER ON FLYWHEEL

(a) Insert SST in the clutch disc, and then set them.
SST 09301–00210

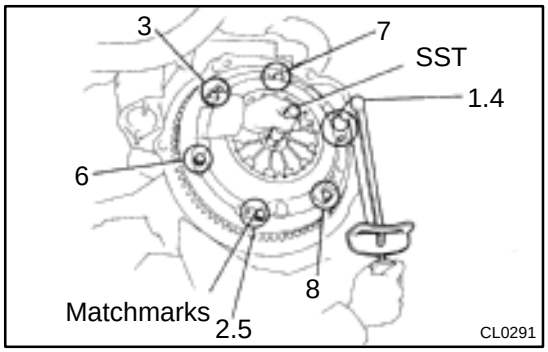

(b) Align the matchmarks on the clutch cover and flywheel.
(c) Torque the bolts on the clutch cover in the order shown.
Torque: 19 N·m (195 kgf·cm, 14 ft·lbf)

HINT:
Temporarily tighten the No.1 and No.2 bolts.

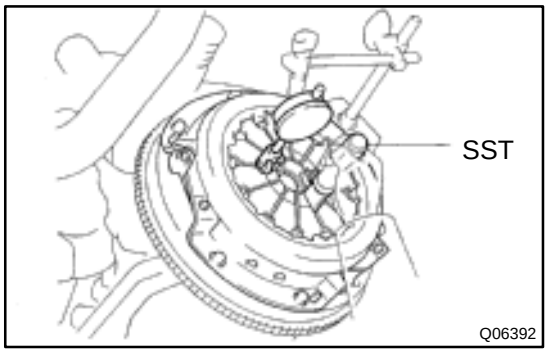

2. CHECK DIAPHRAGM SPRING TIP ALIGNMENT

Using a dial indicator with roller instrument, check the diaphragm spring tip alignment.

Maximum non–alignment: 0.5 mm (0.020 in.)

If alignment is not as specified, using SST, adjust the diaphragm spring tip alignment.
SST 09333–00013

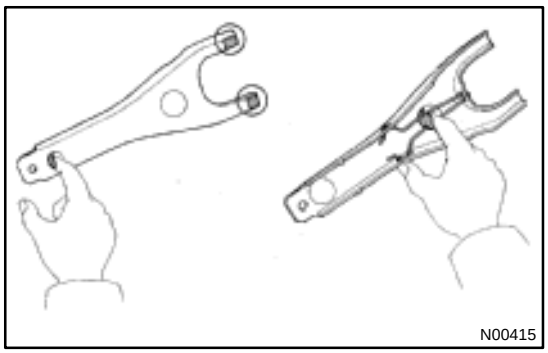

3. APPLY MOLYBDENUM DISULPHIDE LITHIUM BASE GREASE (NLGI NO.2)

(a) Apply release hub grease to these parts:
- Release fork and hub contact point
- Release fork and push rod contact point
- Release fork pivot point

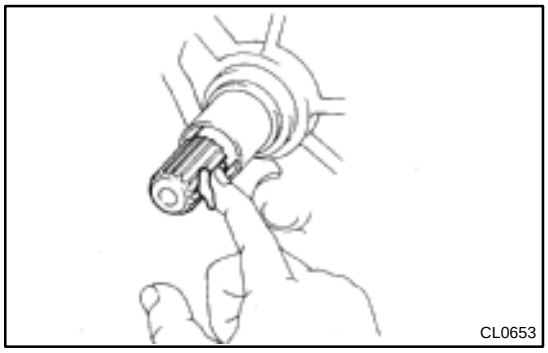

(b) Apply clutch spline grease.
- Clutch disc spline

HINT:
Recommended grease part number
08887–01706 (100 g).

4. INSTALL RELEASE BEARING AND FORK TO TRANSAXLE

Install the bearing to the release fork, and then install them to the transaxle.

5. INSTALL TRANSAXLE TO ENGINE
(See page MX–6)

CL05K–01

REMOVAL

1. REMOVE TRANSAXLE FROM ENGINE
(See page MX–3)

2. REMOVE CLUTCH COVER AND DISC

(a) Place matchmarks on the flywheel and clutch cover.

(b) Loosen each set bolt one turn at a time until spring tension is released.

(c) Remove the set bolts, and pull off the clutch cover with the clutch disc.

NOTICE:
Do not drop the clutch disc.

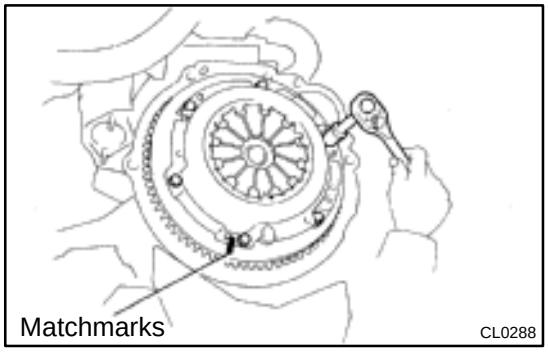

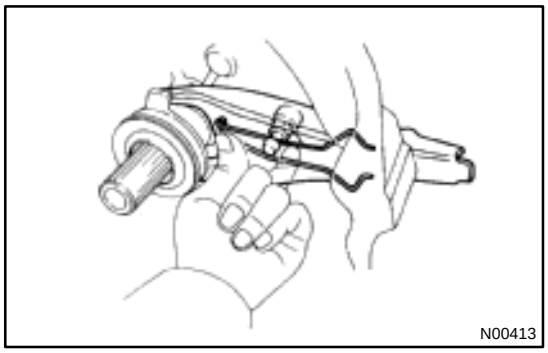

3. REMOVE RELEASE BEARING AND FORK FROM TRANSAXLE

Remove the release bearing together with the fork and then separate them.

CLUTCH MASTER CYLINDER

COMPONENTS

CL059–01

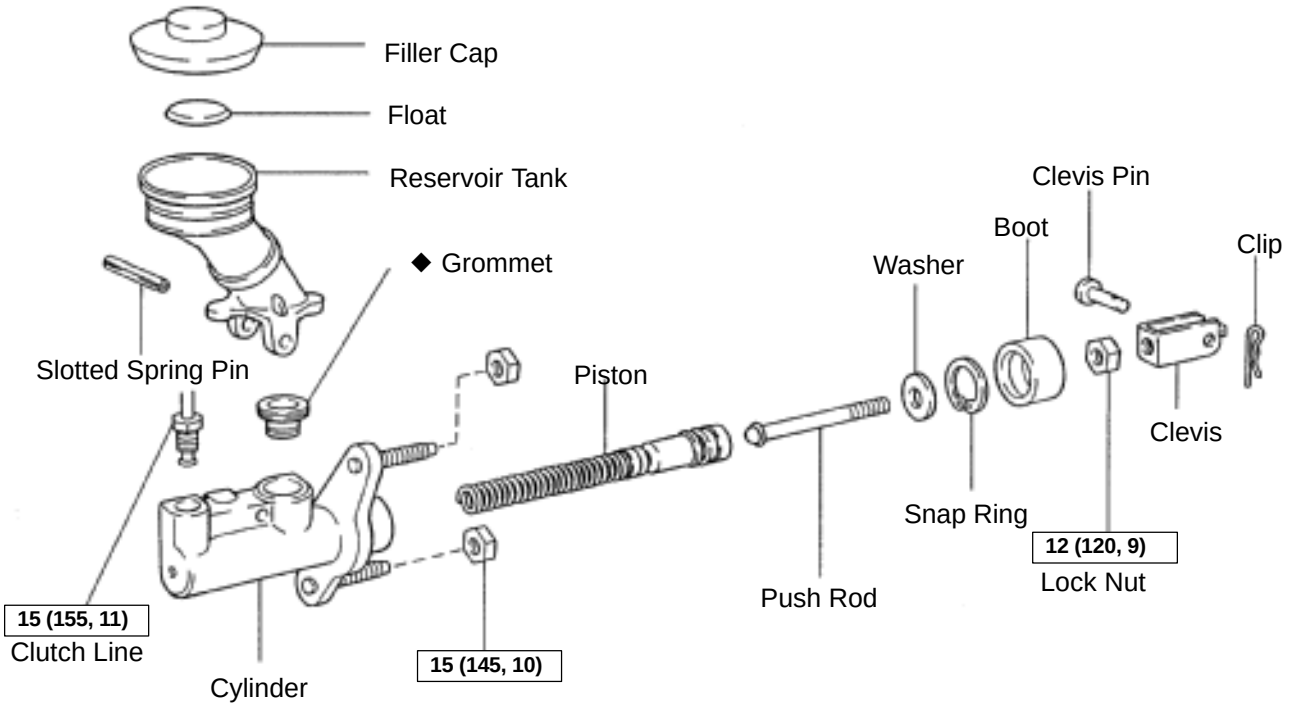

N·m (kgf·cm, ft·lbf) : Specified torque

◆ Non–reusable part

Q08682

CL05B–01

DISASSEMBLY

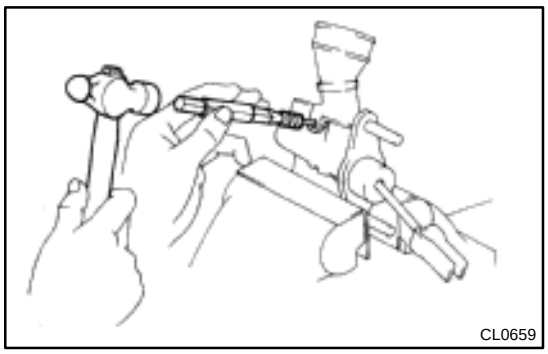
CL0659

1. REMOVE RESERVOIR TANK

(a) Using a pin punch and hammer, drive out the slotted spring pin.

(b) Remove the reservoir tank and grommet.

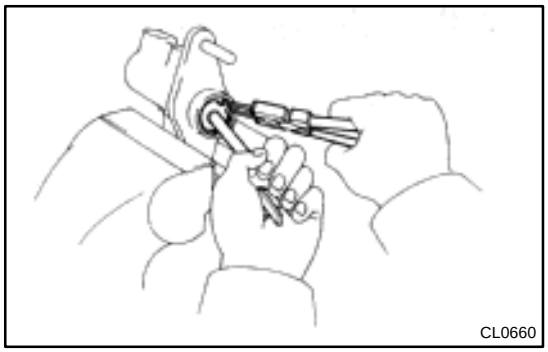
CL0660

2. REMOVE PUSH ROD

Pull back the boot, and using snap ring pliers, remove the snap ring.

3. REMOVE PISTON

CL05D–01

INSTALLATION

Installation is in the reverse order of removal (See page CL–6).

HINT:

After installation, bleed system and adjust clutch pedal.

CL05C–03

REASSEMBLY

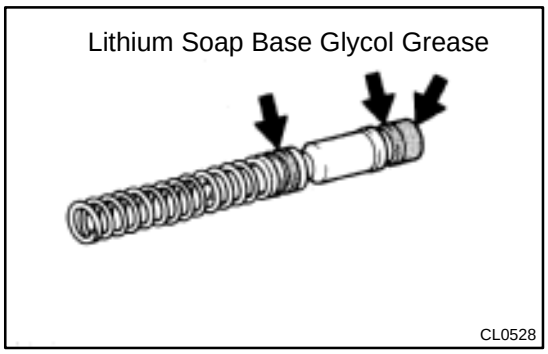

1. COAT PARTS WITH LITHIUM SOAP BASE GLYCOL GREASE, AS SHOWN

2. INSERT PISTON INTO CYLINDER

3. INSTALL PUSH ROD ASSEMBLY WITH SNAP RING

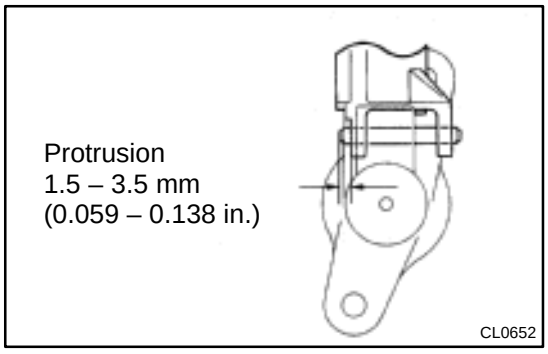

4. INSTALL RESERVOIR TANK

(a) Install the reservoir tank and a new grommet.

(b) Using a pin punch and hammer, drive in the slotted spring pin.

CL05A–01

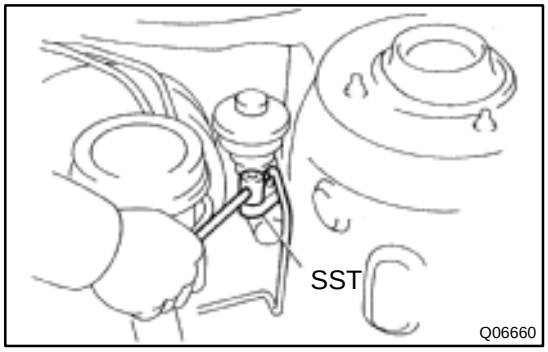

REMOVAL

1. DRAW OUT FLUID WITH SYRINGE

2. DISCONNECT CLUTCH LINE

Using SST, disconnect the line. Use a container to catch the fluid.

SST 09023–00100

Torque: 15 N·m (155 kgf·cm, 11 ft·lbf)

3. REMOVE CLIP AND CLEVIS PIN

4. REMOVE 2 MOUNTING NUTS AND PULL OUT MASTER CYLINDER

Torque: 12 N·m (120 kgf·cm, 9 ft·lbf)

CLUTCH RELEASE CYLINDER

COMPONENTS

CL05E–01

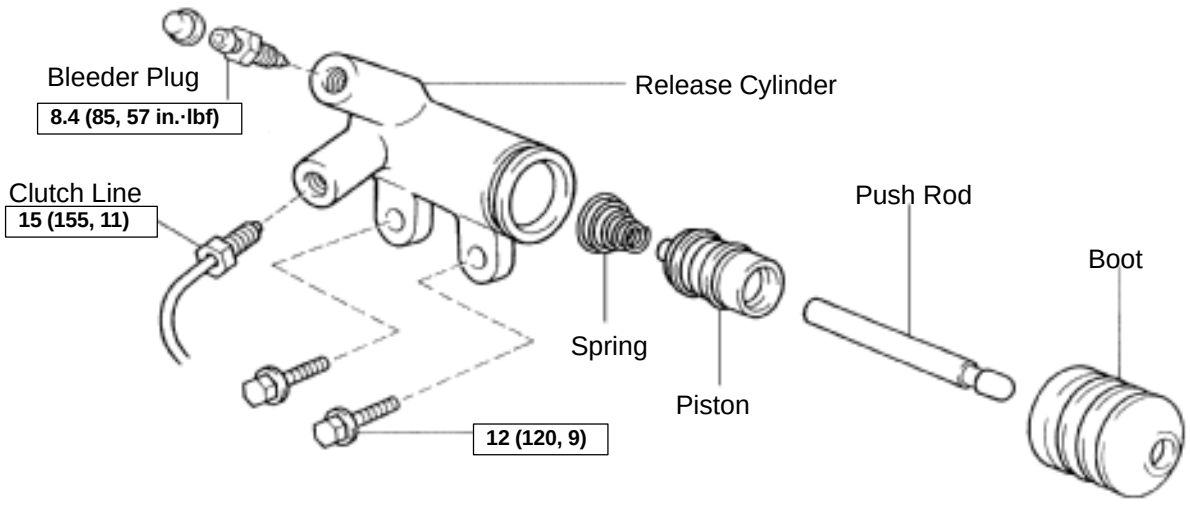

N·m (kgf·cm, ft·lbf) : Specified torque

Q08683

CL05G–01

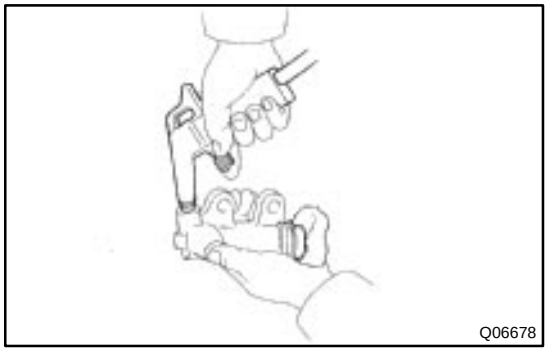

DISASSEMBLY

1. PULL OUT BOOT WITH PUSH ROD

2. REMOVE PISTON

Using compressed air, remove the piston with the spring from the cylinder.

CL05I–01

INSTALLATION

Installation is in the reverse order of removal (See page CL–11).

HINT:

After installation, bleed clutch system.

CL05H–03

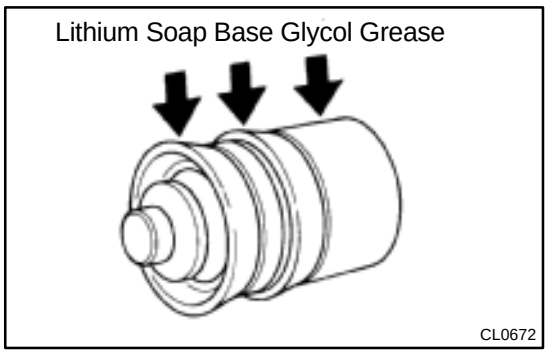

REASSEMBLY

1. **COAT PISTON WITH LITHIUM SOAP BASE GLYCOL GREASE, AS SHOWN**
2. **INSTALL PISTON WITH SPRING INTO CYLINDER**
3. **INSTALL BOOT WITH PUSH ROD TO CYLINDER**

CL05F–01

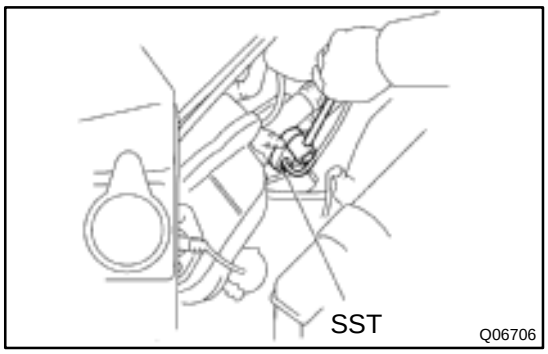

REMOVAL

1. DISCONNECT CLUTCH LINE

Using SST, disconnect the line. Use a container to catch the fluid.

SST 09023–00100

Torque: 15 N·m (155 kgf·cm, 11 ft·lbf)

2. REMOVE 2 BOLTS AND PULL OUT RELEASE CYLINDER

Torque: 12 N·m (120 kgf·cm, 9 ft·lbf)

TROUBLESHOOTING

CL057–01

PROBLEM SYMPTOMS TABLE

Use the table below to help you find the cause of the problem. The numbers indicate the priority of the likely cause of the problem. Check each part in order. If necessary, replace these parts.

Symptom	Suspect Area	See page
Clutch grabs/chatters	1. Engine mounting (Loosen)	–
	2. Clutch disc (Runout is excessive)	CL–15
	3. Clutch disc (Oily)	CL–15
	4. Clutch disc (Worn out)	CL–15
	5. Clutch disc torsion rubber (Damaged)	CL–15
	6. Clutch disc (Glazed)	CL–15
	7. Diaphragm spring (Out of tip alignment)	CL–15
Clutch pedal spongy	1. Clutch line (Air in line)	–
	2. Master cylinder cup (Damaged)	CL–5
	3. Release cylinder cup (Damaged)	CL–10
Clutch noisy	1. Release bearing (Worn, dirty, or damaged)	CL–15
	2. Clutch disc torsion rubber (Damaged)	CL–15
Clutch slips	1. Clutch pedal (Free play out of adjustment)	CL–2
	2. Clutch disc (Oily)	CL–15
	3. Clutch disc (Worn out)	CL–15
	4. Diaphragm spring (Damaged)	CL–15
	5. Pressure plate (Distortion)	CL–15
	6. Flywheel (Distortion)	–
Clutch does not disengage	1. Clutch pedal (Free play out of adjustment)	CL–2
	2. Clutch line (Air in line)	–
	3. Master cylinder cup (Damaged)	CL–5
	4. Release cylinder cup (Damaged)	CL–10
	5. Clutch disc (Out of true)	CL–15
	6 Clutch disc (Runout is excessive)	CL–15
	7. Clutch disc (Lining broken)	CL–15
	8. Clutch disc (Dirty or burned)	CL–15
	9. Clutch disc (Oily)	CL–15
	10. Clutch disc (Lack of spline grease)	CL–18
	11. Diaphragm spring (Damaged)	CL–15
	12. Diaphragm spring (Out of tip alignment)	CL–18
	13. Pressure plate (Distortion)	CL–15

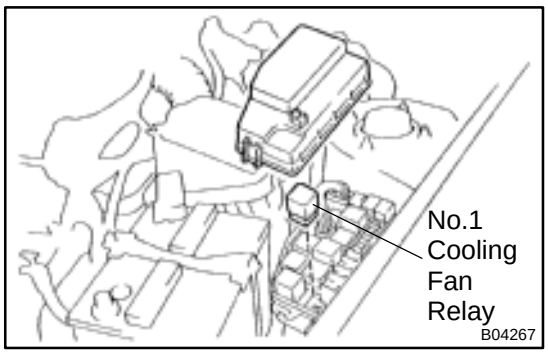

COOLING FAN RELAY

CO0HO–02

INSPECTION

1. INSPECT NO.1 COOLING FAN RELAY

(a) Remove the relay box cover.

(b) Remove the No.1 cooling fan relay. (Marking: FAN)

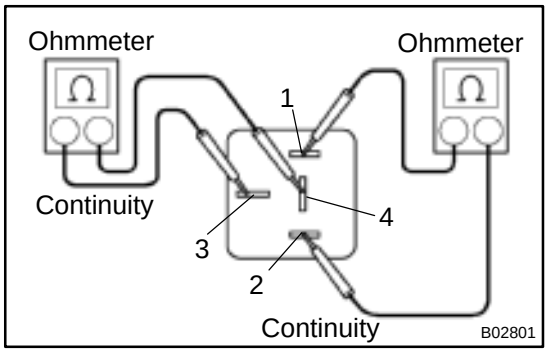

(c) Inspect the No.1 cooling fan relay continuity.

(1) Using an ohmmeter, check that there is continuity between terminals 1 and 2.

If there is no continuity, replace the relay.

(2) Check that there is continuity between terminals 3 and 4.

If there is no continuity, replace the relay.

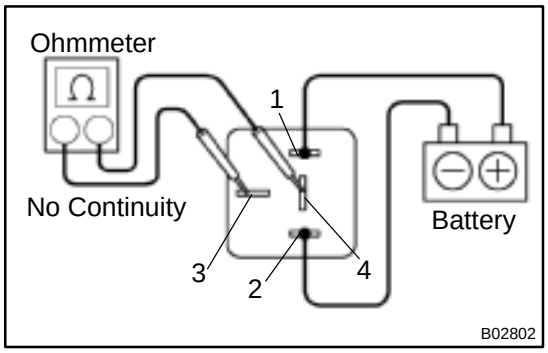

(d) Inspect the No.1 cooling fan relay operation.

(1) Apply battery positive voltage across terminals 1 and 2.

(2) Using an ohmmeter, check that there is no continuity between terminals 3 and 4.

If there is continuity, replace the relay.

(e) Reinstall the No.1 cooling fan relay.

(f) Reinstall the relay box cover.

2. INSPECT NO.2 COOLING FAN RELAY

(a) Remove the relay box cover.

(b) Remove the No.2 cooling fan relay. (Marking: FAN No.2)

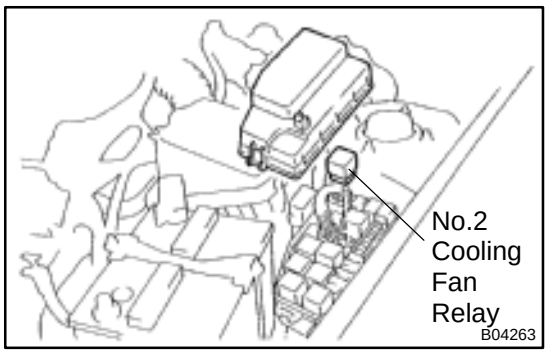

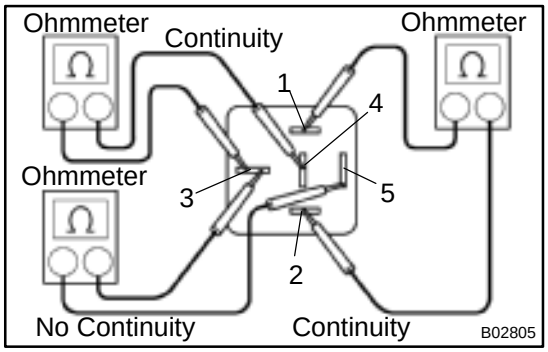

(c) Inspect the No.2 cooling fan relay continuity.

(1) Using an ohmmeter, check that there is continuity between terminals 1 and 2.

If there is no continuity, replace the relay.

(2) Check that there is continuity between terminals 3 and 4.

If there is no continuity, replace the relay.

(3) Check that there is no continuity between terminals 3 and 5.

If there is continuity, replace the relay.

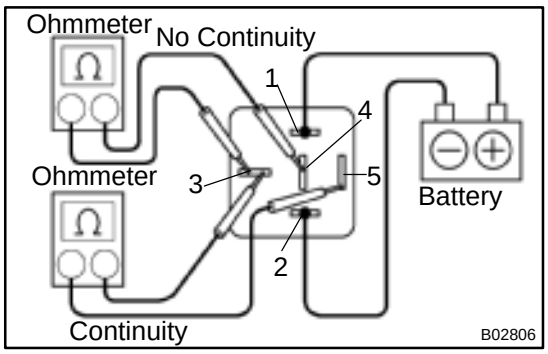

(d) Inspect the No.2 cooling fan relay operation.
  (1) Apply battery positive voltage across terminals 1 and 2.
  (2) Using an ohmmeter, check that there is no continuity between terminals 3 and 4.

If there is continuity, replace the relay.

  (3) Using an ohmmeter, check that there is continuity between terminals 3 and 5.

If there is no continuity, replace the relay.

(e) Reinstall the No.2 cooling fan relay.
(f) Reinstall the relay box cover.

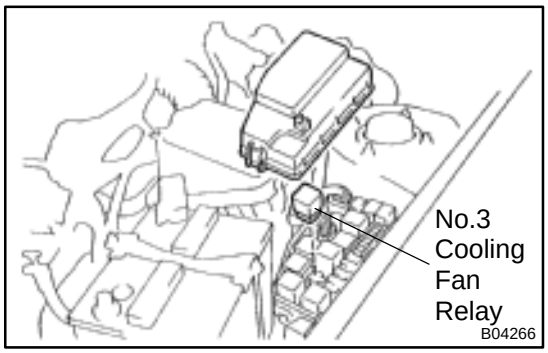

3. INSPECT NO.3 COOLING FAN RELAY

(a) Remove the relay box cover.
(b) Remove the No.3 cooling fan relay. (Marking: FAN No.3)

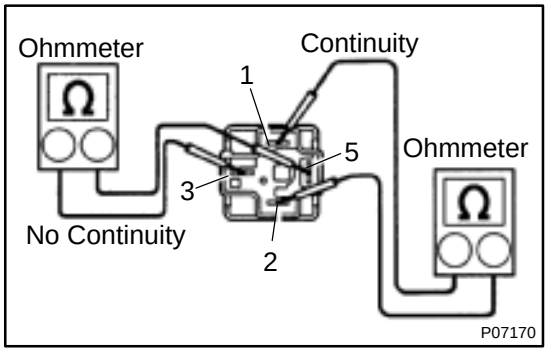

(c) Inspect the No.3 cooling fan relay continuity.
  (1) Using an ohmmeter, check that there is continuity between terminals 1 and 2.

If there is no continuity, replace the relay.

  (2) Check that there is no continuity between terminals 3 and 5.

If there is continuity, replace the relay.

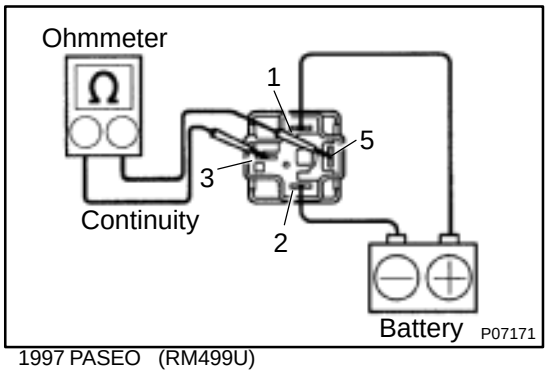

(d) Inspect the No.3 cooling fan relay operation.
  (1) Apply battery positive voltage across terminals 1 and 2.
  (2) Using an ohmmeter, check that there is continuity between terminals 3 and 5.

If there is no continuity, replace the relay.

(e) Reinstall the No.3 cooling fan relay.
(f) Reinstall the relay box cover.

COOLANT

CO0GZ–02

INSPECTION

1. CHECK ENGINE COOLANT LEVEL AT RADIATOR RESERVOIR

The engine coolant level should be between the ”LOW” and ”FULL” lines, when the engine is cold.

If low, check for leaks and add engine coolant up to the ”FULL” line.

2. CHECK ENGINE COOLANT QUALITY

(a) Remove the radiator cap.

CAUTION:

To avoid the danger of being burned, do not remove the radiator cap while the engine and radiator are still hot, as fluid and steam can be blown out under pressure.

(b) There should not be any excessive deposits of rust or scale around the radiator cap or radiator filler hole, and the coolant should be free from oil.

If excessively dirty, replace the coolant.

(c) Reinstall the radiator cap.

CO0H0–02

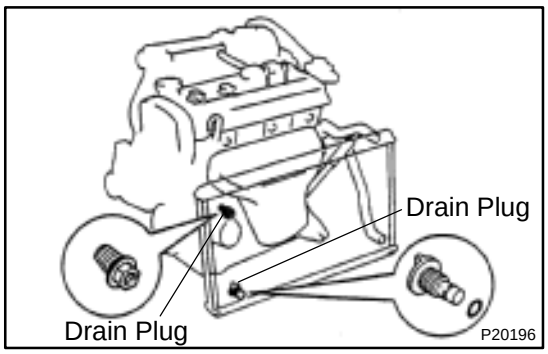

REPLACEMENT

1. DRAIN ENGINE COOLANT

(a) Remove the radiator cap.

CAUTION:

To avoid the danger of being burned, do not remove the radiator cap while the engine and radiator are still hot, as fluid and steam can be blown out under pressure.

(b) Loosen the radiator drain plug (on the right side of the radiator lower tank) and engine drain plug (on the left front of the cylinder block), and drain the coolant.

(c) Close the drain plugs.

Torque:

25 N·m (250 kgf·cm, 18 ft·lbf) for engine drain plug

2. FILL ENGINE COOLANT

(a) Slowly fill the system with coolant.

- Use a good brand of ethylene–glycol base coolant and mix it according to the manufacturer's directions.
- Using coolant which includes more than 50 % ethylene–glycol (but not more than 70 %) is recommended.

NOTICE:

- **Do not use an alcohol type coolant.**
- **The coolant should be mixed with demineralized water or distilled water.**

Capacity (w/ Heater):

M/T	4.9 liters (5.2 US qts, 4.3 lmp. qts)
A/T	5.3 liters (5.6 US qts, 4.7 lmp. qts)

(b) Install the radiator cap.

(c) Start the engine, and bleed the cooling system.

(d) Refill the radiator reservoir with coolant until it reaches the "FULL" line.

3. CHECK ENGINE COOLANT FOR LEAKS

CO0HH–02

COMPONENTS

No.1 Cooling Fan

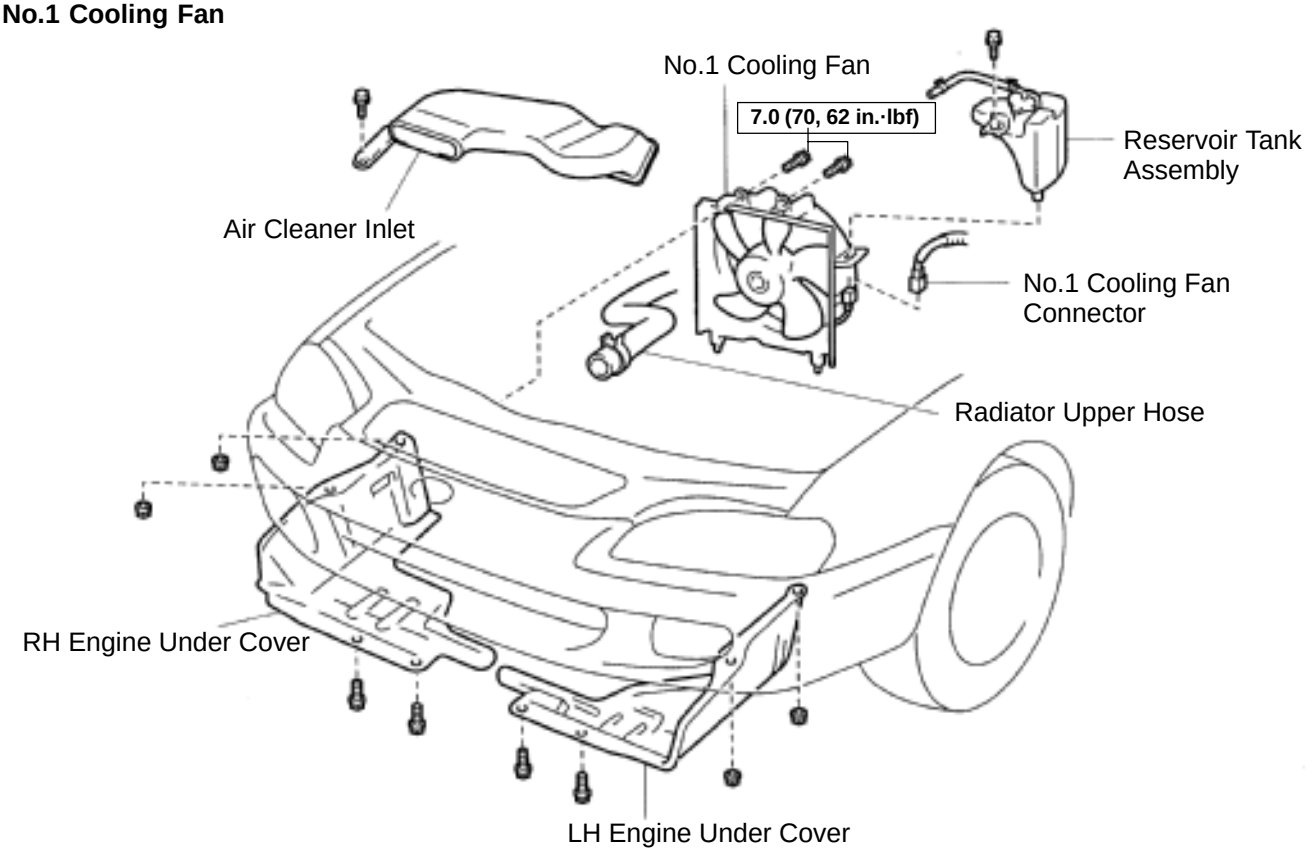

N·m (kgf·cm, ft·lbf) : Specified torque

S01085

No.1 Cooling Fan

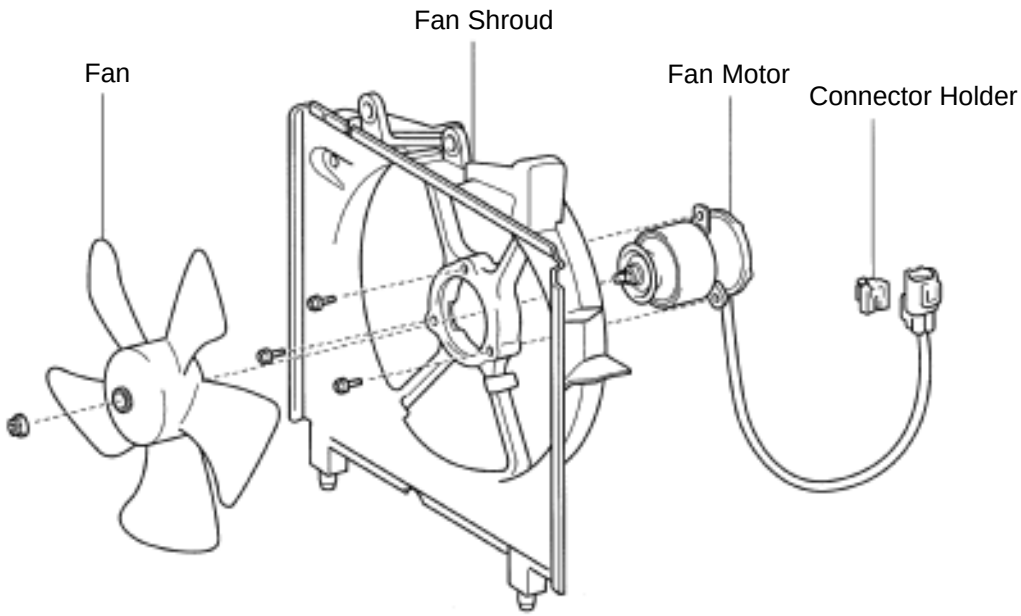

B11231

No.2 Cooling Fan

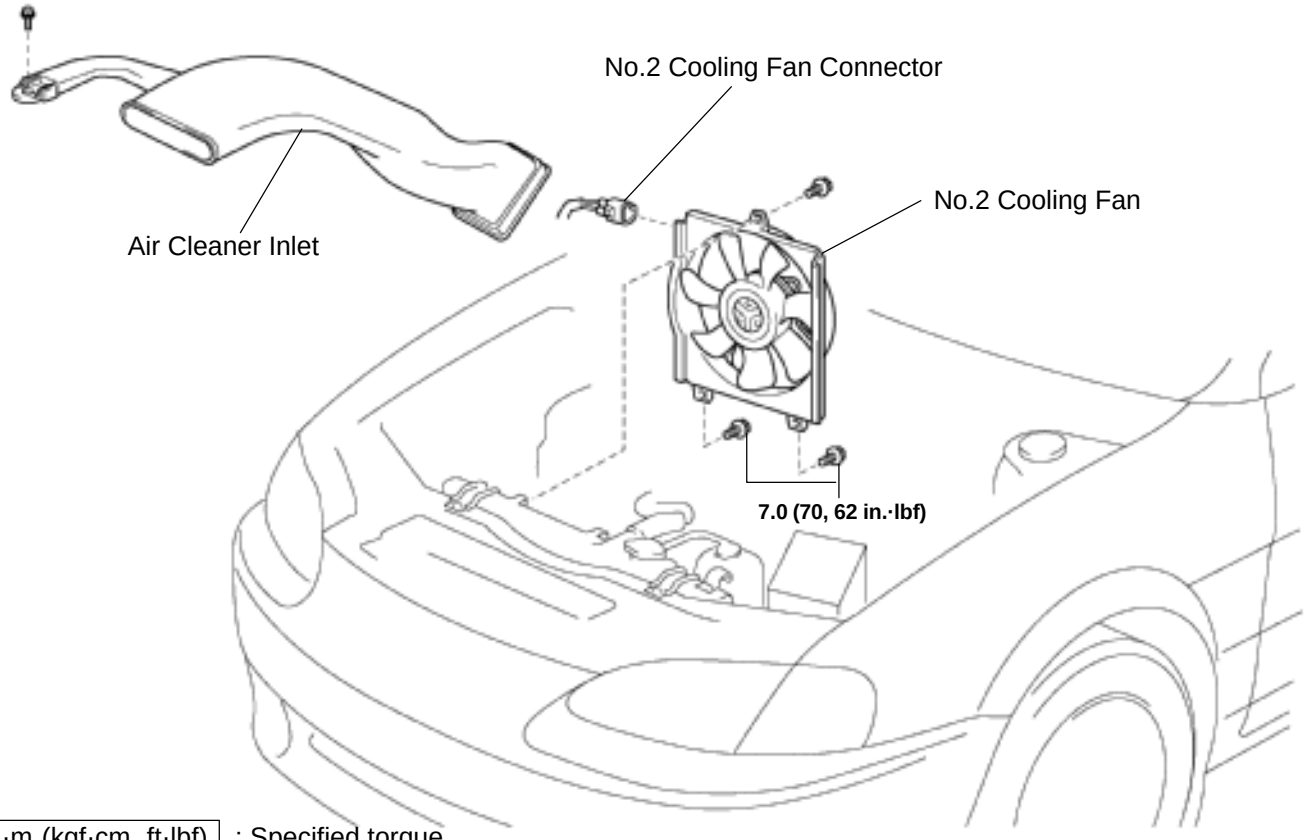

N·m (kgf·cm, ft·lbf) : Specified torque

B04493

No. 2 Cooling Fan

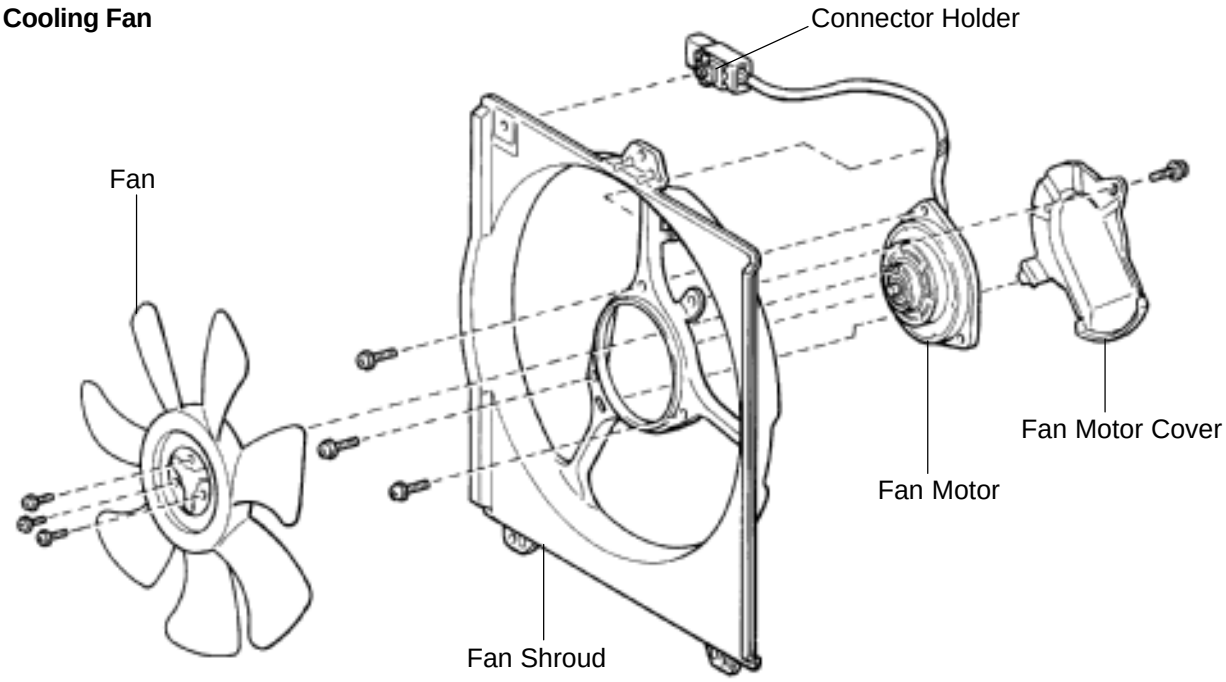

B04270

CO0HJ–01

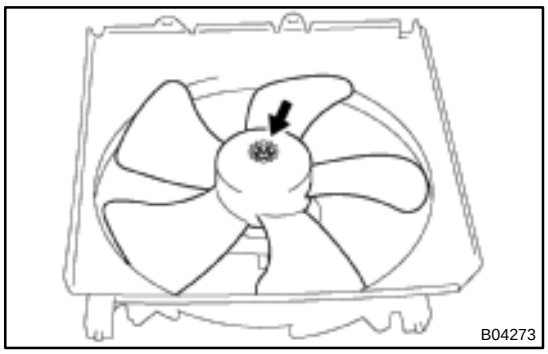

DISASSEMBLY

1. DISASSEMBLE NO.1 COOLING FAN

(a) Remove the nut and fan.

(b) Remove the fan motor.

(1) Disconnect the wire and connector holder from the fan shroud.

(2) Remove the 3 screws and fan motor.

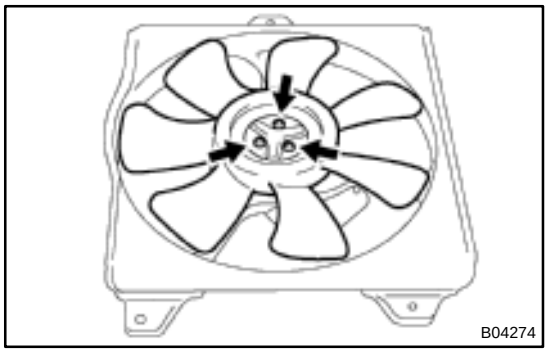

2. DISASSEMBLE NO.2 COOLING FAN

(a) Remove the 3 screws and fan.

(b) Remove the screw and fan motor cover.

(c) Remove the fan motor.

(1) Disconnect the wire and connector holder from the fan shroud.

(2) Remove the 3 screws and fan motor.

CO0HL–02

INSTALLATION

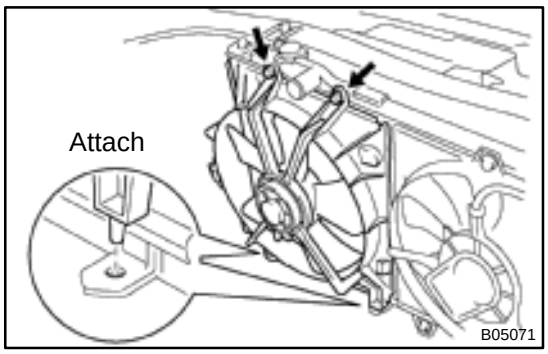

1. INSTALL NO.1 COOLING FAN

(a) Install the cooling fan.
  (1) Attach the lower side of the cooling fan to the brackets of the radiator.
  (2) Install the cooling fan with the 2 bolts.
  Torque: 7.0 N·m (70 kgf·cm, 62 in.·lbf)

(b) Connect the cooling fan connector.

(c) Install the radiator reservoir.
  (1) Attach the lower side of the reservoir to the bracket of the cooling fan.
  (2) Install the reservoir with the bolt.
  (3) Connect the reservoir hose to the radiator.

(d) Connect the radiator upper hose to the the radiator.

(e) Install the air cleaner inlet.
  (1) Connect the air cleaner inlet to the air cleaner case.
  (2) Install the air cleaner inlet with the bolt.

(f) Fill with the engine coolant. (See page CO–2)

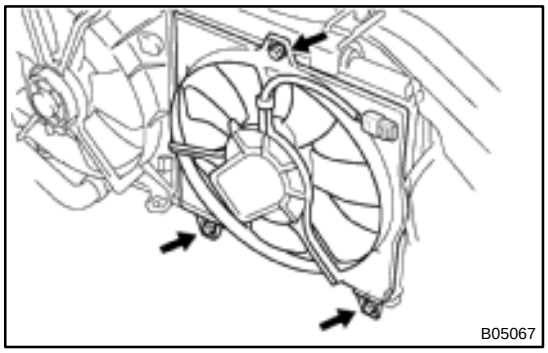

2. INSTALL NO.2 COOLING FAN

(a) Install the cooling fan with the 3 bolts.
  Torque: 7.0 N·m (70 kgf·cm, 62 in.·lbf)

(b) Connect the cooling fan connector.

3. INSTALL AIR CLEANER INLET

4. INSTALL ENGINE UNDER COVER

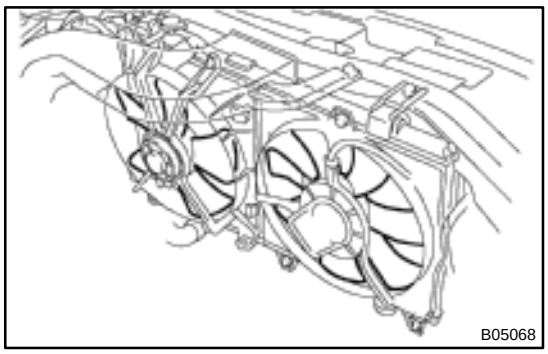
B05068

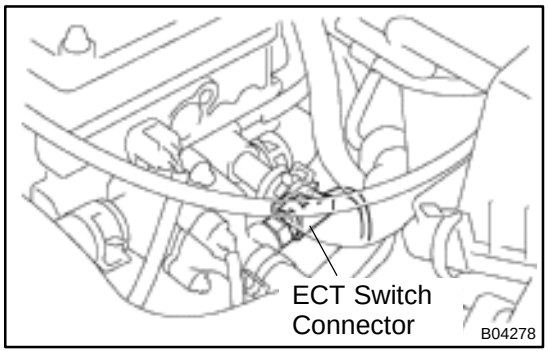

B04278

ELECTRIC COOLING FAN

CO0YN–01

ON–VEHICLE INSPECTION

1. CHECK COOLING FAN OPERATION WITH LOW TEMPERATURE (Below 83˚C (181˚F))

(a) Turn the ignition switch ON.

(b) Check that the cooling fan stops.

If not, check the cooling fan relay and ECT switch, and check for a separated connector or severed wire between the cooling fan relay and ECT switch.

(c) Disconnect the ECT switch connector.

(d) Check that the cooling fan rotates.

If not, check the engine main relay, cooling fan relay, cooling fan, fuses, and check for short circuit between the cooling fan relay and ECT switch.

(e) Reconnect the ECT switch connector.

2. CHECK COOLING FAN OPERATION WITH HIGH TEMPERATURE (Above 94˚C (201˚F))

(a) Start the engine, and raise coolant temperature to above 94˚C (201˚F).

HINT:

Coolant temperature is the detected value by the water temperature sensor on the water inlet.

(b) Check that the cooling fan rotates.

If not, replace the water temperature sensor.

CO0HK–01

REASSEMBLY

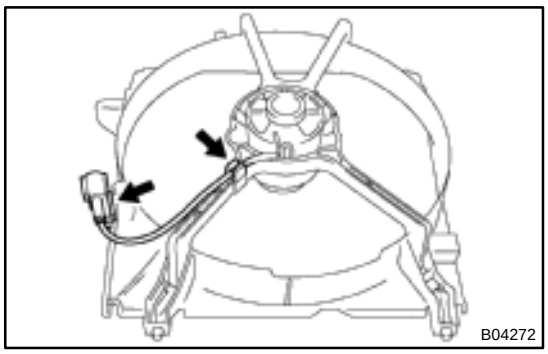

1. ASSEMBLE NO.1 COOLING FAN

(a) Install the fan motor.
  (1) Install the fan motor with the 3 screws.
  (2) Install the wire and connector holder to the fan shroud.

(b) Install the fan with the nut.

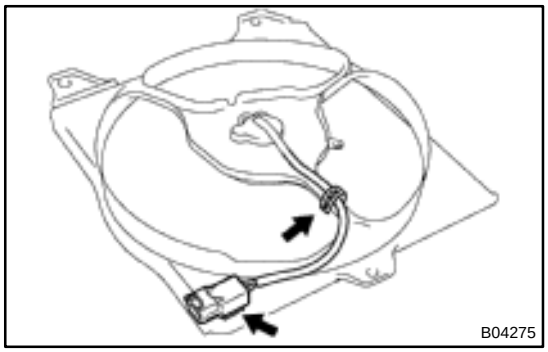

2. ASSEMBLE NO.2 COOLING FAN

(a) Install the fan motor.
  (1) Install the fan motor with the 3 screws.
  (2) Install the wire and connector holder to the fan shroud.

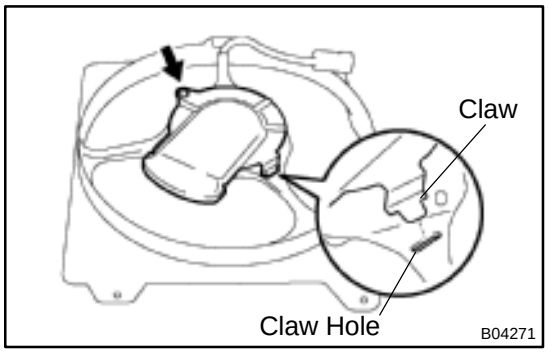

(b) Install the fan motor cover.
  (1) Insert the claw of the motor cover into the claw hole of the fan shroud.
  (2) Install the motor cover with the screw.

(c) Install the fan with the 3 screws.

CO0HI–02

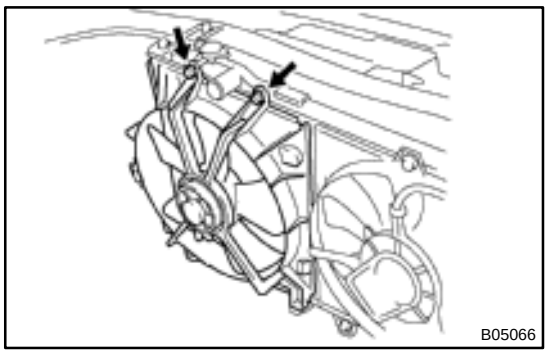

REMOVAL

1. REMOVE ENGINE UNDER COVERS

2. REMOVE AIR CLEANER INLET

3. REMOVE NO.1 COOLING FAN

(a) Drain the engine coolant.

(b) Remove the bolt and air cleaner inlet.

(c) Disconnect the radiator upper hose from the radiator.

(d) Remove the radiator reservoir.

(1) Disconnect the reservoir hose from the radiator.

(2) Remove the bolt and reservoir.

(e) Disconnect the cooling fan connector.

(f) Remove the 2 bolts and cooling fan.

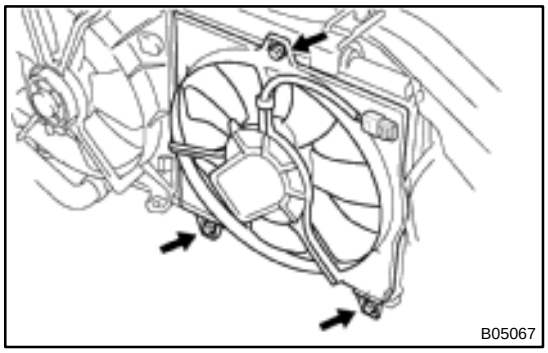

4. REMOVE NO.2 COOLING FAN

(a) Disconnect the cooling fan connector.

(b) Remove the 3 bolts and cooling fan.

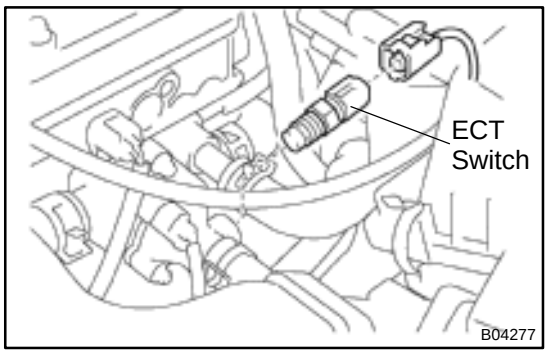

ENGINE COOLANT TEMPERATURE (ECT) SWITCH

CO0HM–01

INSPECTION

1. DRAIN ENGINE COOLANT

2. REMOVE ECT SWITCH

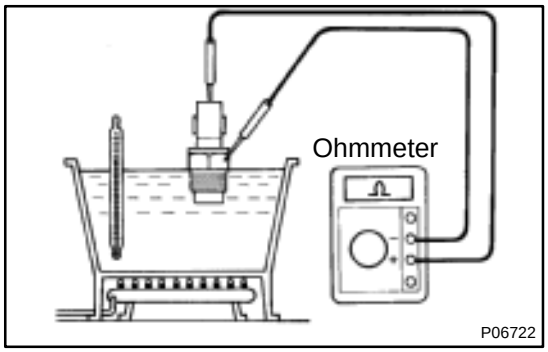

3. INSPECT ECT SWITCH

(a) Using an ohmmeter, check that there is no continuity between the terminals when the coolant temperature is above 94˚C (201˚F).

If there is continuity, replace the switch.

(b) Using an ohmmeter, check that there is continuity between the terminals when the coolant temperature is below 83˚C (181˚F).

If there is no continuity, replace the switch.

4. REINSTALL ECT SWITCH

5. REFILL WITH ENGINE COOLANT (See page CO–2)

6. START ENGINE AND CHECK FOR COOLANT LEAKS

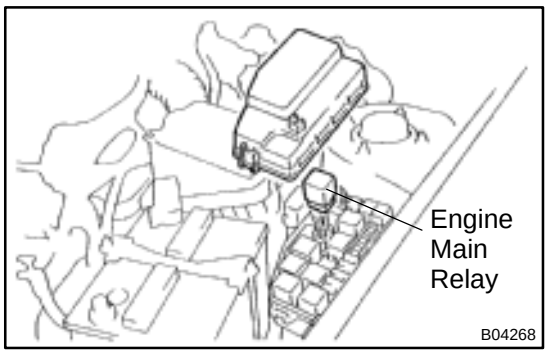

ENGINE MAIN RELAY

CO0HN–02

INSPECTION

1. REMOVE RELAY BOX COVER

2. REMOVE ENGINE MAIN RELAY

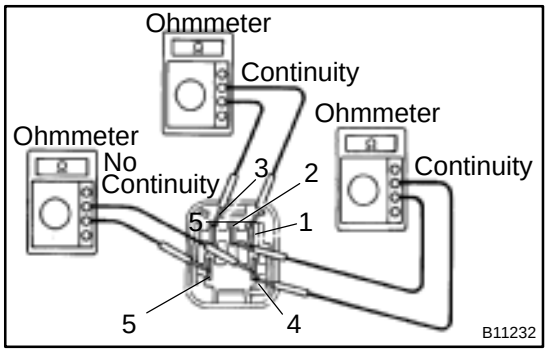

3. INSPECT ENGINE MAIN RELAY

(a) Inspect the relay continuity

(1) Using an ohmmeter, check that there is continuity between terminals 1 and 3.

If there is no continuity, replace the relay.

(2) Check that there is continuity between terminals 2 and 4.

If there is no continuity, replace the relay.

(3) Check that there is no continuity between terminals 4 and 5.

If there is continuity, replace the relay.

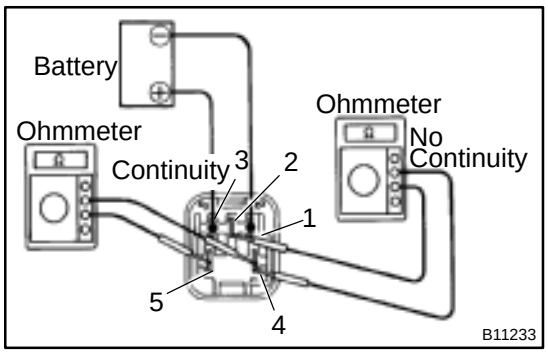

(b) Inspect the relay operation

(1) Apply battery positive voltage across terminals 1 and 3.

(2) Using an ohmmeter, check that there is no continuity between terminals 4 and 5.

If there is continuity, replace the relay.

(3) Check that there is continuity between terminals 2 and 4.

If there is no continuity, replace the relay.

4. REINSTALL ENGINE MAIN RELAY

5. REINSTALL RELAY BOX COVER

CO0HB–02

COMPONENTS

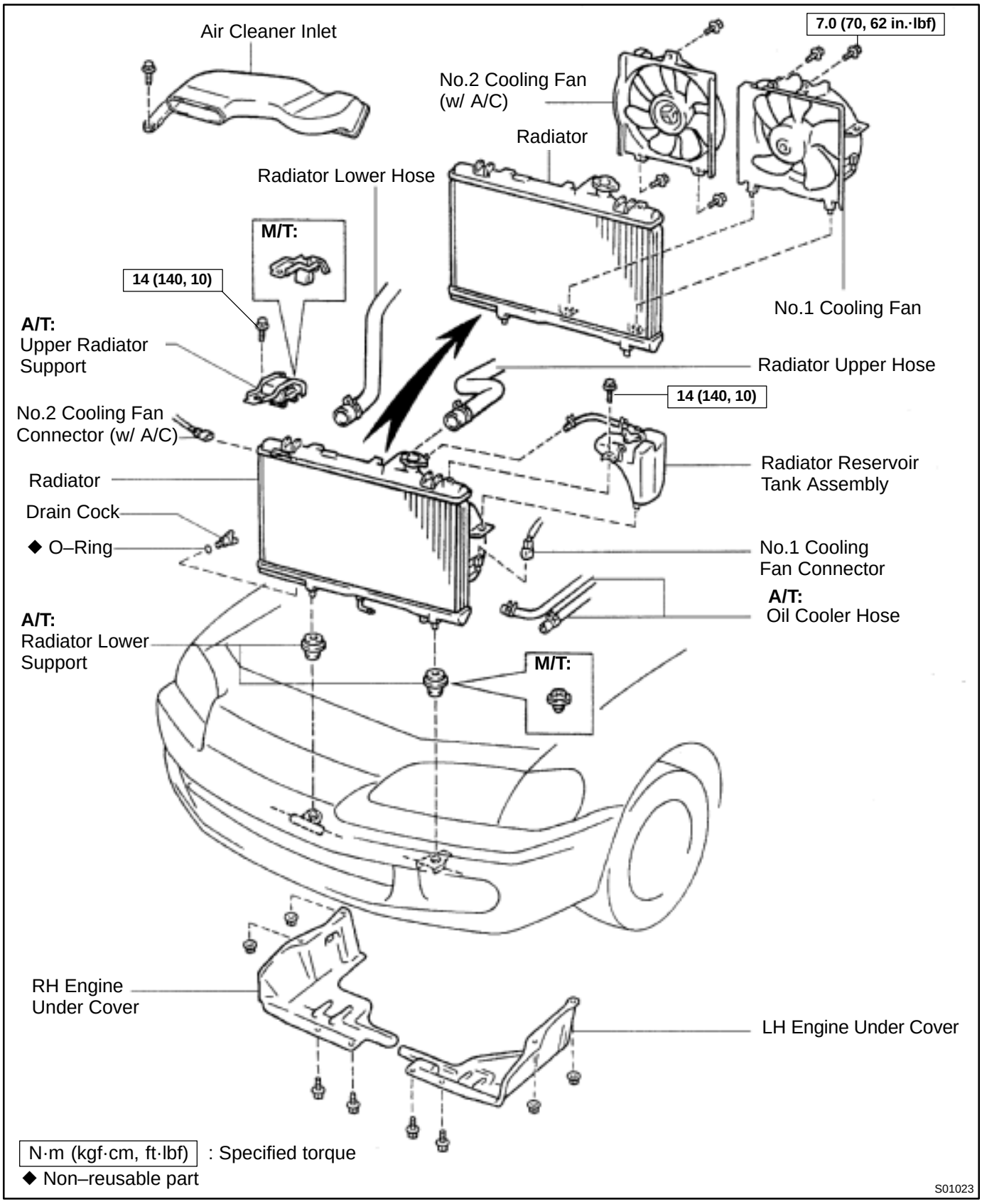

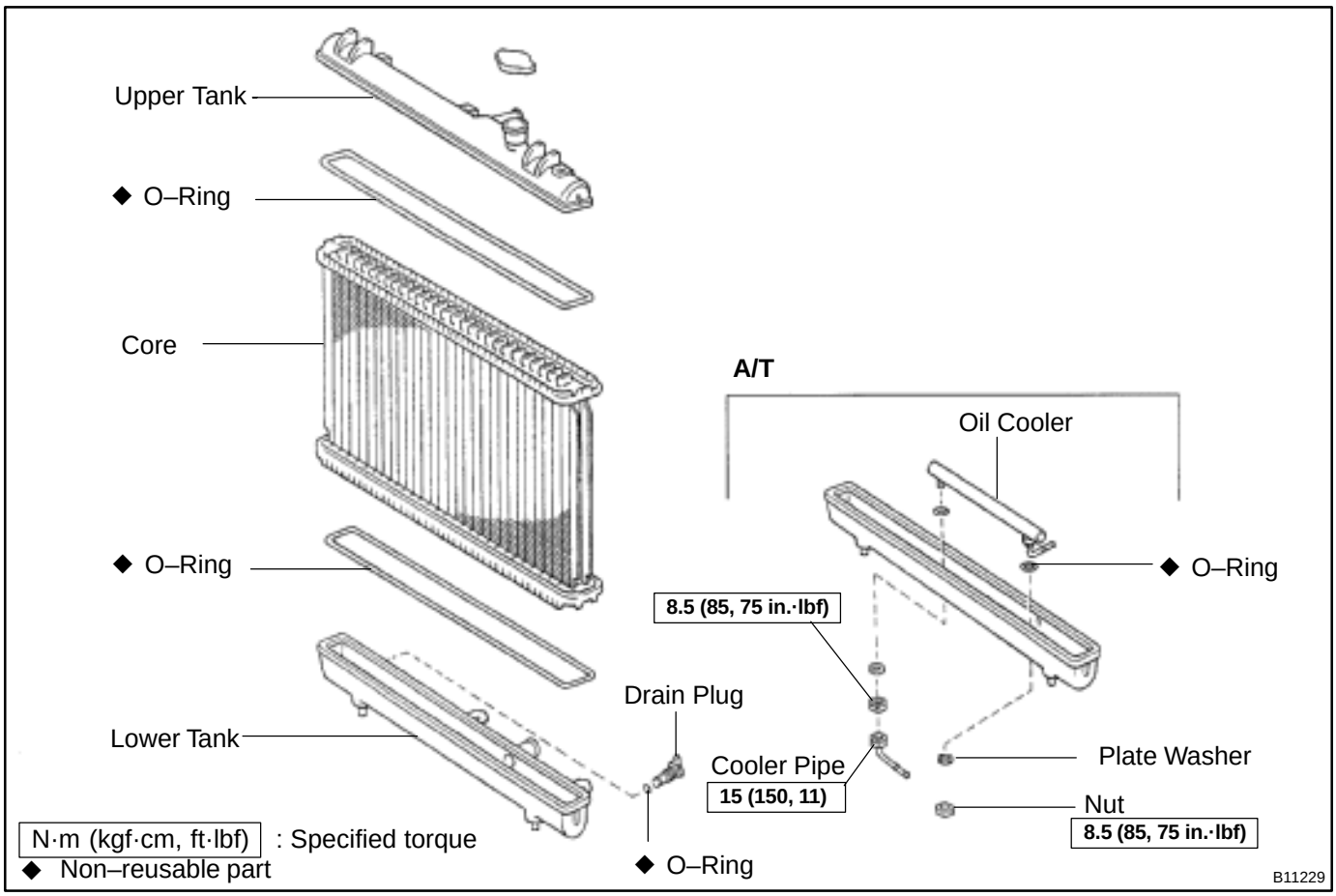
Upper Tank
◆ O–Ring
Core
◆ O–Ring
Lower Tank
A/T
Oil Cooler
◆ O–Ring
8.5 (85, 75 in.·lbf)
Drain Plug
Cooler Pipe
15 (150, 11)
Plate Washer
Nut
8.5 (85, 75 in.·lbf)
◆ O–Ring
N·m (kgf·cm, ft·lbf) : Specified torque
◆ Non–reusable part
B11229

CO0HD–02

DISASSEMBLY

1. REMOVE RADIATOR CAP

2. REMOVE DRAIN PLUG

(a) Remove the drain plug.

(b) Remove the O–ring.

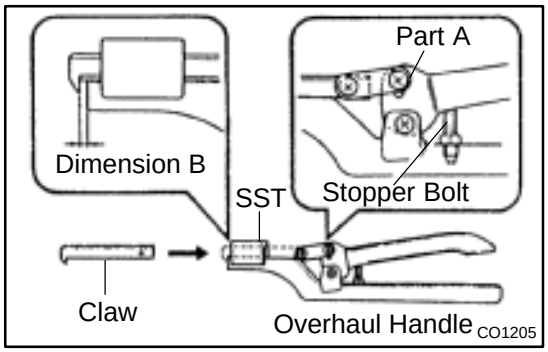

3. ASSEMBLE SST

SST 09230–01010

(a) Install the claw to the overhaul handle, inserting it in the hole in part A as shown in the diagram.

(b) While gripping the handle, adjust the stopper bolt so that dimension B is as shown in the illustration.

Dimension B: 0.2 – 0.5 mm (0.008 – 0.020 in.)

NOTICE:

If this adjustment is not done the claw may be damaged.

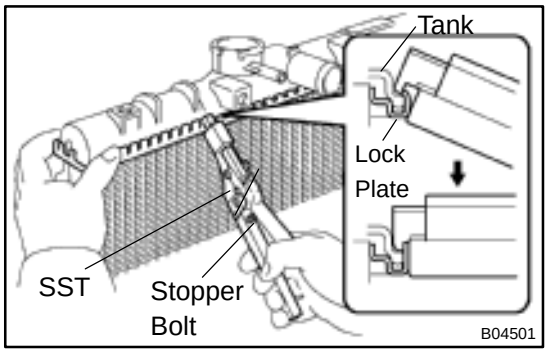

4. UNCAULK LOCK PLATES

Using SST to release the caulking, squeeze the handle until stopped by the stopper bolt.

SST 09230–01010

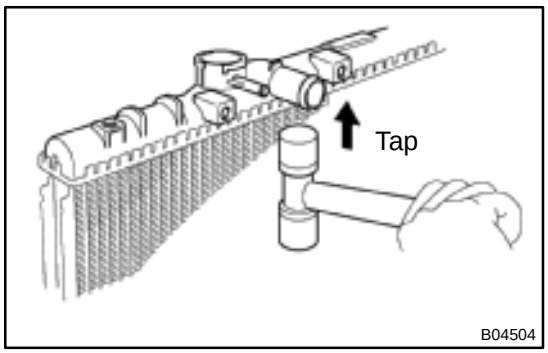

5. REMOVE TANKS AND O–RINGS

Lightly tap the bracket of the radiator (or radiator inlet or outlet) with a soft–faced hammer, and remove the tank and the O–ring.

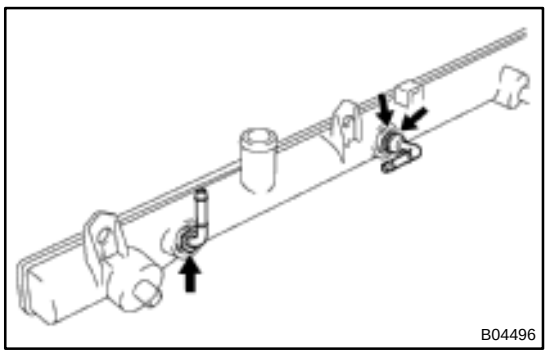

6. A/T:

REMOVE OIL COOLER FROM LOWER TANK

(a) Loosen the nut, and remove the cooler pipe.

(b) Remove the 2 nuts and 2 plate washers.

(c) Remove the oil cooler and 2 O–rings.

CO0HF–02

INSTALLATION

1. w/ A/C:
INSTALL NO.2 COOLING FAN TO RADIATOR (See page CO–28)

2. INSTALL RADIATOR AND NO.2 COOLING FAN (w/ A/C) ASSEMBLY

(a) Install the 2 lower radiator supports to the radiator.

(b) Attach the 2 lower radiator supports on the radiator to the body brackets.

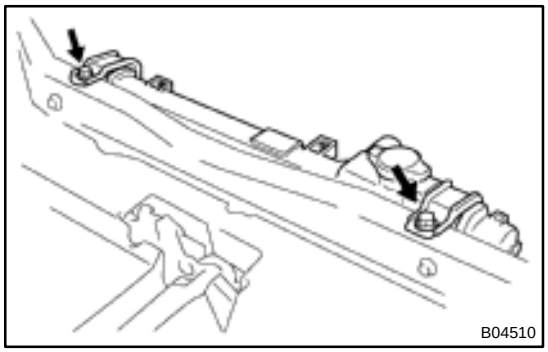
B04510

(c) Install the radiator and cooling fan assembly with the 2 upper radiator supports and 2 bolts.
Torque: 14 N·m (140 kgf·cm, 10 ft·lbf)

(d) Connect the No.2 cooling fan connector.

(e) Connect these hoses to the radiator:
- Radiator lower hose
- 2 A/T oil cooler hoses

3. INSTALL NO.1 COOLING FAN (See page CO–28)

4. CONNECT RADIATOR UPPER HOSE TO RADIATOR

5. INSTALL RADIATOR RESERVOIR

(a) Attach the lower side of the reservoir to the bracket of the cooling fan.

(b) Install the reservoir with the bolt.

(c) Connect the reservoir hose to the radiator.

6. INSTALL AIR CLEANER INLET

(a) Connect the air cleaner inlet to the air cleaner case.

(b) Install the air cleaner inlet with the bolt.

7. FILL WITH ENGINE COOLANT (See page CO–2)

8. START ENGINE AND CHECK FOR ENGINE COOLANT AND A/T FLUID LEAKS

9. INSTALL ENGINE UNDER COVERS

RADIATOR

CO0H9–01

ON–VEHICLE CLEANING

CLEAN RADIATOR

Using water or a steam cleaner, remove any mud or dirt from the radiator core.

NOTICE:

If using a high pressure type cleaner, be careful not to deform the fins of the radiator core. (i.e. Maintain a distance between the cleaner nozzle and radiator core.)

CO0HA–01

ON–VEHICLE INSPECTION

1. REMOVE RADIATOR CAP

Remove the radiator cap from the radiator.

CAUTION:

To avoid the danger of being burned, do not remove the radiator cap while the engine and radiator are still hot, as fluid and steam can be blown out under pressure.

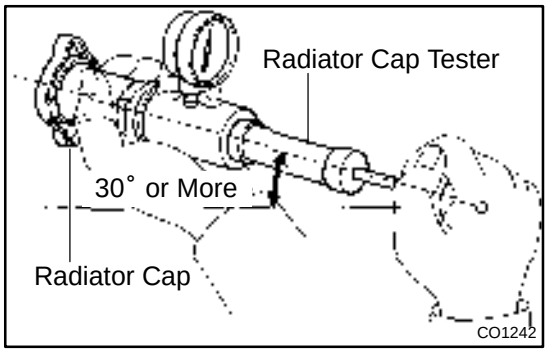

2. INSPECT RADIATOR CAP

NOTICE:

- **If the radiator cap has contaminations, always rinse it with water.**
- **Before using a radiator cap tester, wet the relief valve and pressure valve with engine coolant or water.**
- **When performing steps (a) and (b) below, keep the tester at an angle of over 30˚ above the horizontal.**

(a) Using a radiator cap tester, slowly pump the tester and check that air is coming from the vacuum valve.

Pump speed: 1 push/(3 seconds or more)

NOTICE:

Push the pump at a constant speed.

If air is not coming from the vacuum valve, replace the radiator cap.

(b) Pump the radiator cap tester, and measure the relief valve opening pressure.

Pump speed: 1 push within 1 second

NOTICE:

This pump speed is for the first pump only (in order to close the vacuum valve). After this, the pump speed can be reduced.

Standard opening pressure:
74 – 103 kPa (0.75 – 1.05 kgf/cm^2, 10.7 – 14.9 psi)
Minimum opening pressure:
59 kPa (0.6 kgf/cm^2, 8.5 psi)

HINT:

Use the tester's maximum reading as the opening pressure.

If the opening pressure is less than minimum, replace the radiator cap.

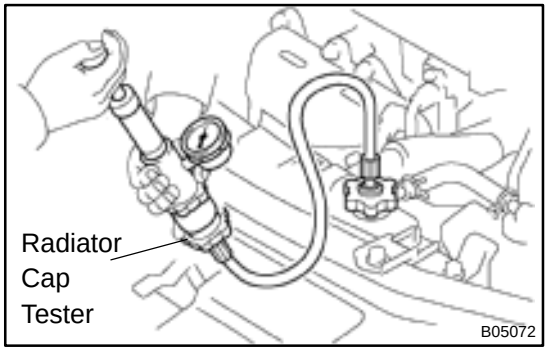

3. INSPECT COOLING SYSTEM FOR LEAKS

(a) Fill the radiator with coolant and attach a radiator cap tester.

(b) Warm up the engine.

(c) Pump it to 118 kPa (1.2 kgf/cm^2, 17.1 psi), and check that the pressure does not drop.

If the pressure drops, check the hoses, radiator or water pump for leaks. If no external leaks are found, check the heater core, cylinder block and head.

4. REINSTALL RADIATOR CAP

CO0HE–02

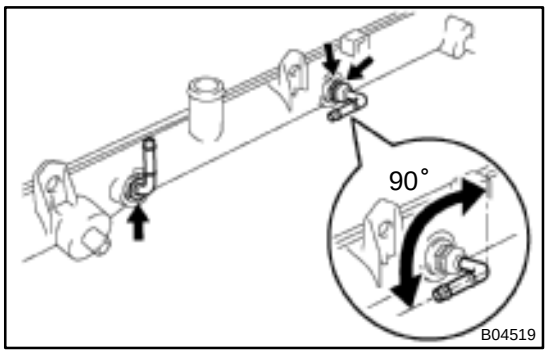

REASSEMBLY

1. A/T:

INSTALL OIL COOLER TO LOWER TANK

(a) Install 2 new O rings to the oil cooler.

(b) Install the oil cooler to the lower tank with the 2 plate washers and 2 nuts.

Torque: 8.5 N·m (85 kgf·cm, 75 in.·lbf)

(c) Install the cooler pipe in the direction indicated in the illustration.

Torque: 15 N·m (150 kgf·cm, 11 ft·lbf)

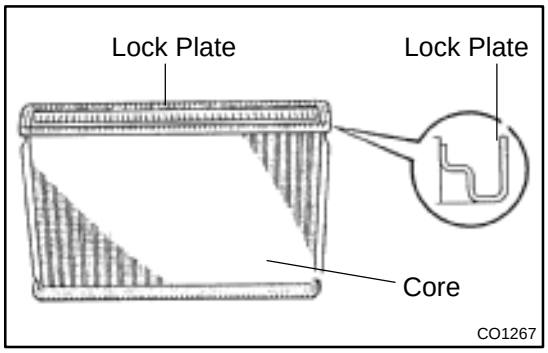

2. INSPECT LOCK PLATE FOR DAMAGE

HINT:

- If the sides of the lock plate groove are deformed, reassembly of the tank will be impossible.
- Therefore, first correct any deformation with pliers or similar object. Water leakage will result if the bottom of the lock plate groove is damaged or dented.

NOTICE:

The radiator can only be recaulked 2 times. After the 2nd time, the radiator core must be replaced.

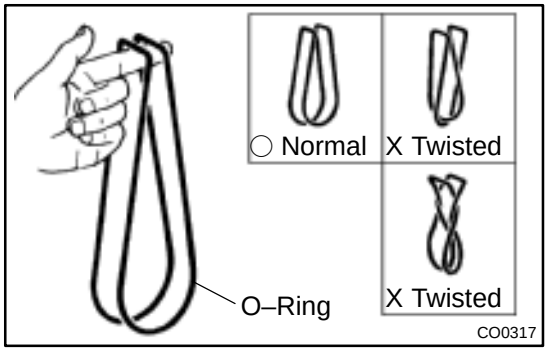

3. INSTALL NEW O–RINGS AND TANKS

(a) After checking that there are no foreign objects in the lock plate groove, install a new O–ring without twisting it.

HINT:

When cleaning the lock plate groove, lightly rub it with sand paper without scratching it.

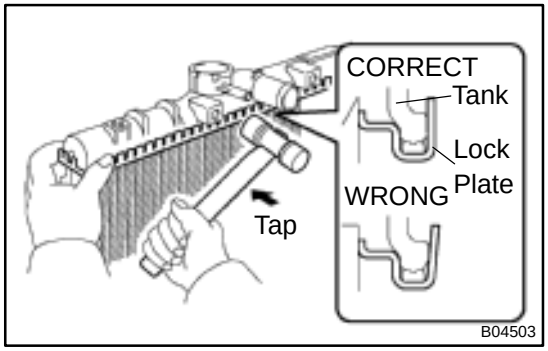

(b) Install the tank without damaging the O–ring.

(c) Tap the lock plate with a soft–faced hammer so that there is no gap between it and the tank.

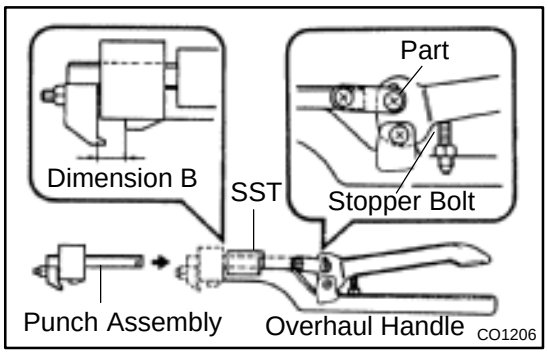

4. ASSEMBLE SST

SST 09230–01010

(a) Install the punch assembly to the overhaul handle, inserting it in the hole in part A as shown in the illustration.

(b) While gripping the handle, adjust the stopper bolt so that dimension B is as shown in the illustration.

Dimension B: 7.7 mm (0.303 in.)

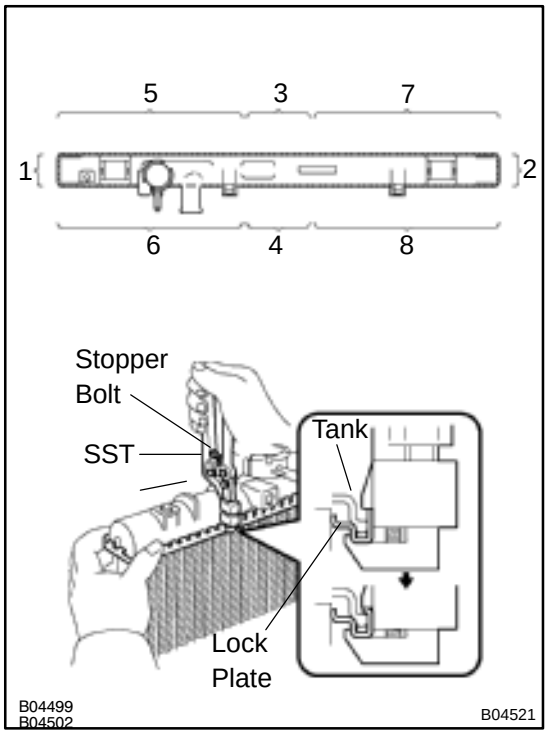

5. CAULK LOCK PLATE

(a) Lightly press SST against the lock plate in the order shown in the illustration. After repeating this a few times, fully caulk the lock plate by squeezing the handle until stopped by the stopper plate.

SST 09230–01010

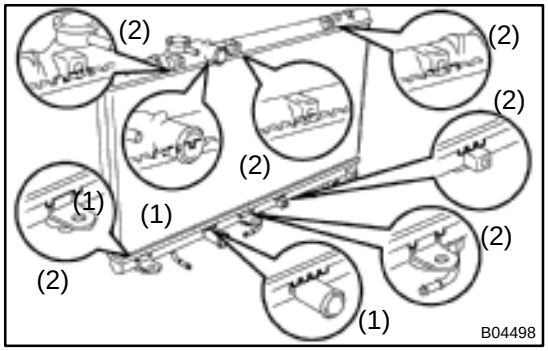

HINT:

- Do not stake the areas protruding around the ports (1) and bracket (2).

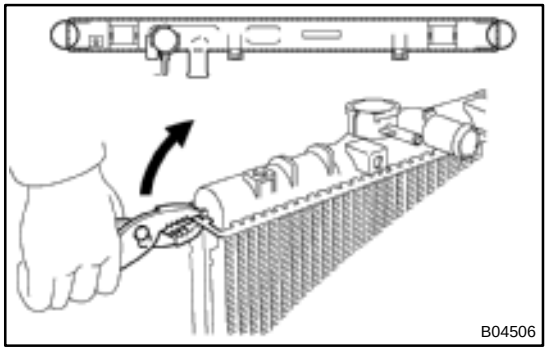

- The points shown in the illustration cannot be staked with the SST. Use pliers or similar object and be careful not to damage the core plates.

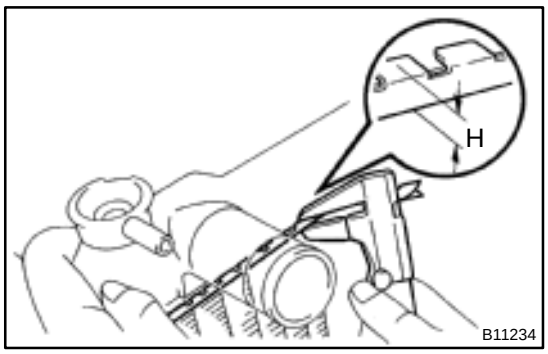

(b) Check the lock plate height (H) after completing the caulking.

Plate height (H): 7.75 – 8.25 mm (0.3051 – 0.3248 in.)

If not within the specified height, adjust the stopper bolt of the handle again and caulk again.

6. INSTALL DRAIN PLUG

(a) Install a new O–ring to the drain plug.

(b) Install the drain plug.

7. INSTALL RADIATOR CAP

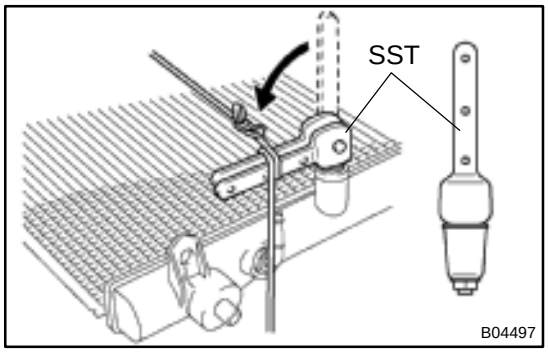

8. INSPECT FOR WATER LEAKS

(a) Tighten the drain plug.

(b) Plug the inlet pipes of the radiator with SST.
SST 09230–01010

(c) Using a radiator cap tester, apply pressure to the radiator.
Test pressure: 177 kPa (1.8 kgf/cm^2, 26 psi)

(d) Submerge the radiator in water.

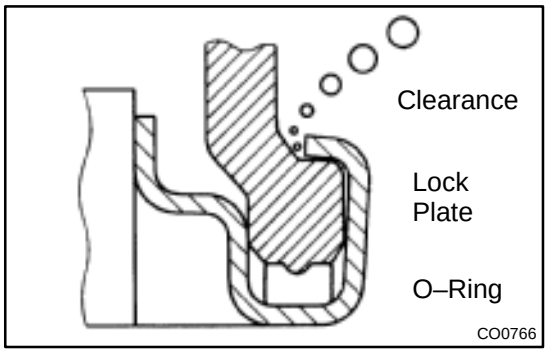

(e) Inspect for leaks.

HINT:

On radiators with resin tanks, there is a clearance between the tank and lock plate where a minute amount of air will remain, giving the appearance of an air leak when the radiator is submerged in water. Therefore, before doing the water leak test, first swish the radiator around in the water until all air bubbles disappear.

CO0HC–02

REMOVAL

1. REMOVE ENGINE UNDER COVERS

2. DRAIN ENGINE COOLANT

3. REMOVE AIR CLEANER INLET

4. REMOVE RADIATOR RESERVOIR

(a) Disconnect the reservoir hose from the radiator.

(b) Remove the bolt and reservoir.

5. DISCONNECT RADIATOR UPPER HOSE FROM RADIATOR

6. REMOVE NO.1 COOLING FAN (See page CO–25)

7. REMOVE RADIATOR AND NO.2 COOLING FAN (w/ A/C) ASSEMBLY

(a) Disconnect the radiator lower hose.

(b) A/T:
Disconnect the 2 A/T oil cooler hoses.

(c) Disconnect the No.2 cooling fan connector.

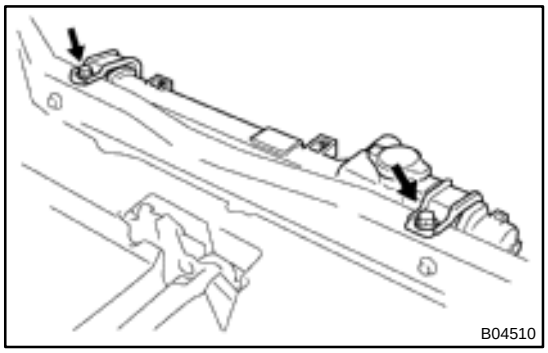

(d) Remove the 2 bolts and 2 upper radiator supports.

(e) Lift out the radiator and No.2 cooling fan assembly.

(f) Remove the 2 lower radiator supports from the radiator.

8. w/ A/C:
REMOVE NO.2 COOLING FAN FROM RADIATOR

Remove the 3 bolts and cooling fan.

THERMOSTAT

COMPONENTS

CO0H5–02

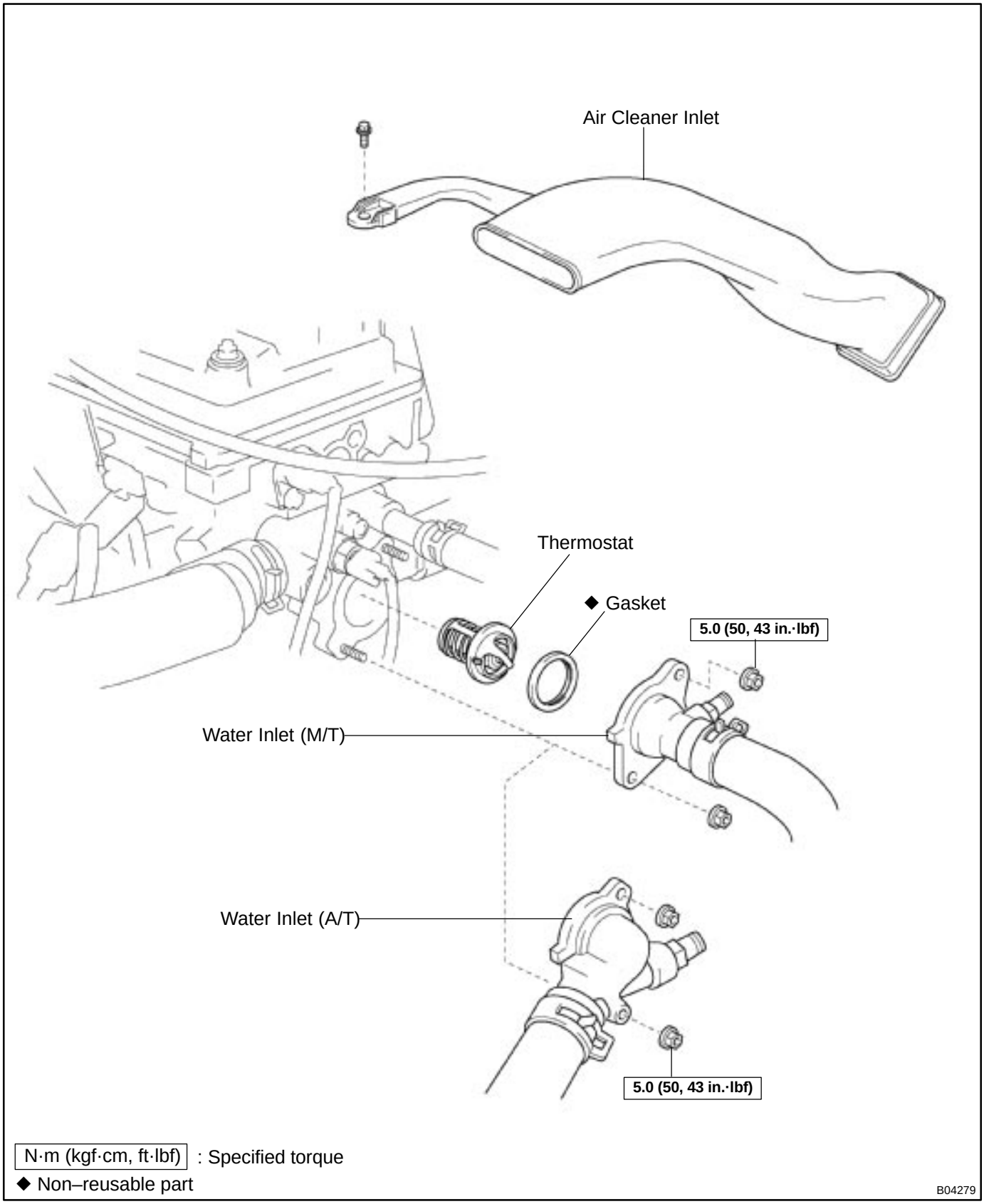

N·m (kgf·cm, ft·lbf) : Specified torque
◆ Non–reusable part

B04279

CO0H7–01

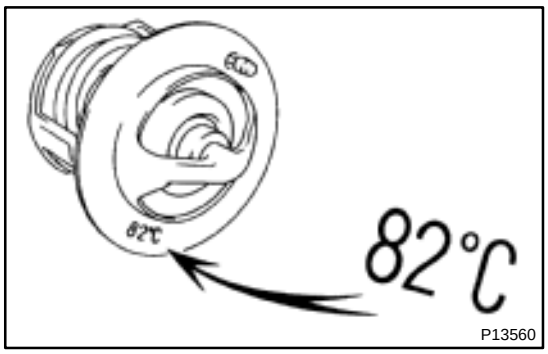

INSPECTION

INSPECT THERMOSTAT

HINT:

The thermostat is numbered with the valve opening temperature.

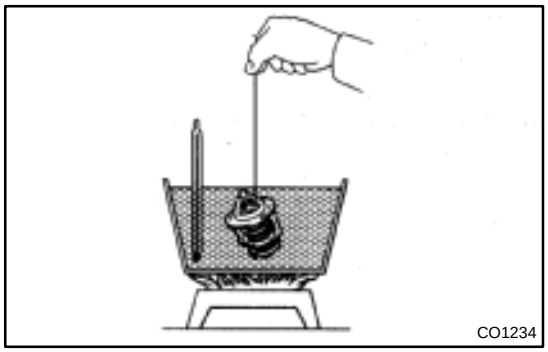

(a) Immerse the thermostat in water, and gradually heat the water.

(b) Check the valve opening temperature.

Valve opening temperature: 80 – 84˚C (176 – 183˚F)

If the valve opening temperature is not as specified, replace the thermostat.

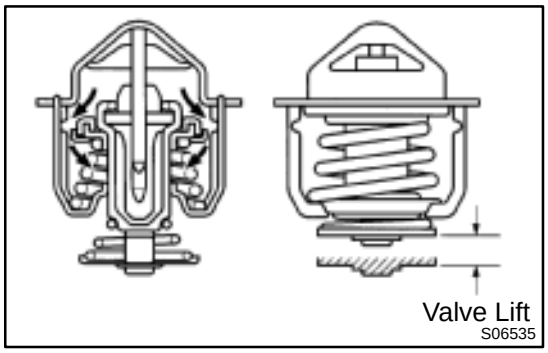

(c) Check the valve lift.

Valve lift: 8 mm (0.31 in.) or more at 95˚C (203˚F)

If the valve lift is not as specified, replace the thermostat.

(d) Check that the valve is fully closed when the thermostat is at low temperatures (below 40˚C (104˚F)).

If not closed, replace the thermostat.

CO0H8–01

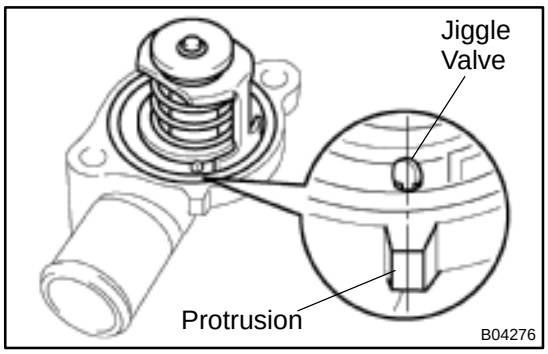

INSTALLATION

1. PLACE THERMOSTAT IN WATER INLET

(a) Install a new gasket to the thermostat.

(b) Align the thermostat jiggle valve with the protrusion of the water inlet, and insert the thermostat in the water inlet.

2. INSTALL WATER INLET

Install the water inlet with the 2 nuts.

Torque: 5.0 N·m (50 kgf·cm, 44 in.·lbf)

3. INSTALL AIR CLEANER INLET

4. FILL WITH ENGINE COOLANT (See page CO–2)

5. START ENGINE AND CHECK FOR LEAKS

CO0H6–01

REMOVAL

NOTICE:

Do not remove the thermostat unless absolutely necessary.

HINT:

Removal of the thermostat would have an adverse effect, causing a lowering of cooling efficiency.

1. REMOVE AIR CLEANER INLET

2. DRAIN ENGINE COOLANT

3. REMOVE WATER INLET AND THERMOSTAT

(a) Remove the 2 nuts, water inlet and thermostat from the water inlet housing.

(b) Remove the gasket from the thermostat.

WATER PUMP

COMPONENTS

CO0H1–02

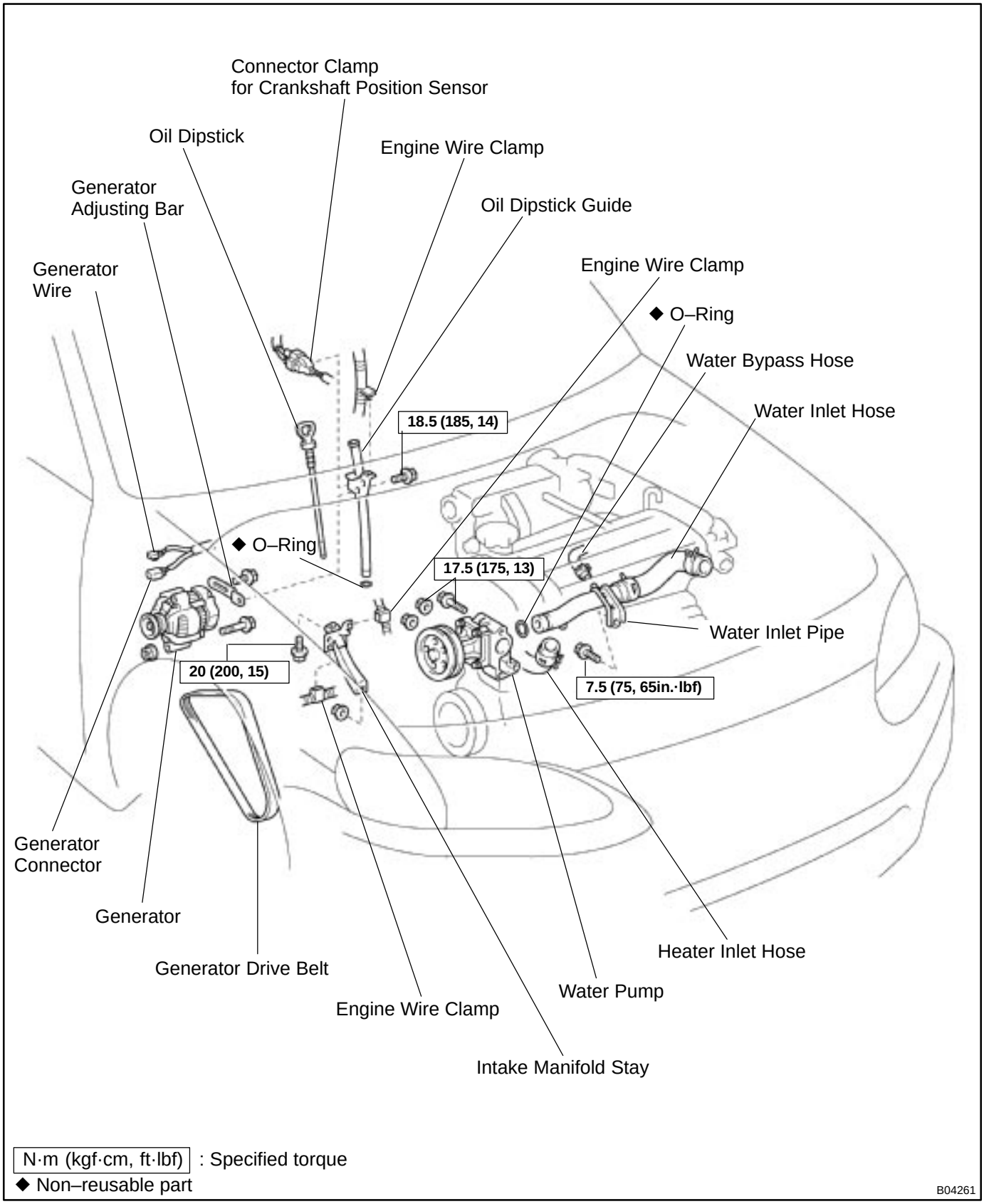

N·m (kgf·cm, ft·lbf) : Specified torque
◆ Non–reusable part

B04261

CO0H3–01

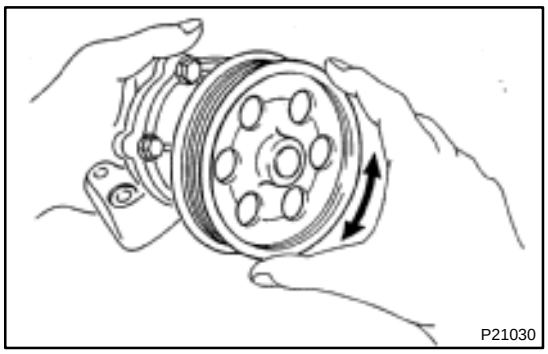

INSPECTION

INSPECT WATER PUMP

(a) Visually check the water hole for coolant leakage.

If leakage is found, replace the water pump.

(b) Turn the pulley, and check that the water pump bearing moves smoothly and quietly.

If necessary, replace the water pump.

CO0H4–02

INSTALLATION

1. INSTALL WATER PUMP

(a) Remove any old packing (FIPG) material and be careful not to drop any oil on the contact surfaces of the water pump and cylinder block.

- Using a razor blade and gasket scraper, remove all the old packing (FIPG) material from the contact surfaces and sealing groove.
- Thoroughly clean all components to remove all the loose material.
- Using a non–residue solvent, clean both sealing surfaces.

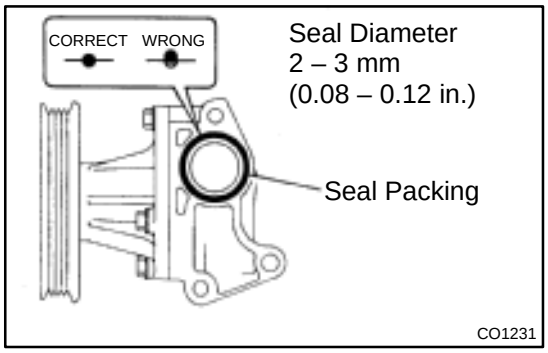

(b) Apply seal packing to the water pump groove.
Seal packing:
Part No. 08826–00100, THREE BOND 1282B or equivalent

HINT:

- Install a nozzle that has been cut to a 2 – 3 mm (0.08 – 0.12 in.) opening.
- Avoid applying an excessive amount to the surface.
- Parts must be assembled within 5 minutes of application. Otherwise the material must be removed and reapplied.
- Immediately remove nozzle from the tube and reinstall cap.
- Do not pour in any coolant until at least 2 hours after installation is completed.

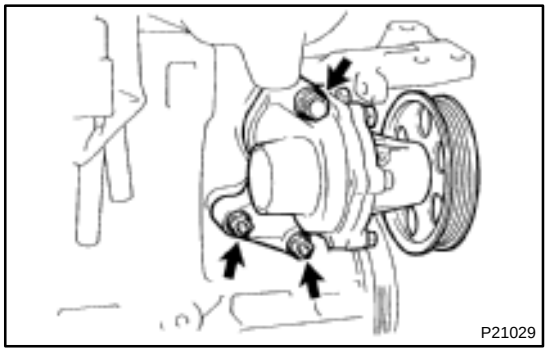

(c) Install the water pump with the bolt and 2 nuts.
Torque: 17.5 N·m (175 kgf·cm, 13 ft·lbf)

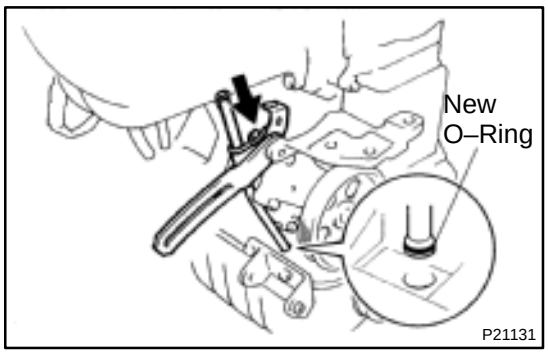

2. INSTALL OIL DIPSTICK GUIDE AND GENERATOR ADJUSTING BAR

(a) Install a new O–ring to the dipstick guide.
(b) Apply soapy water to the O–ring.
(c) Push in the dipstick guide, and install it with the mounting bolt of the generator adjusting bar and dipstick guide clamp.
Torque: 18.5 N·m (185 kgf·cm, 14 ft·lbf)
(d) Install the oil dipstick.
(e) Connect these wire clamps:
- Connector clamp for crankshaft position sensor
- Engine wire clamp

3. INSTALL WATER INLET PIPE

(a) Install a new O–ring to the water inlet pipe.
(b) Apply a little soap and water to the O–ring.
(c) Insert the water inlet pipe to the water pump.

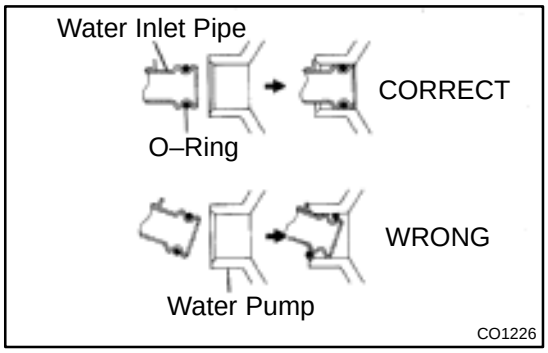

NOTICE:
Installing the water inlet pipe at an angle or twisting it during installation will cause pinching or tearing of the O–ring.

(d) Install the water inlet pipe with the bolt.
Torque: 7.5 N·m (75 kgf·cm, 66 in.·lbf)
(e) Connect these hoses:
- Water inlet hose
- Heater inlet hose
- Water bypass hose

4. INSTALL INTAKE MANIFOLD STAY

(a) Install the intake manifold stay with the bolt and nut.
Torque: 20 N·m (200 kgf·cm, 15 ft·lbf)
(b) Connect the 2 engine wire clamps to the intake manifold stay.

5. INSTALL GENERATOR

6. FILL WITH ENGINE COOLANT (See page CO–2)

7. START ENGINE AND CHECK FOR LEAKS

CO0H2–01

REMOVAL

1. DRAIN ENGINE COOLANT

2. REMOVE GENERATOR

3. REMOVE INTAKE MANIFOLD STAY

(a) Disconnect the 2 engine wire clamps from intake manifold stay.

(b) Remove the bolt, nut and intake manifold stay.

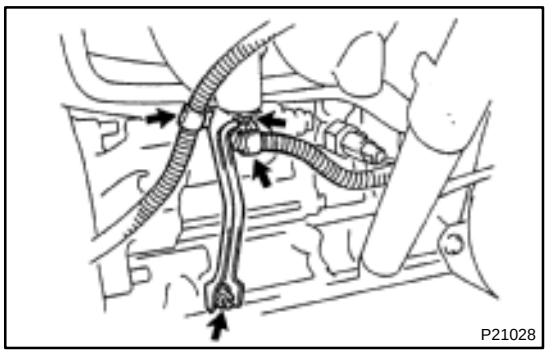

4. REMOVE WATER INLET PIPE

(a) Disconnect these hoses:
- (1) Water inlet hose
- (2) Heater inlet hose
- (3) Water bypass hose

(b) Remove the bolt, water inlet pipe and O–ring.

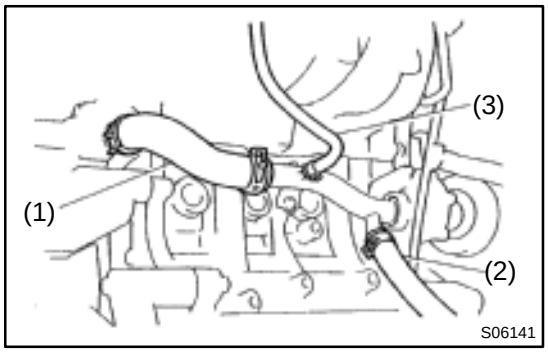

5. REMOVE OIL DIPSTICK GUIDE AND GENERATOR ADJUSTING BAR

(a) Disconnect these wire clamps:
- (1) Engine wire clamp
- (2) Connector clamp for crankshaft position sensor

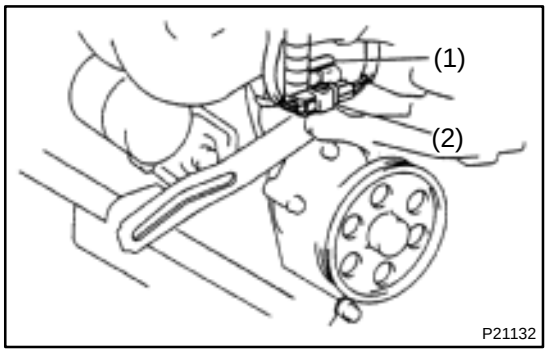

(b) Remove the oil dipstick.

(c) Remove the mounting bolt of the dipstick guide clamp and generator adjusting bar.

(d) Pull out the dipstick guide. Plug the guide installation hole of the oil pump.

(e) Remove the O–ring from the dipstick guide.

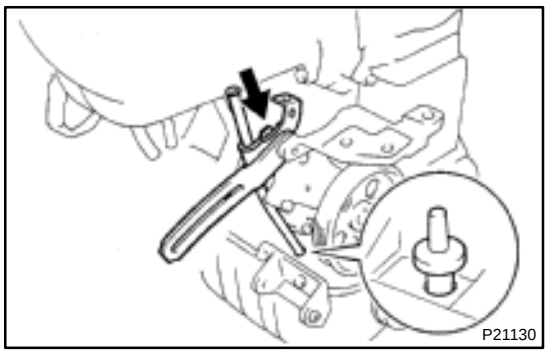

6. REMOVE WATER PUMP

Remove the bolt, 2 nuts and water pump.

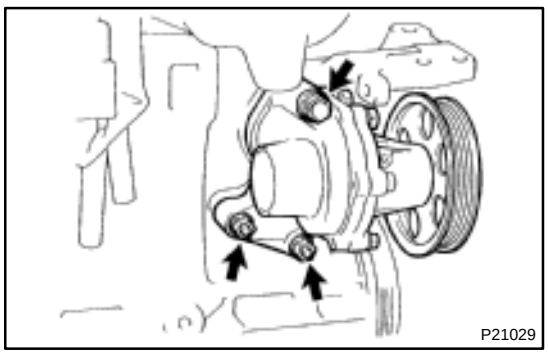

DI4PC–01

DTC	41	IG Power Source Circuit

CIRCUIT DESCRIPTION

This is the power source for the ECU and, hence the CPU and actuators.

DTC No.	DTC Detecting Condition	Trouble Area
41	Vehicle speed is 3 km/h (1.9 mph) or more and voltage of ECU terminal IG1 remains at more than 17 V or below 9.5 V for more than 10 sec.	• Battery • IC regulator • Open or short in power source circuit

Fail safe function:

If trouble occurs in the power source circuit, the ECU cuts off current to the ABS control (solenoid) relay and prohibits ABS control.

WIRING DIAGRAM

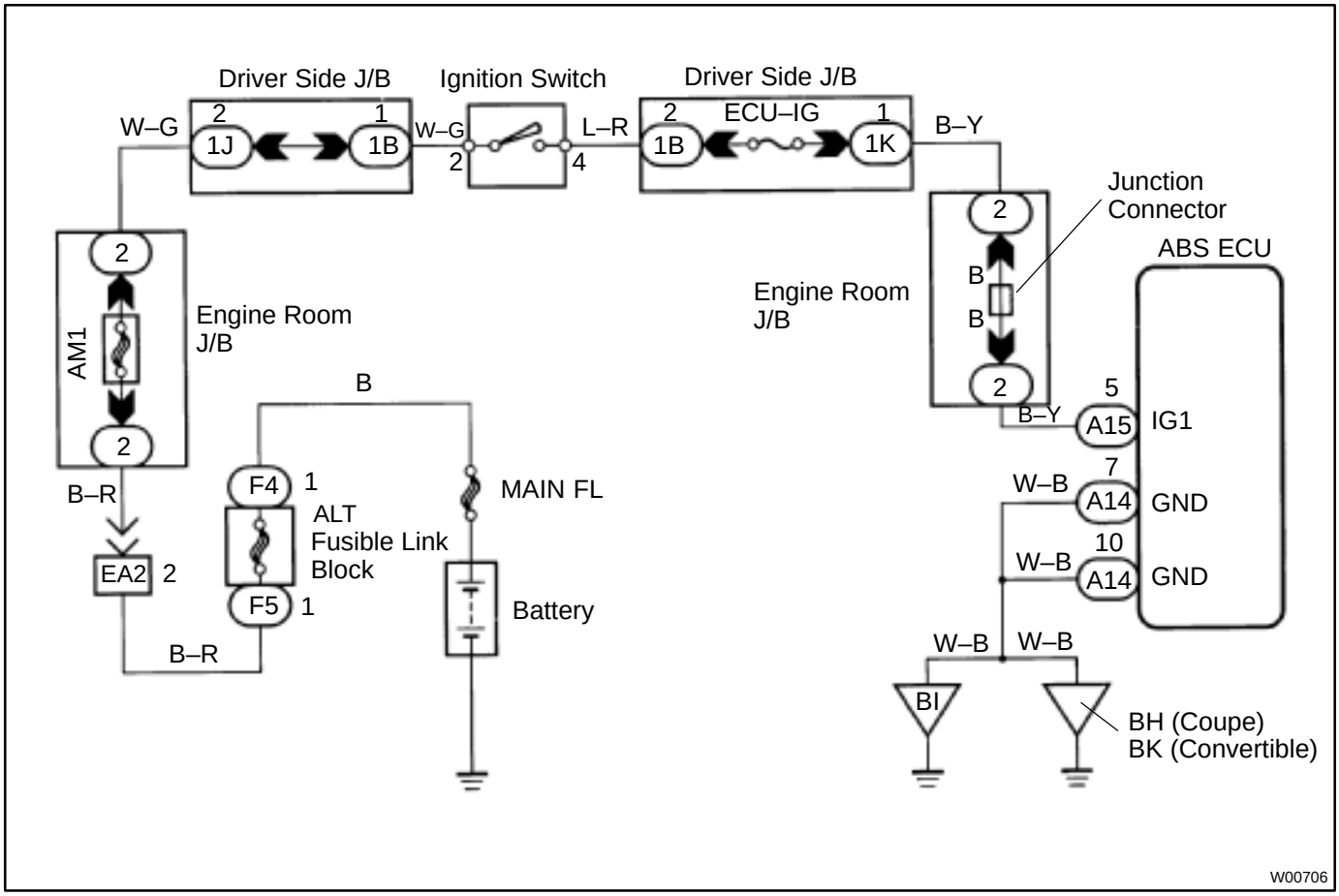

INSPECTION PROCEDURE

1	**Check battery positive voltage.**

OK:

Voltage: 10 – 14 V

NG → **Check and repair the charging system.**

OK

2	**Check voltage between terminals IG1 and GND of ABS ECU connector.**

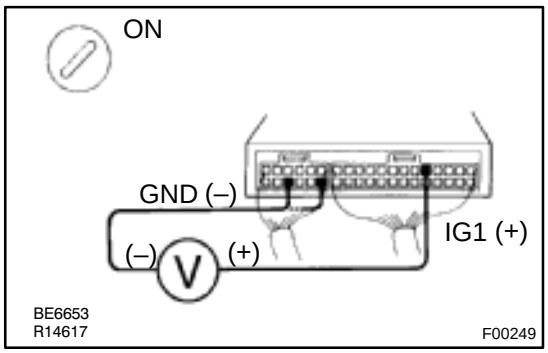

PREPARATION:

Remove ABS ECU with connectors still connected.

CHECK:

(a) Turn ignition switch ON.

(b) Measure voltage between terminals IG1 and GND of ABS ECU connector.

OK:

Voltage: 10 – 14 V

OK → **Check and replace ABS ECU.**

NG

3	**Check continuity between terminal GND of ECU connector and body ground.**

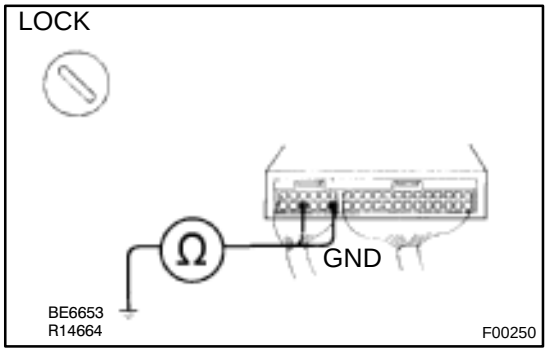

CHECK:

Measure resistance between terminal GND of ABS ECU connector and body ground.

OK:

Resistance: 1 Ω or less

NG → **Repair or replace harness or connector.**

OK

4	Check ECU–IG fuse.

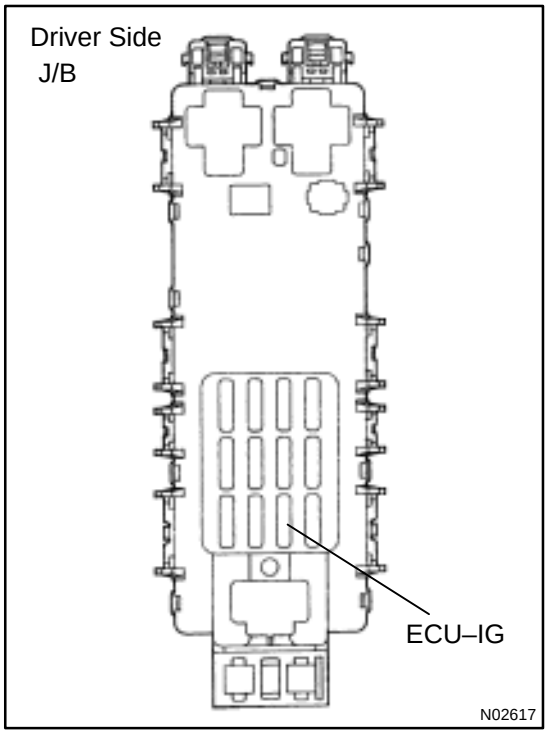

PREPARATION:
Remove ECU–IG fuse from driver side J/B.
CHECK:
Check continuity of ECU–IG fuse.
OK:
Continuity

NG → **Check for short in all the harness and components connected to ECU–IG fuse.**

OK

Check for open in harness and connector between ABS ECU and battery (See page IN–27).

DI37P–04

CIRCUIT INSPECTION

DTC	51	ABS Pump Motor Lock

CIRCUIT DESCRIPTION

DTC No.	DTC Detecting Condition	Trouble Area
51	Pump motor is not operating normally during initial check.	• ABS pump motor

Fail safe function:
If trouble occurs in the ABS pump motor, the ECU cuts off the current to the ABS control (solenoid) relay and prohibits ABS control.

WIRING DIAGRAM

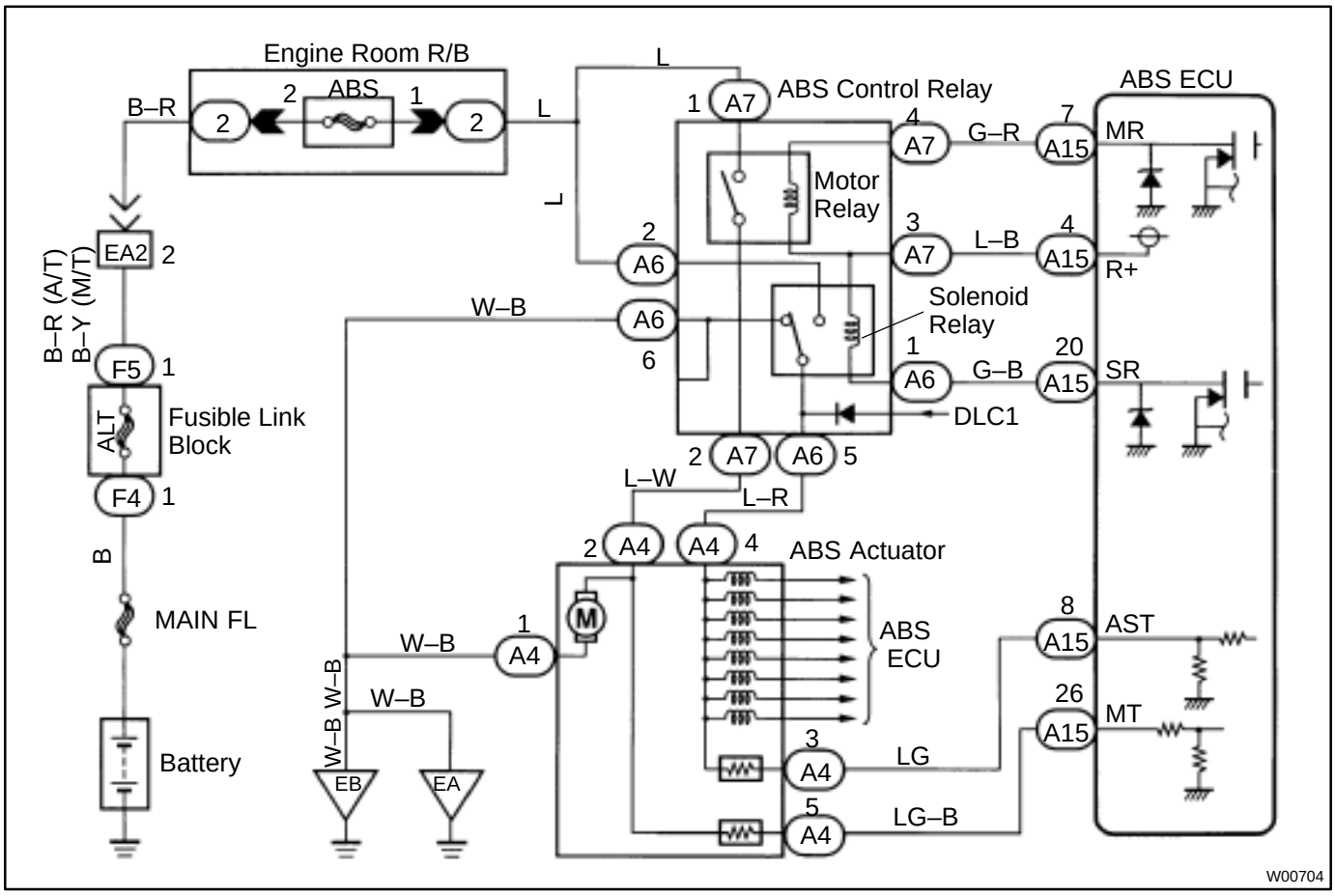

INSPECTION PROCEDURE

1	**Check operation of pump motor.**

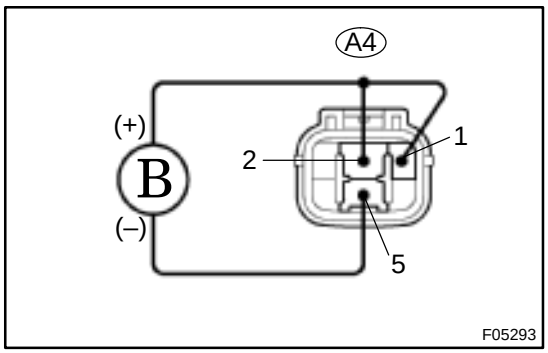

PREPARATION:
Disconnect ABS actuator connector.
CHECK:
Connect battery positive ⊕ lead to terminals A4 – 1 and A4 – 2 and negativi ⊖ lead to terminal A4 – 5 of the ABS actuator connector, check that the pump motor is operated.
NOTICE:
When connecting the terminals, connect in the order of A4 – 5, 2 and 1 and when disconnecting them, disconnect in the reverse order of connection.
If performing them in the wrong order, ABS actuator might be damaged.
OK:
The running sound of the pump motor should be heard.

NG → **Replace ABS actuator.**

OK

2	**Check for open circuit in harness and connector between ABS actuator, ECU and body ground (See page IN–27).**

NG → **Repair or replace harness or connector.**

OK

Replace ABS ECU.

DI4P8–01

CIRCUIT INSPECTION

DTC	11, 12	ABS Control (Solenoid) Relay Circuit

CIRCUIT DESCRIPTION

This relay supplies power to each ABS solenoid. After the ignition switch is turned ON, if the initial check is OK, the relay goes on.

DTC No.	DTC Detecting Condition	Trouble Area
11	Conditions (1) and (2) continue for 0.2 sec. or more: (1) ABS control (solenoid) relay terminal (SR) voltage: Battery positive voltage (2) ABS control (solenoid) relay monitor terminal (AST) voltage: 0 V	• ABS control (solenoid) relay • Open or short in ABS control (solenoid) relay circuit
12	Conditions (1) and (2) continue for 0.2 sec. or more: (1) ABS control (solenoid) relay terminal (SR) voltage: 0 V (2) ABS control (solenoid) relay monitor terminal (AST) voltage: Battery positive voltage	• ABS control (solenoid) relay circuit • B+ short in ABS control (solenoid) relay circuit

Fail safe function:
If trouble occurs in the ABS control (solenoid) relay circuit, the ECU cuts off current to the ABS control (solenoid) relay and prohibits ABS control.

WIRING DIAGRAM

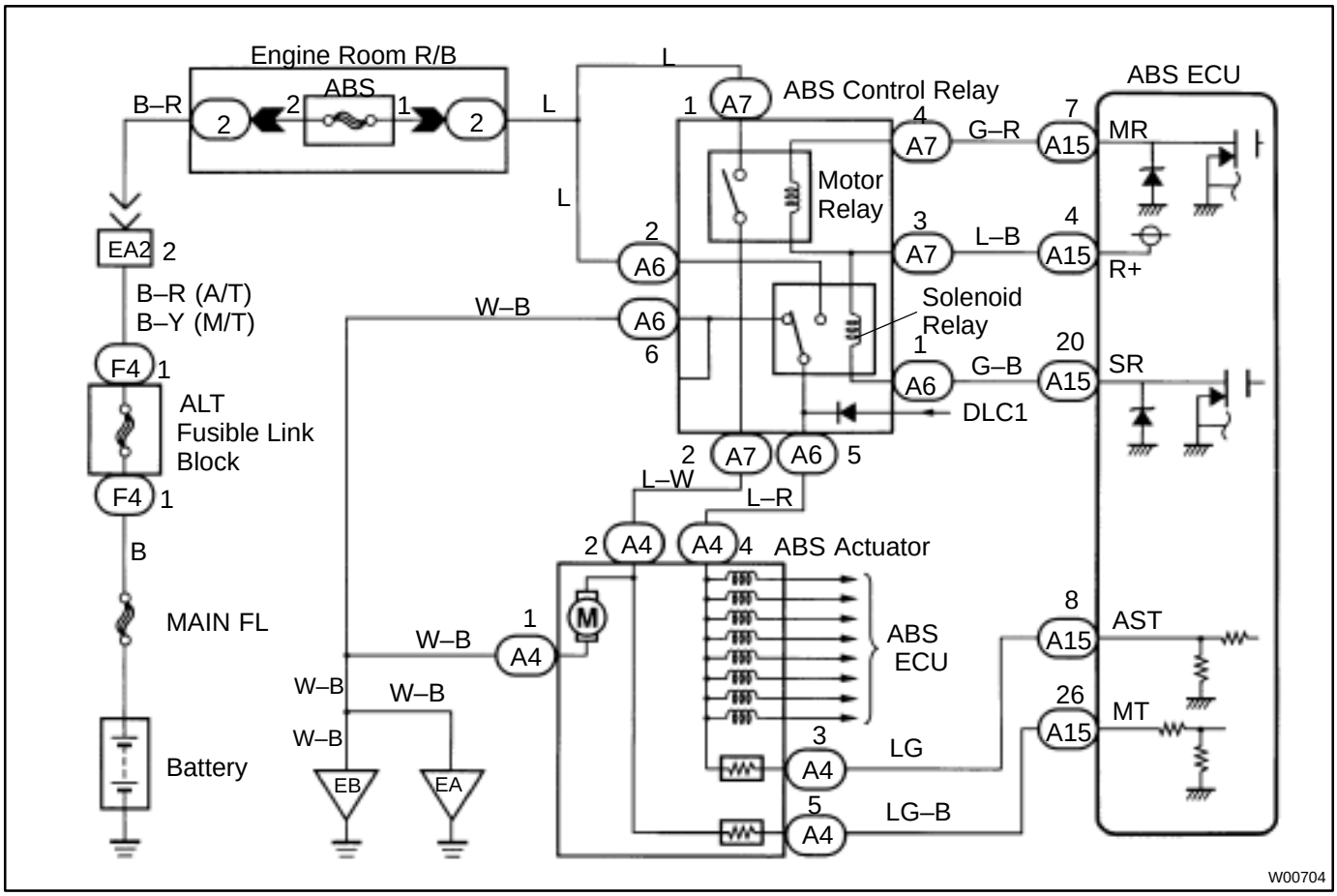

INSPECTION PROCEDURE

1	**Check voltage between terminals A6 – 2 and A6 – 6 of ABS control relay connector.**

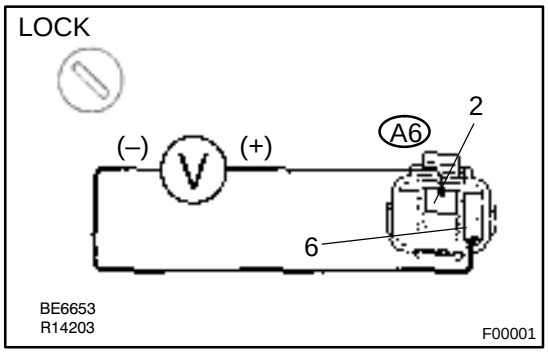

PREPARATION:
Disconnect the ABS control relay connector.
CHECK:
Measure the voltage between terminals A6 – 2 and A6 – 6 of ABS control relay harness side connector.
OK:

Voltage: 10 – 14 V

NG → **Check and repair harness or connector.**

OK

2	**Check continuity between terminals A6 – 5 and A4 – 4, A4 – 4 and A4 – 3, A4 – 3 and A15 – 8.**

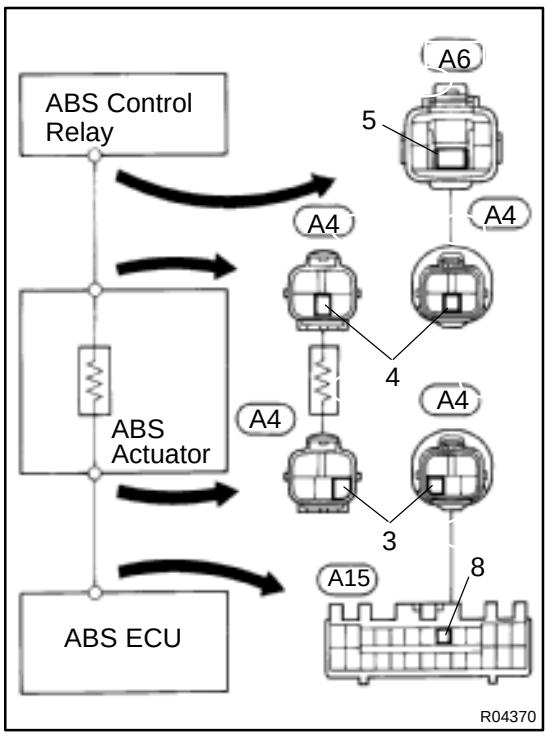

PREPARATION:
Disconnect the connector from ABS actuator.
CHECK:
Check continuity between terminals A6 – 5 and A4 – 4, A4 – 4 and A4 – 3, A4 – 3 and A15 – 8.
OK:

Continuity

HINT:
There is a resistance of 32 – 34 Ω between terminals A4 – 4 and A4 – 3.

NG → **Repair or replace harness or ABS actuator.**

OK

3	Check ABS control (solenoid) relay.

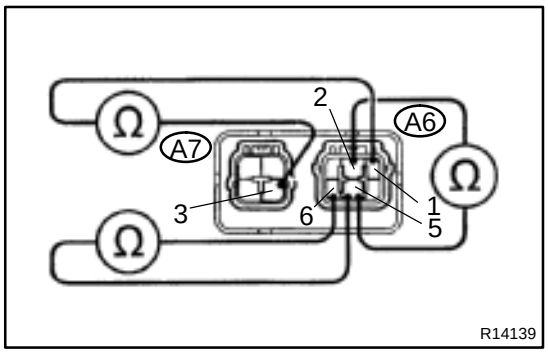

CHECK:

Check continuity between each terminal of ABS control (solenoid) relay.

OK:

Terminals A6– 1 and A7 – 3	Continuity (Reference value 80 Ω)
Terminals A6 – 5 and A6 – 6	Continuity
Terminals A6 – 2 and A6 – 5	Open

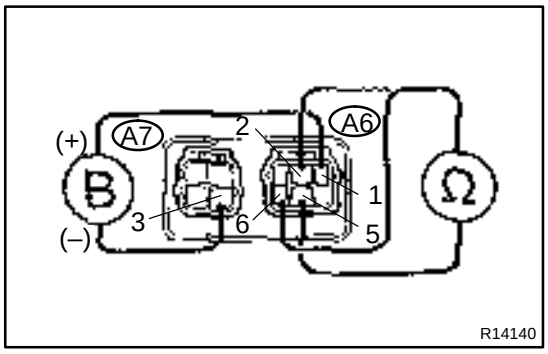

CHECK:

(a) Apply battery voltage between terminals A6 – 1 and A7 – 3.

(b) Check continuity between each terminal of ABS control (solenoid) relay.

OK:

Terminals A6 – 5 and A6 – 6	Open
Terminals A6 – 2 and A6 – 5	Continuity

NG → **Replace ABS control relay.**

OK

4	Check for open and short in harness and connector between ABS control relay and ABS ECU (See page IN–27).

NG → **Repair or replace harness or connector.**

OK

If the same code is still output after the DTC is deleted, check the contact condition of each connection. If the connections are normal, the ECU may be defective.

DI4P9–01

DTC	13, 14	ABS Control (Motor) Relay Circuit

CIRCUIT DESCRIPTION

The ABS control (motor) relay supplies power to the ABS pump motor. While the ABS is activated, the ECU switches the ABS control (motor) relay on and operates the ABS pump motor.

DTC No.	DTC Detecting Condition	Trouble Area
13	Conditions (1) and (2) continue for 0.2 sec. or more: (1) ABS control (motor) relay terminal (MR) voltage: Battery positive voltage (2) ABS control (motor) relay monitor terminal (MT) voltage: 0 V	• ABS control (motor) relay • Open or short in ABS control (motor) relay circuit
14	Conditions (1) and (2) continued for 4 sec. or more: (1) ABS control (motor) relay terminal (MR) voltage: 0 V (2) ABS control (motor) relay monitor terminal (MT) voltage: Battery positive voltage	• ABS control (motor) relay • B+ short in ABS control (motor) relay circuit

Fail safe function:
If trouble occurs in the ABS control (motor) relay circuit, the ECU cuts off the current to the ABS control (solenoid) relay and prohibits ABS control.

WIRING DIAGRAM

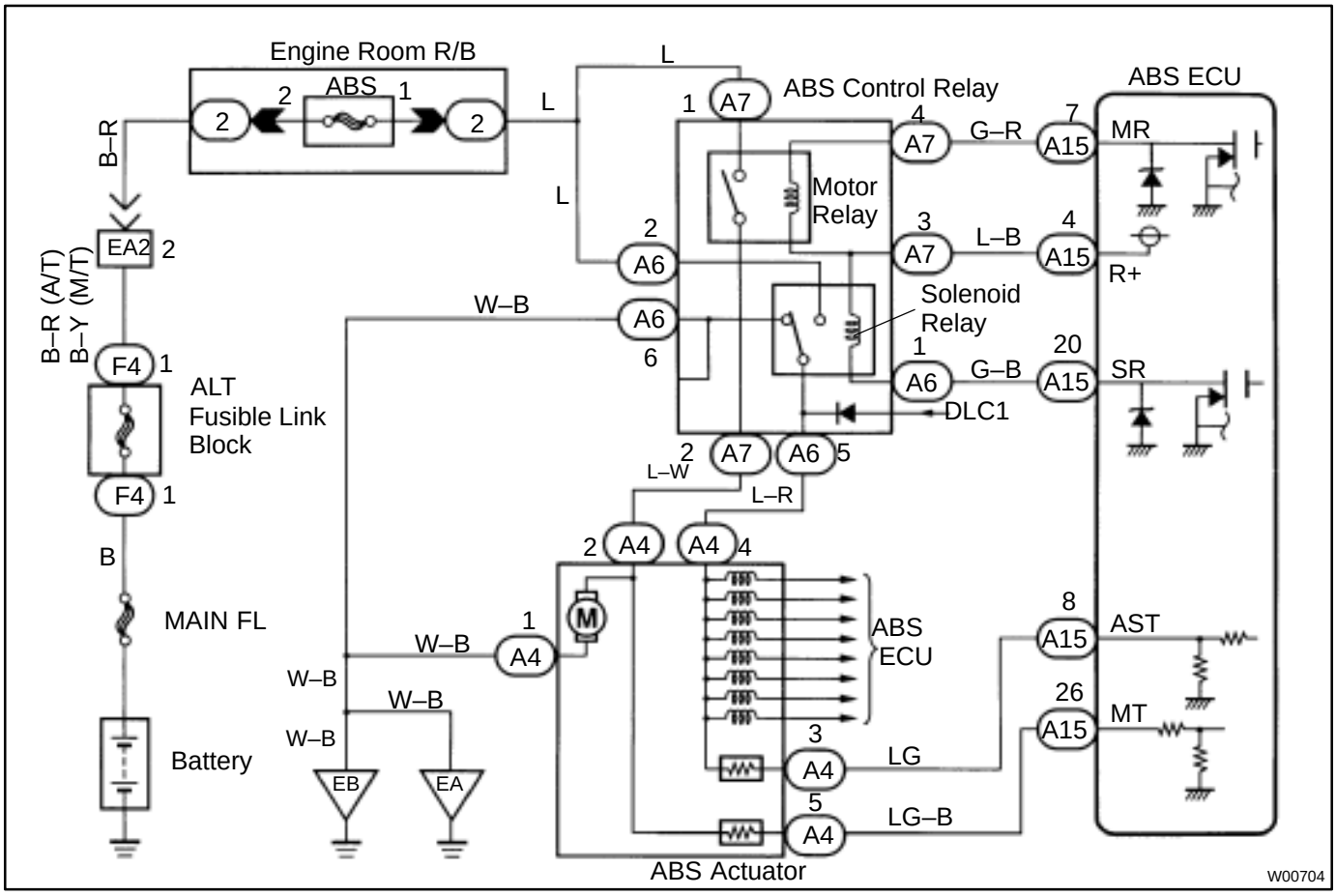

INSPECTION PROCEDURE

1	**Check voltage between terminals A7 – 1 of ABS control relay and body ground.**

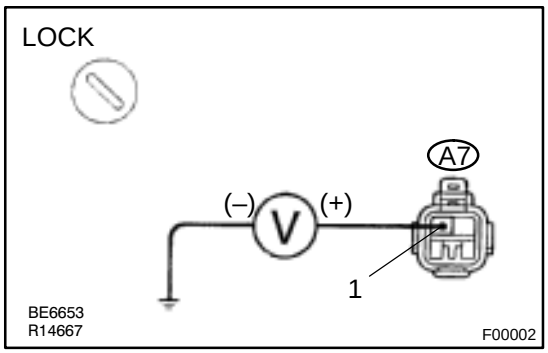

PREPARATION:
Disconnect the ABS control relay connector.
CHECK:
Measure voltage between terminal A7 – 1 of ABS control relay harness side connector and body ground.
OK:

Voltage: 10 – 14 V

NG → **Check and repair harness or connector.**

OK

2	**Check continuity between terminals A7 – 2 and A4 – 2, A4 – 2 and A4 – 5, A4 – 5 and A15 – 26.**

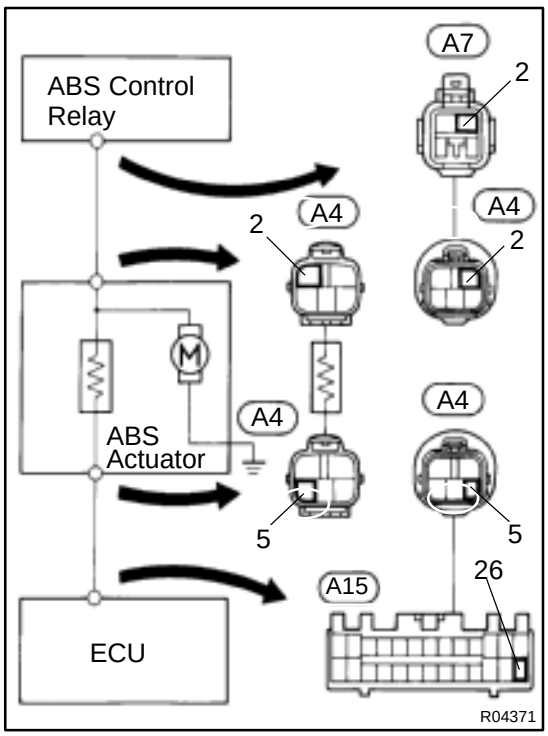

PREPARATION:
Disconnect the connector from ABS actuator.
CHECK:
Check continuity between terminals A7 – 2 and A4 – 2, A4 – 2 and A4 – 5, A4 – 5 and A15 – 26.
OK:

Continuity

HINT:
There is a resistance of 32 – 34 Ω between terminals A4 – 2 and A4 – 5.

NG → **Repair or replace harness or ABS actuator.**

OK

3	Check ABS control (motor) relay.

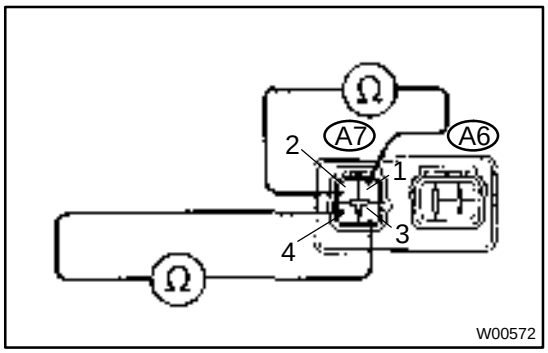

CHECK:

Check continuity between each terminal of ABS control (motor) relay.

OK:

Terminals A7 – 3 and A7 – 4	Continuity (Reference value 62 Ω)
Terminals A7 – 1 and A7 – 2	Open

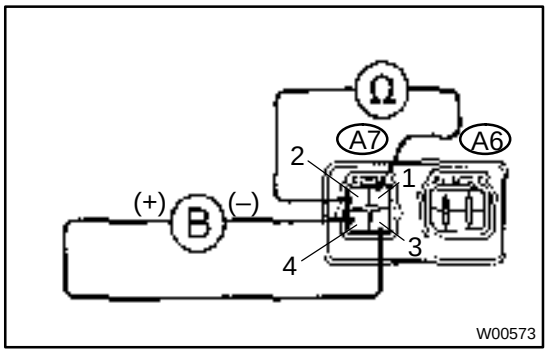

CHECK:

(a) Apply battery voltage between terminals A7 – 3 and A7 – 4.

(b) Check continuity between terminals of ABS control (motor) relay.

OK:

Terminals A7 – 1 and A7 – 2	Continuity

NG → **Replace ABS control relay.**

OK

4	Check for open and short in harness and connector between ABS control relay and ABS ECU (See page IN–27).

NG → **Repair or replace harness or connector.**

OK

If the same code is still output after the DTC is deleted, check the contact condition of each connection. If the connections are normal, the ECU may be defective.

DI4PA–01

DTC	21, 22, 23, 24	ABS Actuator Solenoid Circuit

CIRCUIT DESCRIPTION

This solenoid goes on when signals are received from the ECU and controls the pressure acting on the brake cylinders, thus controlling the braking force.

DTC No.	DTC Detecting Condition	Trouble Area
21	Conditions (1) through (3) continue for 0.05 sec. or more: (1) ABS control (solenoid) relay terminal (SR) voltage: Battery positive voltage (2) Voltage of ABS ECU terminal AST: Battery positive voltage (3) When power transistor of ECU is ON, voltage of terminal SFR is 0 V or battery positive voltage.	• ABS actuator • Open or short in SFR circuit
22	Conditions (1) through (3) continue for 0.05 sec. or more: (1) ABS control (solenoid) relay terminal (SR) voltage: Battery positive voltage (2) Voltage of ABS ECU terminal AST: Battery positive voltage (3) When power transistor of ECU is ON, voltage of terminal SFL is 0 V or battery positive voltage.	• ABS actuator • Open or short in SFL circuit
23	Conditions (1) through (3) continue for 0.05 sec. or more: (1) ABS control (solenoid) relay terminal (SR) voltage: Battery positive voltage (2) Voltage of ABS ECU terminal AST: Battery positive voltage (3) When power transistor of ECU is ON, voltage of terminal SRR is 0 V or battery positive voltage.	• ABS actuator • Open or short in SRR circuit
24	Conditions (1) through (3) continue for 0.05 sec. or more: (1) ABS control (solenoid) relay terminal (SR) voltage: Battery positive voltage (2) Voltage of ABS ECU terminal AST: Battery positive voltage (3) When power transistor of ECU is ON, voltage of terminal SRLis 0 V or battery positive voltage.	• ABS actuator • Open or short in SRL circuit

Fail safe function:

If trouble occurs in the actuator solenoid circuit, the ECU cuts off current to the ABS control (solenoid) relay and prohibits ABS control.

WIRING DIAGRAM

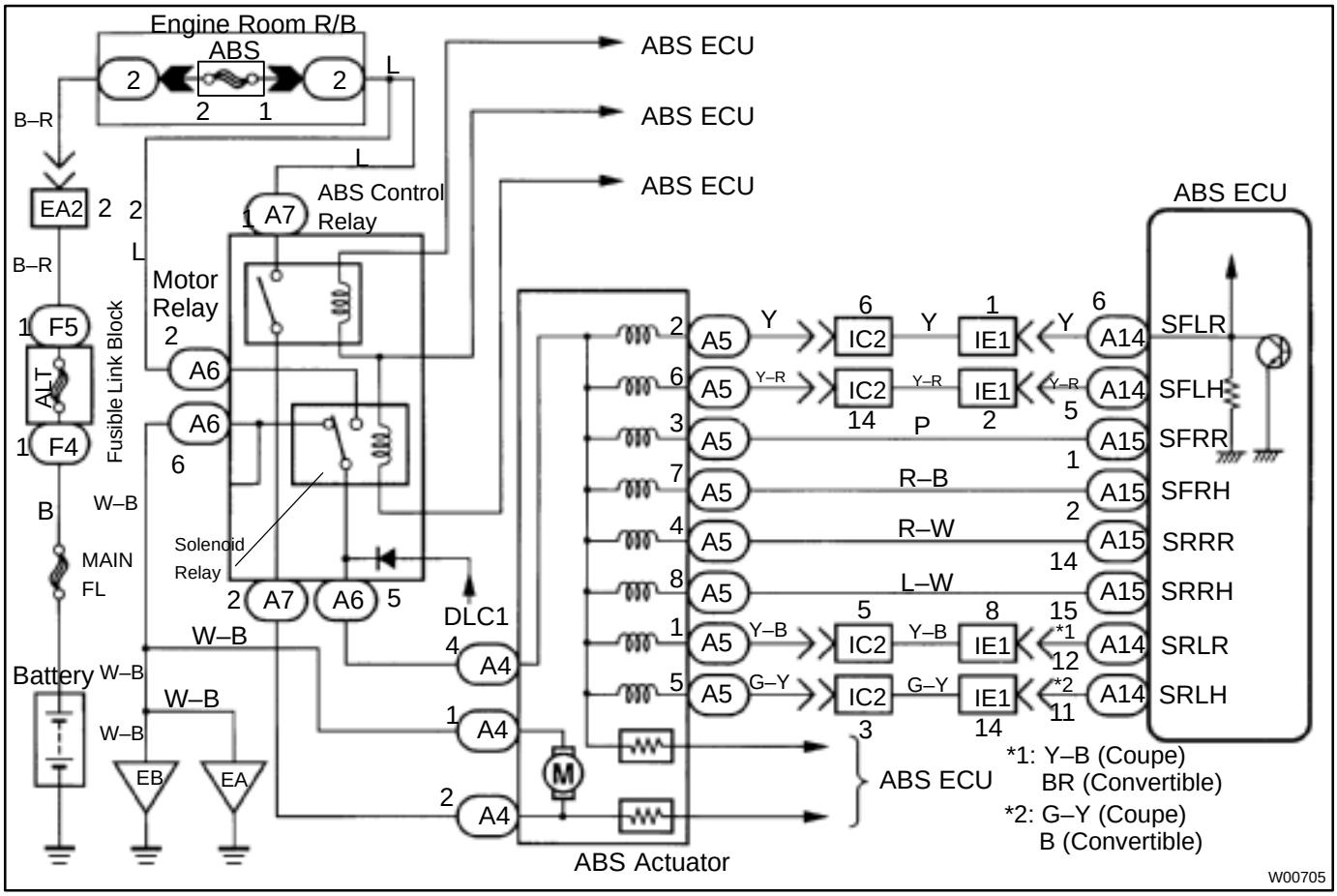

INSPECTION PROCEDURE

1	**Check ABS actuator solenoid.**

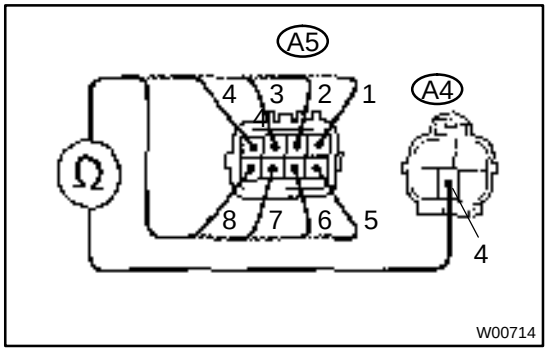

PREPARATION:

Disconnect the 2 connectors from ABS actuator.

CHECK:

Check continuity between terminals A4 – 4 and A5 – 1, 2, 3, 4, 5, 6, 7, 8 of ABS actuator connector.

OK:

Continuity

HINT:

Resistance of each of the solenoids
SFRH, SFLH, SRRH and SRLH is 5.0 Ω
Resistance of each of the solenoids
SFRR, SFLR, SRRR and SRLR is 2.2 Ω

NG	**Replace ABS actuator.**

OK

2	**Check for open and short in harness and connector between ABS ECU and actuator (See page IN–27).**

NG → **Repair or replace harness or connector.**

OK

If the same code is still output after the DTC is deleted, check the contact condition of each connection. If the connections are normal, the ECU may be defective.

DI4PB–01

DTC	31, 32, 33, 34	Speed Sensor Circuit

CIRCUIT DESCRIPTION

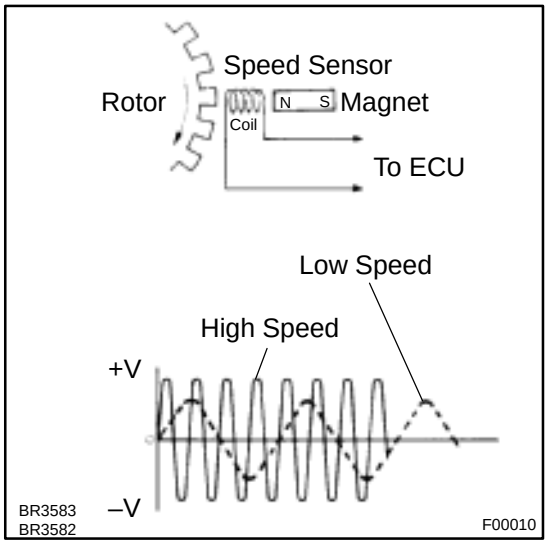

The speed sensor detects the wheel speed and sends the appropriate signals to the ECU. These signals are used to control the ABS system. The front and rear rotors each have 48 serrations.

When the rotors rotate, the magnetic field emitted by the permanent magnet in the speed sensor generates an AC voltage. Since the frequency of this AC voltage changes in direct proportion to the speed of the rotors, the frequency is used by the ECU to detect the speed of each wheel.

DTC No.	DTC Detecting Condition	Trouble Area
31, 32, 33, 34	Detection of any of conditions (1) through (3): (1) At vehicle speed of 10 km/h (6 mph) or more, pulses are not input for 5 sec. (2) Momentary interruption of the speed sensor signal occurs at least 7 times in the time between switching the ignition switch ON and switching it OFF. (3) Abnormal fluctuation of speed sensor signals with the vehicle speed 20 km/h (12 mph) or more.	• Right front, left front, right rear, left rear speed sensor • Open or short in each speed sensor circuit • Sensor rotor

HINT:

DTC No. 31 is for the right front speed sensor.

DTC No. 32 is for the left front speed sensor.

DTC No. 33 is for the right rear speed sensor.

DTC No. 34 is for the left rear speed sensor.

Fail safe function:

If trouble occurs in the speed sensor circuit, the ECU cuts off current to the ABS control (solenoid) relay and prohibits ABS control.

WIRING DIAGRAM

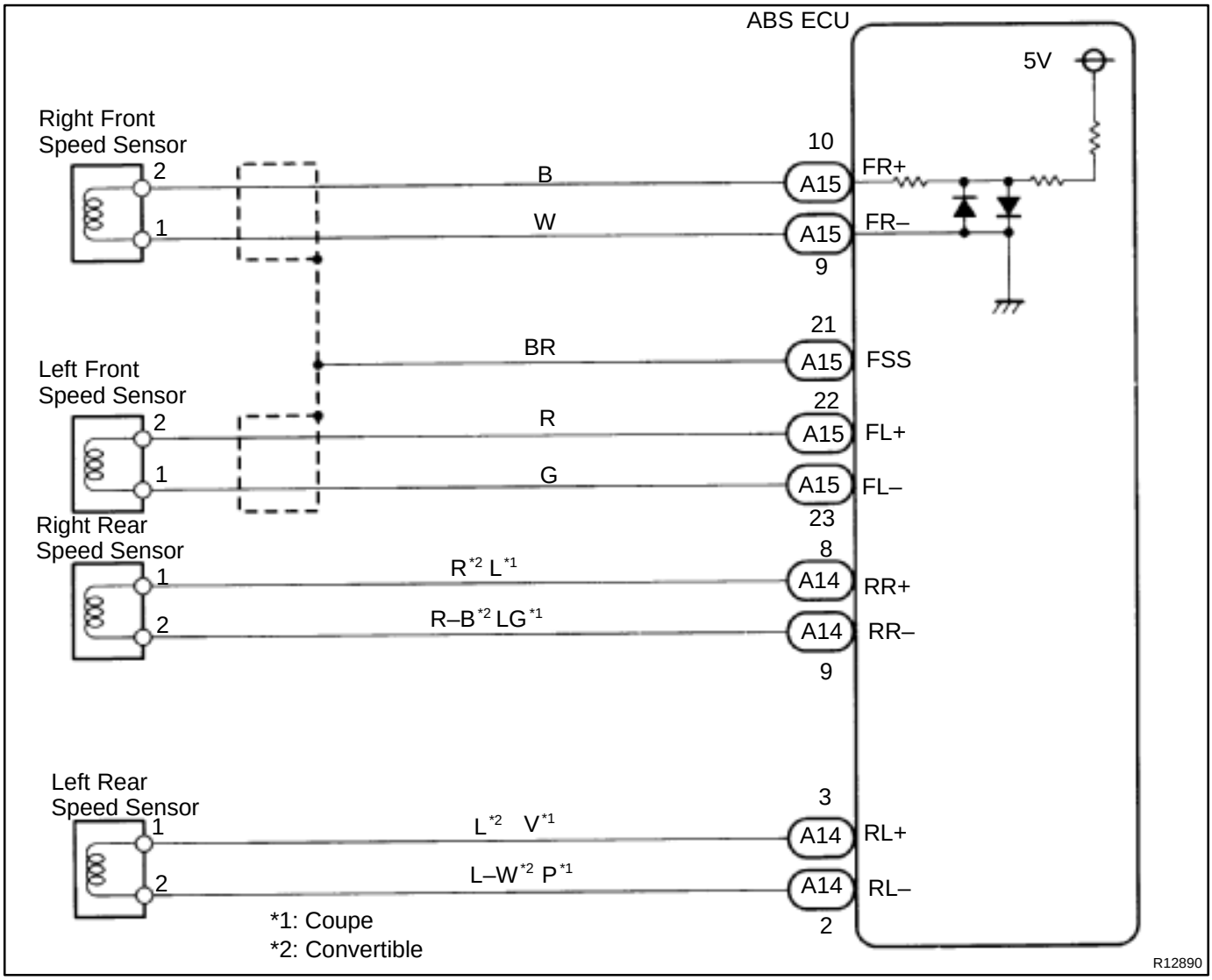

INSPECTION PROCEDURE

1	**Check speed sensor.**

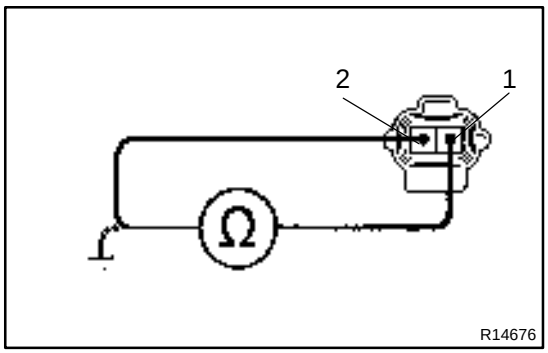

Front

PREPARATION:

Disconnect speed sensor connector.

CHECK:

Measure resistance between terminals 1 and 2 of speed sensor connector.

OK:

Resistance: 0.6 – 2.5 kΩ

CHECK:

Measure resistance between terminals 1 and 2 of speed sensor connector and body ground.

OK:

Resistance: 1 MΩ or higher

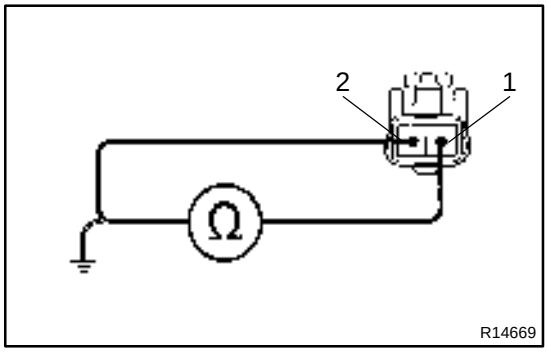

Rear

PREPARATION:

Disconnect speed sensor connector.

CHECK:

Measure resistance between terminals 1 and 2 of speed sensor connector.

OK:

Resistance: 0.8 – 1.8 kΩ

CHECK:

Measure resistance between terminals 1 and 2 of speed sensor connector and body ground.

OK:

Resistance: 1 MΩ or higher

NG	**Replace speed sensor.**

NOTICE:

Check the speed sensor signal last (See page DI–173).

OK

2	**Check for open and short in harness and connector between each speed sensor and ECU (See page IN–27).**

NG → **Repair or replace harness or connector.**

OK

3	Check sensor rotor and sensor installation.

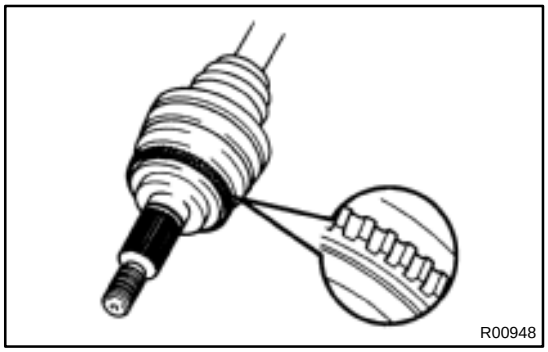

Front

PREPARATION:

Remove the drive shaft (See page SA–18).

CHECK:

Check the sensor rotor serrations.

OK:

No scratches or missing teeth.

CHECK:

Check the sensor tip.

OK:

No scratches or foreign objects on the sensor tip.

CHECK:

Check the front speed sensor installation.

OK:

The installation bolt is tightened properly and there is no clearance between the sensor and steering knuckle.

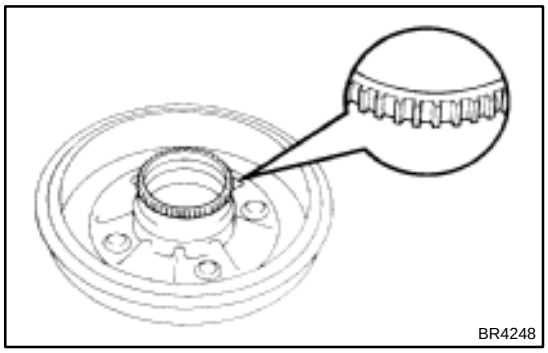

Rear

PREPARATION:

Remove the drum (See page SA–42).

CHECK:

Check the sensor rotor serrations.

OK:

No scratches or missing teeth.

CHECK:

Check the sensor tip.

OK:

No scratches or foreign objects on the sensor tip.

CHECK:

Check the rear speed sensor installation.

OK:

The installation bolt is tightened properly and there is no clearance between the sensor and rear axle carrier.

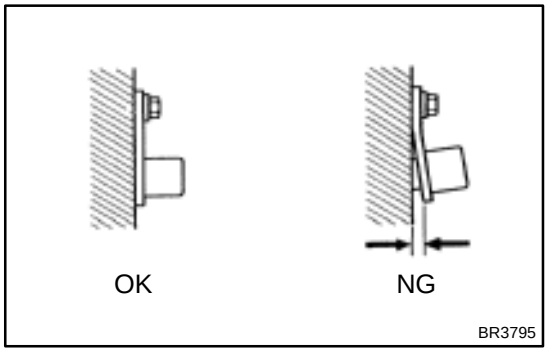

NG → **Replace speed sensor or rotor.**

NOTICE:

Check the speed sensor signal last (See page DI–173).

OK

Check and replace ABS ECU.

DI4PF–01

ABS Warning Light Circuit

CIRCUIT DESCRIPTION

If the ECU detects trouble, it lights the ABS warning light while at the same time prohibiting ABS control. At this time, the ECU records a DTC in memory.
After removing the short pin of the DLC1, connect between terminals Tc and E1 of the DLC1 to make the ABS warning light blink and output the DTC.

WIRING DIAGRAM

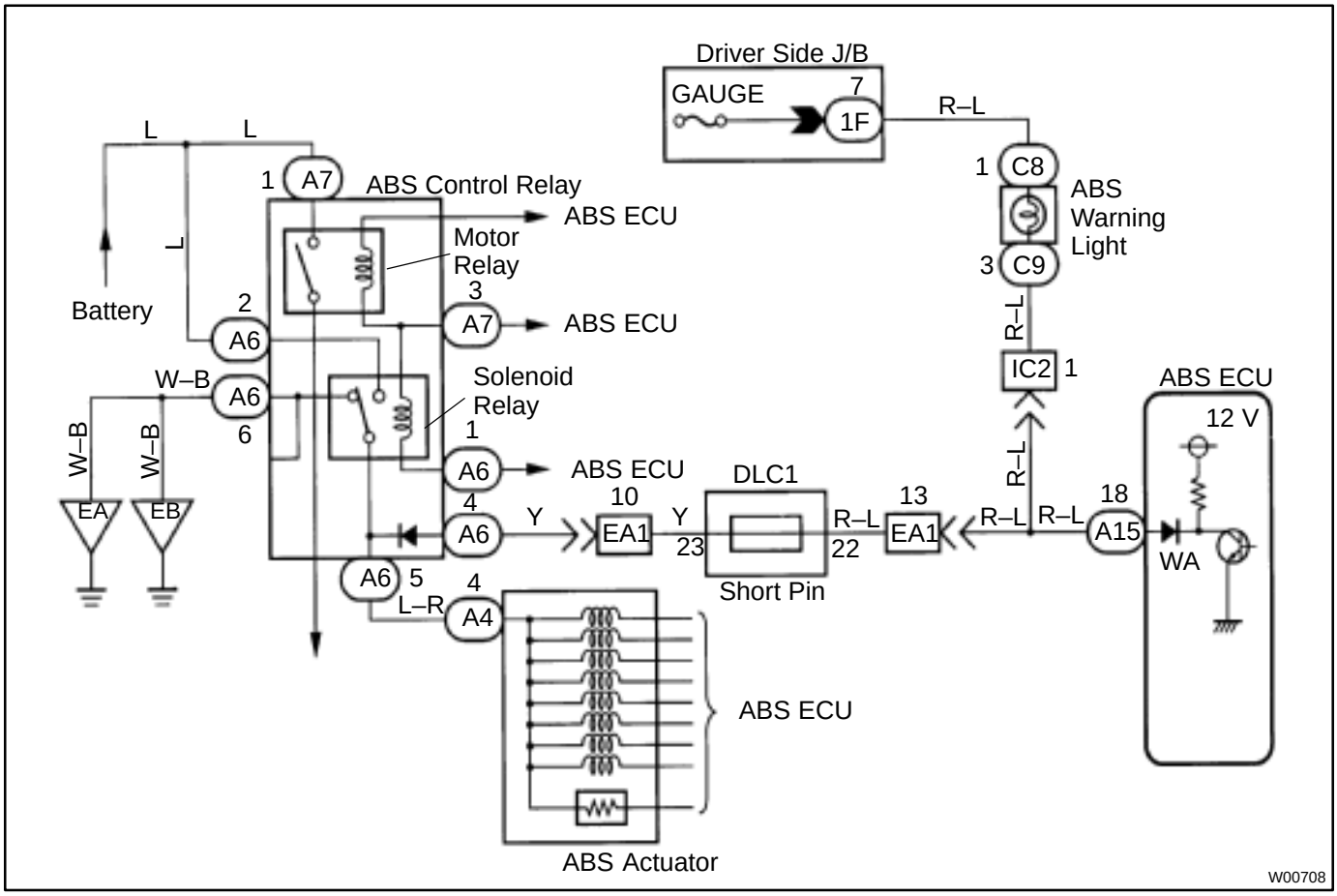

W00708

INSPECTION PROCEDURE

Troubleshoot in accordance with the chart below for each trouble symptom.

ABS warning light does not light up	Go to step 1
ABS warning light remains on	Go to step 3

1	**Check ABS warning light.**

See Combination Meter Troubleshooting on page BE–2.

NG → **Repair bulb or combination meter assembly.**

OK

2	Check ABS control relay.

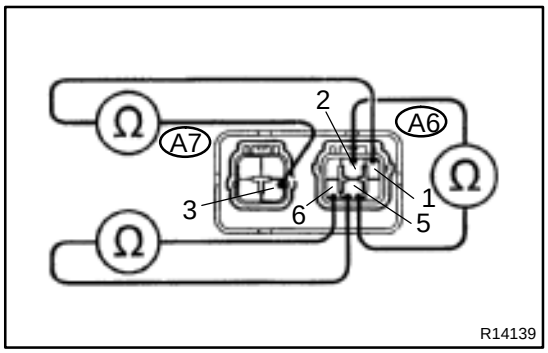

PREPARATION:

Disconnect the connectors from control relay.

CHECK:

Check continuity between each terminal of ABS control relay.

OK:

Terminals A6 – 1 and A7 – 3	Continuity (Reference value 80 Ω)
Terminals A6 – 5 and A6 – 6	Continuity
Terminals A6 – 2 and A6 – 5	Open

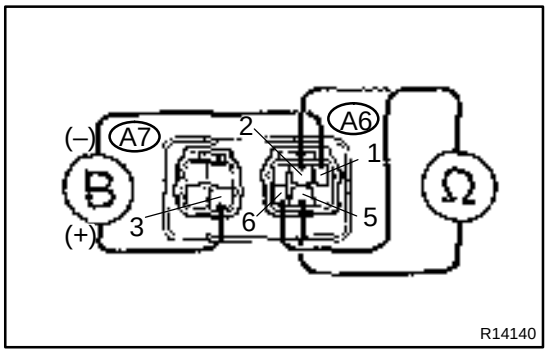

CHECK:

(a) Apply battery voltage between terminals A6 – 1 and A7 – 3.

(b) Check continuity between each terminal of ABS control relay.

OK:

Terminals A6 – 5 and A6 – 6	Open
Terminals A6 – 2 and A6 – 5	Continuity

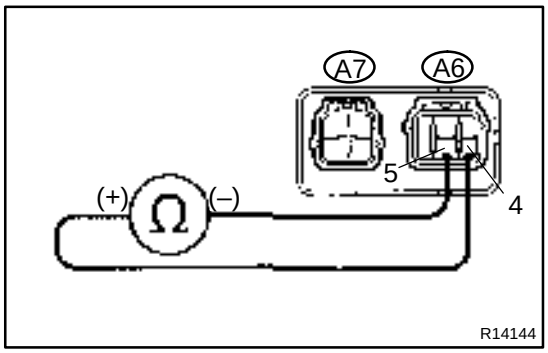

CHECK:

Connect the ⊕ test lead to terminal 4 of A6 and the ⊖ lead to terminal 5 of A6. Check continuity between the terminals.

OK:

Continuity

If there is no continuity, connect the ⊖ test lead to terminal 4 of A6 and the ⊕ lead to terminal 5 of A6. Recheck continuity between terminals.

NG → **Replace ABS control relay.**

OK

Repair or replace and check for open in harness and connector between DLC1 and ABS control relay and body ground (See page IN–27).

3	**Is DTC output?**

Check DTC on page DI–173.

YES → **Repair circuit indicated by the code output.**

NO

4	**Does ABS warning light go off if short pin is removed?**

NO → **Check for short in harness and connector between warning light and DLC1 and ECU (See page IN–27).**

YES

5	**Check ABS control relay (See step 2).**

NG → **Replace ABS control relay.**

OK

Repair or replace and check for short in harness and connector between DLC1 and ABS control relay (See page IN–27).

DI7HI–01

Check for Fluid Leakage

Check for fluid leakage from actuator or hydraulic lines.

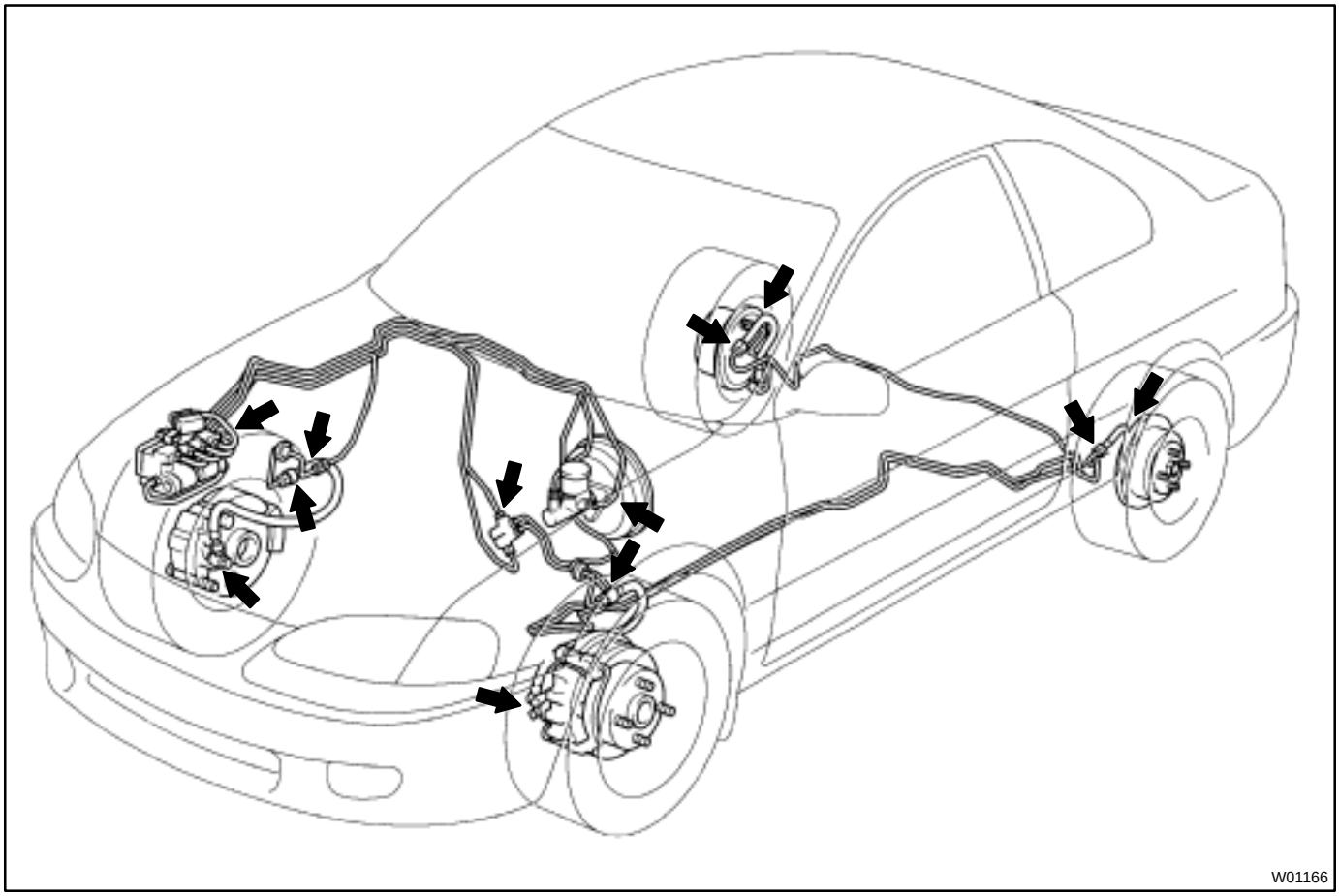

DI4PE–01

Stop Light Switch Circuit

CIRCUIT DESCRIPTION

This stop light switch senses whether the brake pedal is depressed or released, and sends the signal to the ECU.

WIRING DIAGRAM

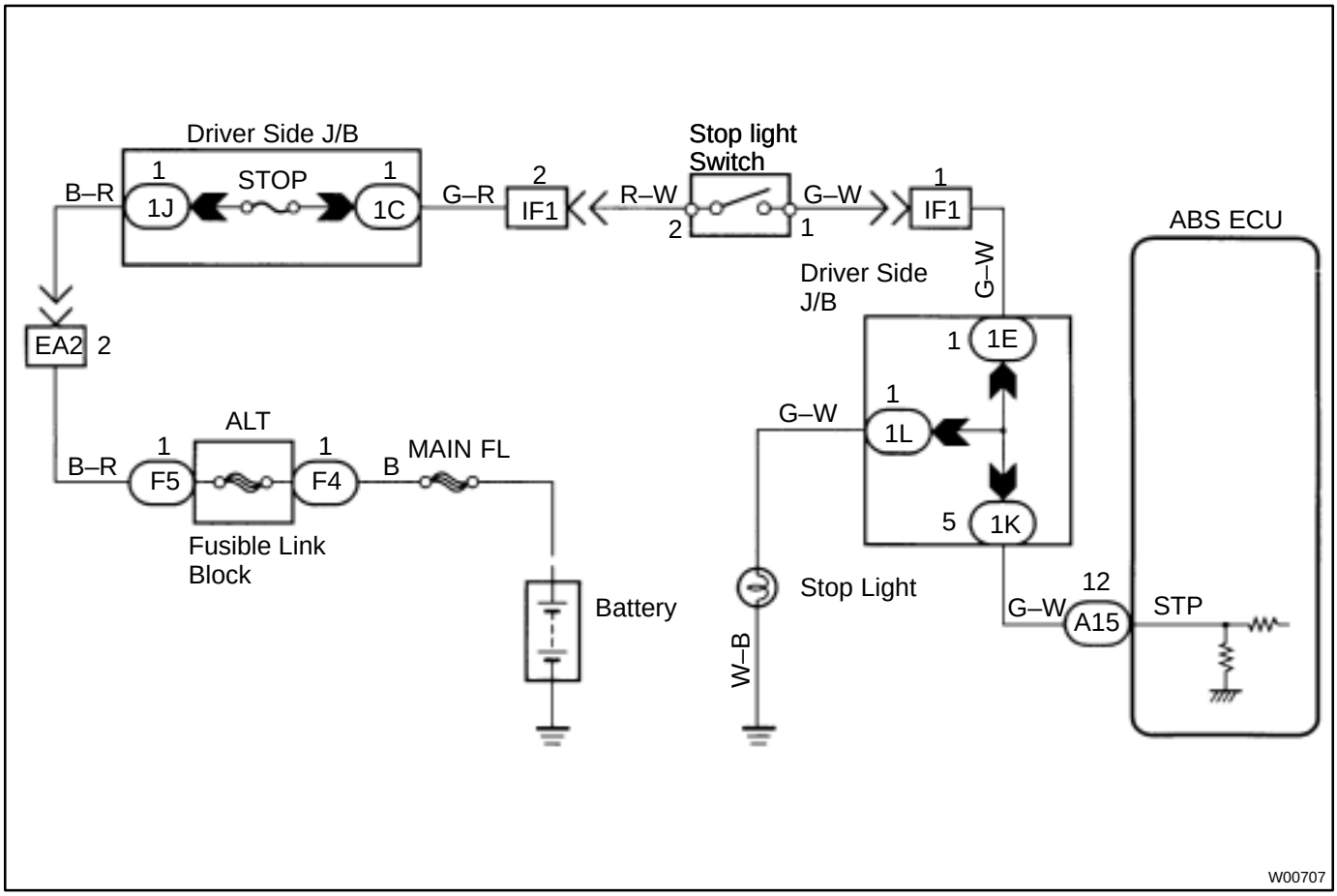

INSPECTION PROCEDURE

1	**Check operation of stop light.**

CHECK:

Check that stop light lights up when brake pedal is depressed and turns off when brake pedal is released.

NG → **Repair stop light circuit (See page BE–27).**

OK

2	**Check voltage between terminal STP of ABS ECU and body ground.**

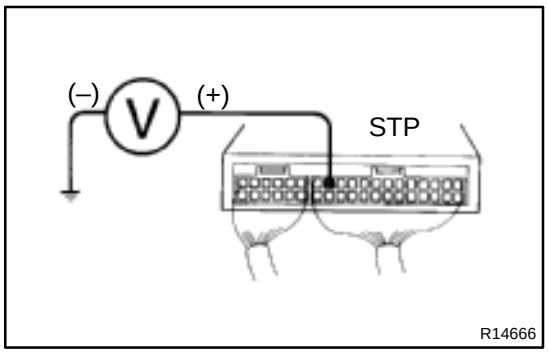

PREPARATION:
Remove ABS ECU with connectors still connected.
CHECK:
Measure voltage between terminal STP of ABS ECU and body ground when brake pedal is depressed.
OK:
Voltage: 8 – 14 V

OK → **Proceed to next circuit inspection shown on problem symptoms chart (See page DI–178).**

NG

3	**Check for open in harness and connector between ABS ECU and stop light switch (See page IN–27).**

NG → **Repair or replace harness or connector.**

OK

Check and replace ABS ECU.

DI4PG–01

Tc Terminal Circuit

CIRCUIT DESCRIPTION

Connecting between terminals Tc and E1 of the DLC1 causes the ECU to display the DTC by flashing the ABS warning light.

WIRING DIAGRAM

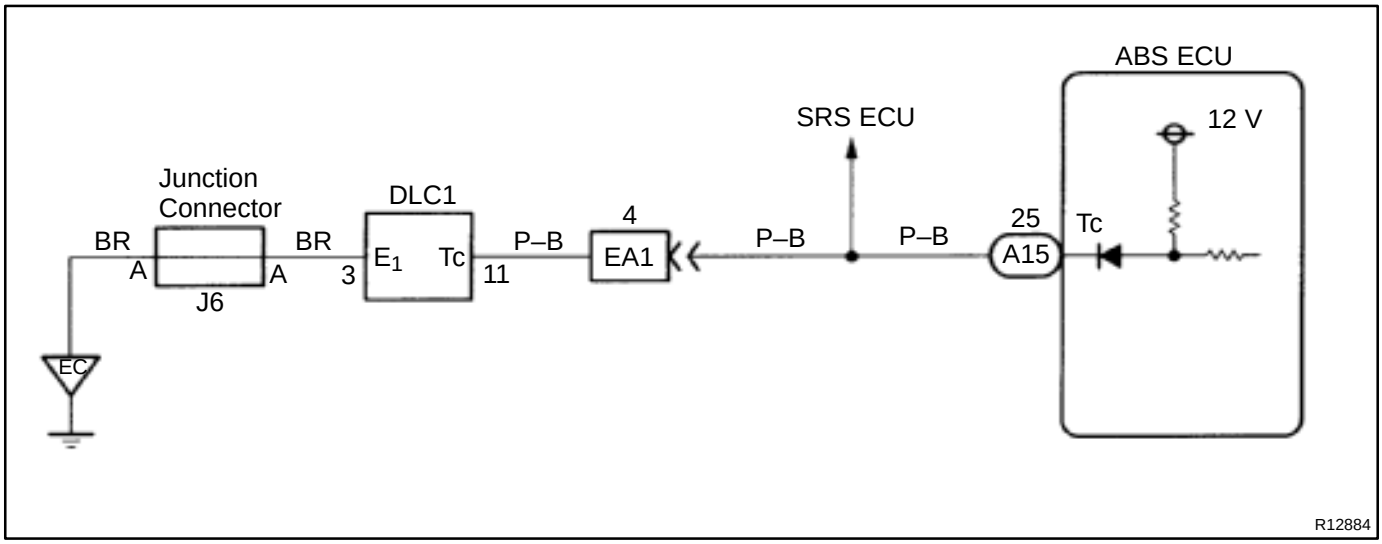

INSPECTION PROCEDURE

1	**Check voltage between terminals Tc and E_1 of DLC1.**

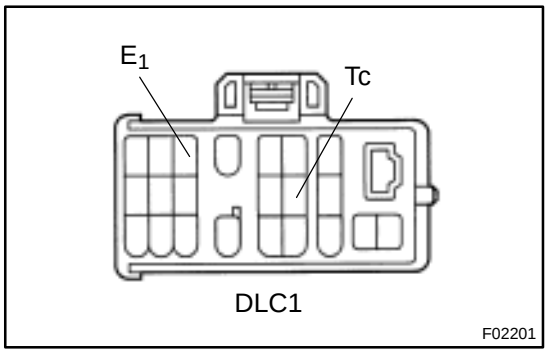

CHECK:

(a) Turn ignition switch ON.

(b) Measure voltage between terminals Tc and E1 of the DLC1.

OK:

Voltage: 10 – 14 V

OK → **If ABS warning light does not blink even after Tc and E1 are connected, the ECU may be defective.**

NG

2	**Check for open and short in harness and connector between ABS ECU and DLC1, DLC1 and body ground (See page IN–27).**

NG → **Repair or replace harness or connector.**

OK

Check and replace ABS ECU.

Ts Terminal Circuit

CIRCUIT DESCRIPTION

The sensor check circuit detects abnormalities in the speed sensor signal which cannot be detected with the DTC check.
Connecting terminals Ts and E_1 of the DLC1 in the engine compartment starts the check.

WIRING DIAGRAM

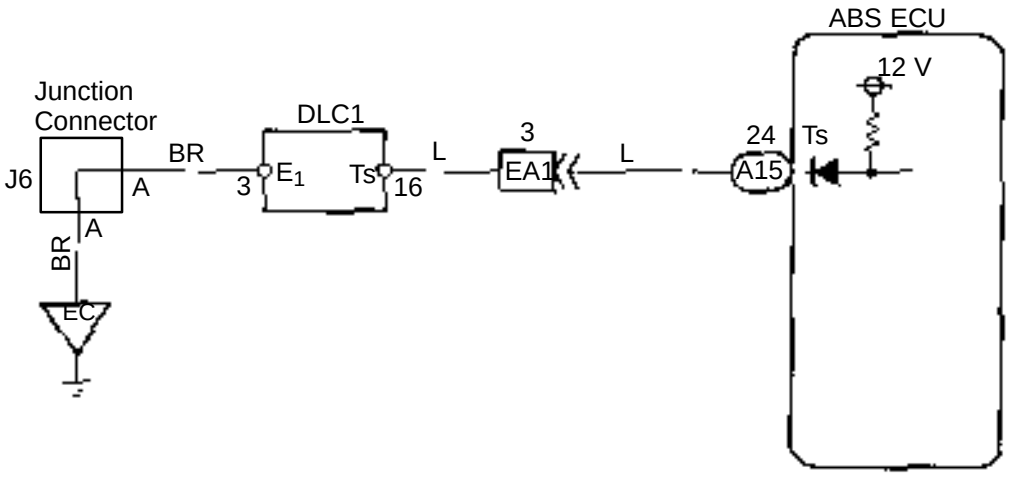

INSPECTION PROCEDURE

1	**Check voltage between terminals Ts and E_1 of DLC1.**

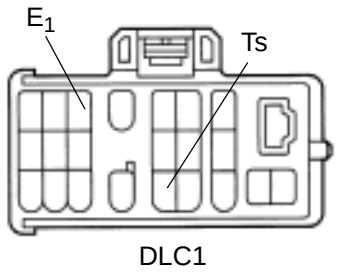

CHECK:

(a) Turn ignition switch ON.
(b) Measure voltage between terminals Ts and E1 of the DLC1.

OK:

Voltage: 10 – 14 V

OK → **If ABS warning light does not blink even after Ts and E1 are connected, the ECU may be defective.**

NG

2	**Check for open and short in harness and connector between ABS ECU and DLC1, DLC1 and body ground (See page IN–27).**

NG → **Repair or replace harness or connector.**

OK

Check and replace ABS ECU.

DI15G–04

CUSTOMER PROBLEM ANALYSIS CHECK

ABS Check Sheet

Inspector's name :

Customer's Name		**Registration No.**	
		Registration Year	/ /
		Frame No.	
Date Vehicle Brought In	/ /	**Odometer Reading**	km miles

Date Problem First Occurred	/ /
Frequency Problem Occurs	☐ Continuously ☐ Intermittently (times a day)

Symptoms	☐ ABS does not operate.	
	☐ ABS does not operate efficiently.	
	ABS Warning Light Abnormal	☐ Remains ON ☐ Does not Light Up

DTC Check	**1st Time**	☐ Normal Code ☐ Malfunction Code (Code)
	2nd Time	☐ Normal Code ☐ Malfunction Code (Code)

DI4P4–01

DIAGNOSTIC TROUBLE CODE CHART

HINT:

- Using SST 09843–18020, connect the terminals Tc and E1, and remove the short pin.
- If any abnormality is not found when inspection parts, inspect the ECU.

If a malfunction code is displayed during the DTC check, check the circuit listed for that the code. For details of each code, turn to the page referred to under the "See page" for the respective "DTC No." in the DTC chart.

DTC No. (See Page)	Detection Item	Trouble Area
11 (DI–179)	Open circuit in ABS control (solenoid) relay circuit	• ABS control (solenoid) relay • Open or short in ABS control (solenoid) relay circuit
12 (DI–179)	Short circuit in ABS control (solenoid) relay circuit	• ABS control (solenoid) relay • B+ short in ABS control (solenoid) relay circuit
13 (DI–182)	Open circuit in ABS control (motor) relay circuit	• ABS control (motor) relay • Open or short in ABS control (motor) relay circuit
14 (DI–182)	Short circuit in ABS control (motor) relay circuit	• ABS control (motor) relay • B+ short in ABS control (motor) relay circuit
21 (DI–185)	Open or short circuit in solenoid circuit for right front wheel	• ABS actuator • Open or short in SFR circuit
22 (DI–185)	Open or short circuit in solenoid circuit for left front wheel	• ABS actuator • Open or short in SFL circuit
23 (DI–185)	Open or short circuit in solenoid circuit for right rear wheel	• ABS actuator • Open or short in SRR circuit
24 (DI–185)	Open or short circuit in solenoid circuit for left rear wheel	• ABS actuator • Open or short in SRL circuit
31 (DI–188)	Right front wheel speed sensor signal malfunction	• Right front, left front, right rear and left rear speed sensor • Open or short in each speed sensor circuit • Senser rotor
32 (DI–188)	Left front wheel speed sensor signal malfunction	
33 (DI–188)	Right rear wheel speed sensor signal malfunction	
34 (DI–188)	Left rear wheel speed sensor signal malfunction	
41 (DI–194)	Low battery positive voltage or abnormally high battery positive voltage	• Battery • IC regulator • Open or short in power source circuit
51 (DI–197)	Pump motor is locked Open in pump motor ground	• ABS pump motor
Always ON	Malfunction in ECU	• ECU

ANTI–LOCK BRAKE SYSTEM

DI4P1–01

HOW TO PROCEED WITH TROUBLESHOOTING

Troubleshooot in accordance with the procedure on the following pages.

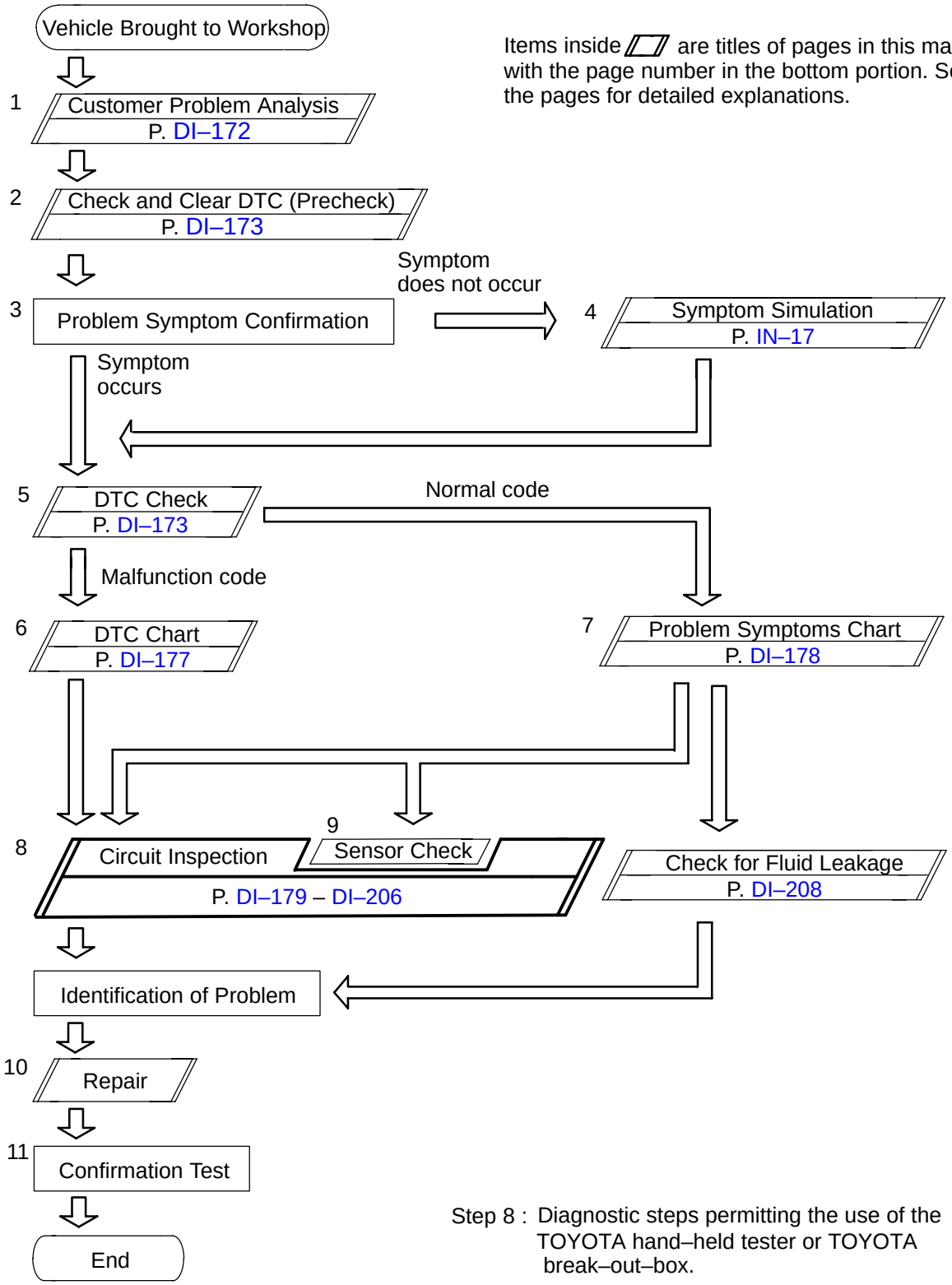

Items inside ▱ are titles of pages in this manual, with the page number in the bottom portion. See the pages for detailed explanations.

Step 8 : Diagnostic steps permitting the use of the TOYOTA hand–held tester or TOYOTA break–out–box.

DI4P3–01

PRE–CHECK

1. DIAGNOSIS SYSTEM

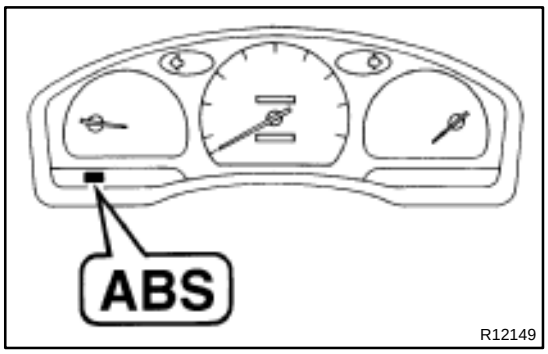

(a) Check the indicator

When the ignition switch is turned ON, check that the ABS warning light goes on for 3 seconds.

HINT:

If the indicator check result is not normal, proceed to trouble-shooting for the ABS warning light circuit (See page DI–201).

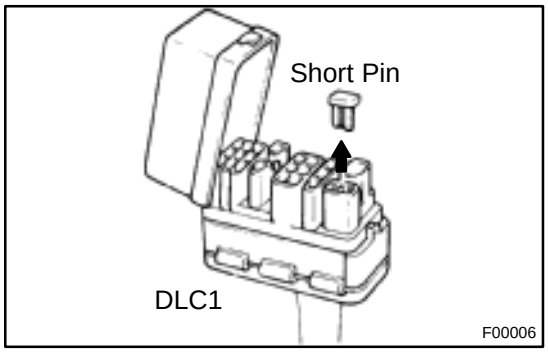

(b) Check the DTC

(1) Turn the ignition switch ON.

(2) Disconnect the short pin from the DLC1.

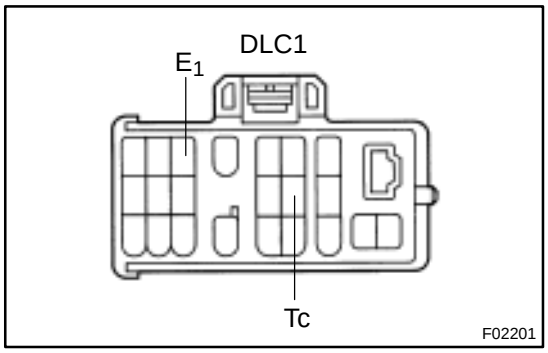

(3) Using SST, connect terminals Tc and E1 of the DLC1.

SST 09843–18020

(4) Read the DTC from the ABS warning light on the combination meter.

HINT:

If no code appears, inspect the diagnostic circuit or ABS warning light circuit (See page DI–204 or DI–201).

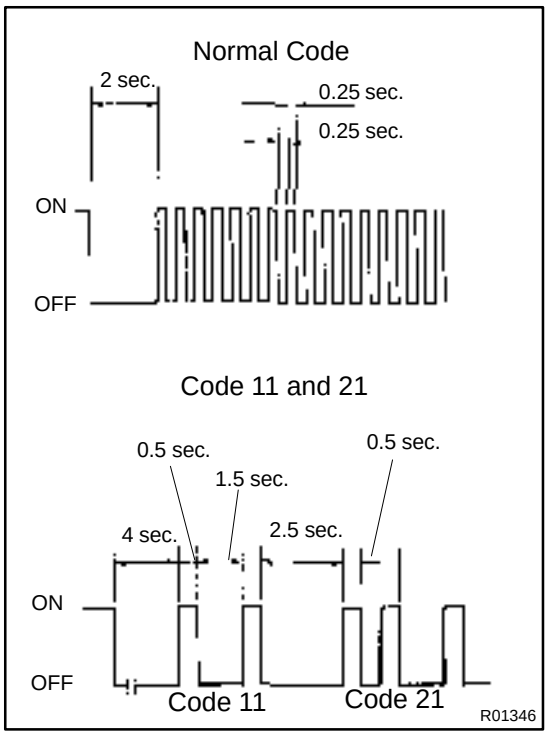

As an example, the blinking patterns for normal code and codes 11 and 21 are shown on the left.

(5) Code are explained in the code table on page DI–177.

(6) After completing the check, disconnect terminals Tc and E1, and turn off the display.

If 2 or more malfunctions are indicated at the same time, the lowest numbered DTC will be displayed 1st.

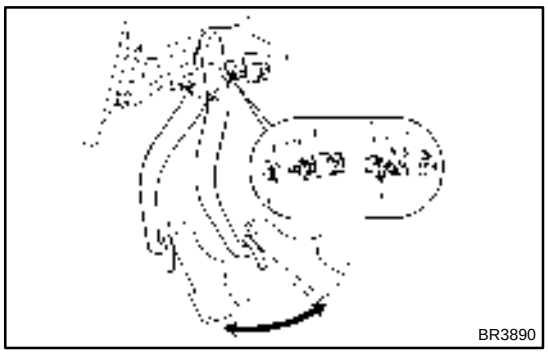

(c) Clear the DTC
(1) Using SST, connect terminals Tc and E1 of the DLC1.
SST 09843–18020
(2) Disconnect the short pin from the DLC1.
(3) IG switch ON.
(4) Clear the DTC stored in ECU by depressing the brake pedal 8 or more times within 3 seconds.
(5) Check that the warning light shows the normal code.
(6) Remove the SST from the terminals of or the DLC1.
(7) Connect the short pin to the DLC1.
SST 09843–18020

HINT:
Cancellation can also be done by removing the DOME fuse, but in this case, other memory systems will also be cancelled out.

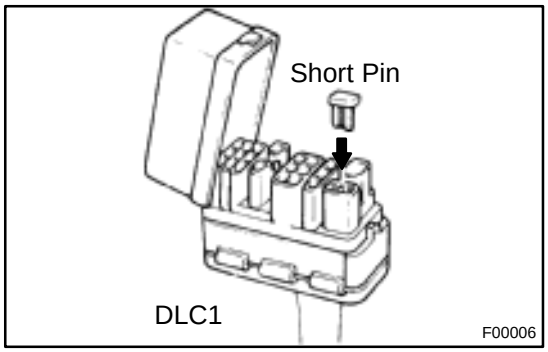

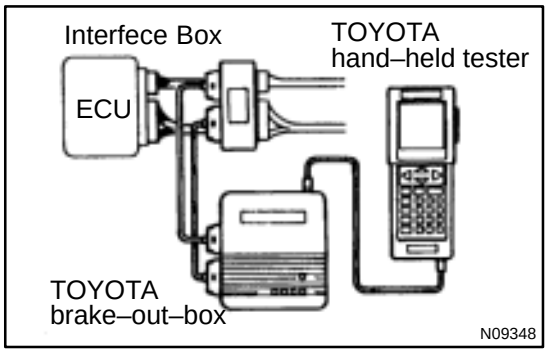

(d) Using TOYOTA break–out box and TOYOTA hand–held tester, measure the ECU terminal values.
(1) Turn the IG switch OFF.
(2) Hook up the TOYOTA hand–held tester and TOYOTA break–out–box to the vehicle.
(3) Turn the IG switch ON.
(4) Read the ECU input/output values by following the prompts on the tester screen.

HINT:
TOYOTA hand–held tester has a ”Snapshot” function. This records the measured values and is effective in the diagnosis of intermittent problems.
Please refer to the TOYOTA hand–held tester/TOYOTA break–out–box operator’s manual for further details.

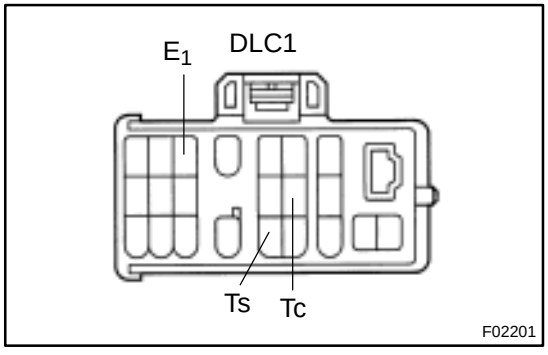

2. SPEED SENSOR SIGNAL

(a) Speed sensor signal check.
(1) Turn the ignition switch OFF.
(2) Using SST, connect terminals Ts and E_1 of the DLC1.
SST 09843–18020
(3) Start the engine.

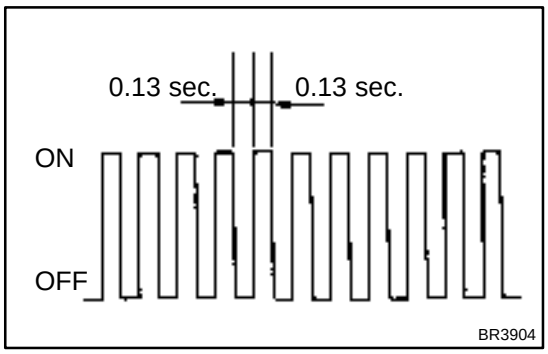

(4) Check that the ABS warning light blinks.

HINT:

If the ABS warning light does not blink, inspect the ABS warning light circuit (See page DI–201).

(5) Drive vehicle faster than 45 km/h (28 mph) for several seconds.

(6) Stop the vehicle.

(7) Using SST, connect terminals Tc and E_1 of the DLC1.

SST 09843–18020

(8) Read the number of blinks of the ABS warning light.

HINT:

See the list of DTC shown on the next page.

- If every sensor is normal, a normal code is output (A cycle of 0.25 sec. ON and 0.25 sec. OFF is repeated).
- If 2 or more malfunctions are indicated at the same time, the lowest numbered code will be displayed 1st.

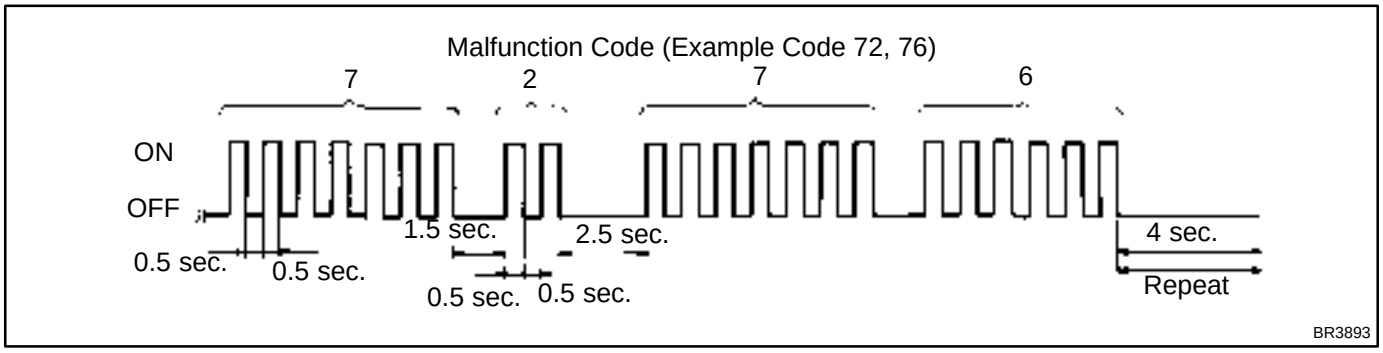

(9) After doing the check, disconnect terminals Ts and E1, Tc and E1 of the DLC1, and turn ignition switch OFF.

(b) DTC of speed sensor check function.

Code No.	Diagnosis	Trouble Area
71	Low output voltage of right front speed sensor	• Right front speed sensor • Sensor installation • Sensor rotor
72	Low output voltage of left front speed sensor	• Left front speed sensor • Sensor installation • Sensor rotor
73	Low output voltage of right rear speed sensor	• Right rear speed sensor • Sensor installation • Sensor rotor
74	Low output voltage of left rear speed sensor	• Left rear speed sensor • Sensor installation • Sensor rotor
75	Abnormal change in output voltage of right front speed sensor	• Right front speed sensor rotor
76	Abnormal change in output voltage of left front speed sensor	• Left front speed sensor rotor
77	Abnormal change in output voltage of right rear speed sensor	• Right rear speed sensor rotor
78	Abnormal change in output voltage of left rear speed sensor	• Left rear speed sensor rotor

DI4P7–01

PROBLEM SYMPTOMS TABLE

If a normal code is displayed during the DTC check but the problem still occurs, check the circuits for each problem symptom in the order given in the table below and proceed to the relevant page for troubleshooting.

NOTICE:

When removing the ECU, turn the IG switch OFF.

Symptoms	Inspection Circuit	See page
ABS does not operate.	Only when 1. – 4. are all normal and the problem is still occurring, replace the ABS ECU. 1. Check the DTC reconfirming that the normal code is output. 2. IG power source circuit. 3. Speed sensor circuit. 4. Check the ABS actuator with a checker. If abnormal, check the hydraulic circuit for leakage (See page Leakage).	 DI–173 DI–194 DI–188 BR–36
ABS does not operate efficiently.	Only when 1. – 4. are all normal and the problem is still occurring, replace the ABS ECU. 1. Check the DTC reconfirming that the normal code is output. 2. Speed sensor circuit. 3. Stop light switch circuit. 4. Check the ABS actuator with a checker. If abnormal, check the hydraulic circuit for leakage (See page Leakage).	 DI–173 DI–188 DI–199 BR–36
ABS warning light abnormal.	1. ABS warning light circuit. 2. ABS ECU.	DI–201
DTC check cannot be done.	Only when 1. and 2. are all normal and the problem is still occurring, replace the ABS ECU. 1. ABS warning light circuit. 2. Tc terminal circuit.	 DI–201 DI–204
Speed sensor signal check cannot be done.	1. Ts terminal circuit. 2. ABS ECU.	DI–206

DI4P0–02

O/D Cancel Signal Circuit

CIRCUIT DESCRIPTION

While driving uphill with cruise control activated, in order to minimize gear shifting and provide smooth cruising, O/D may be prohibited temporarily under some conditions.
The cruise control ECU sends O/D cut signals to the ECM as necessary and the ECM cancels O/D shifting until these signals are discontinued.

WIRING DIAGRAM

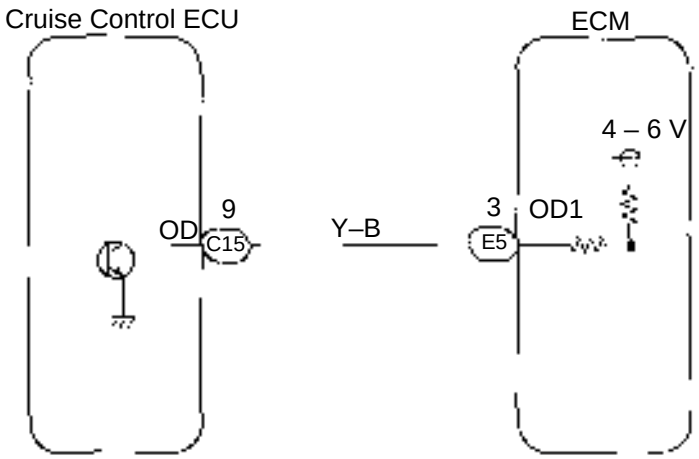

Q05352

INSPECTION PROCEDURE

1	**Check voltage between terminal OD1 of ECM and body ground.**

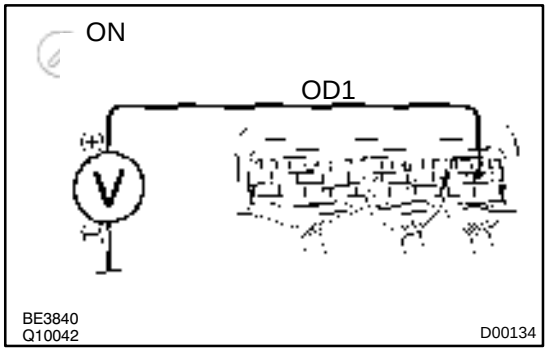

BE3840
Q10042

D00134

PREPARATION:
Turn the ignition switch ON.
CHECK:
Measure voltage between terminal OD1 of ECM and body ground.
OK:

Voltage: 9 – 14 V

OK → **Proceed to next circuit inspection shown on matrix chart (See page DI–140).**

NG

2	Check voltage between terminal OD of cruise control ECU harness side connector and body ground.

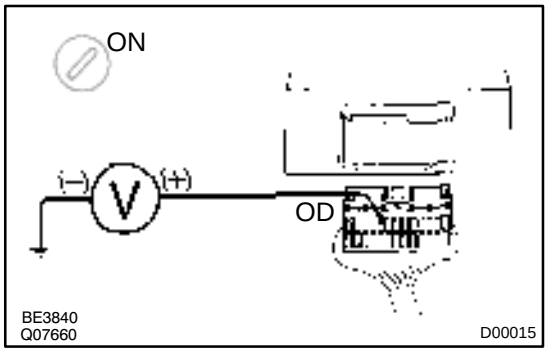

PREPARATION:

(a) Disconnect cruise control ECU connector.

(b) Turn the ignition switch ON.

CHECK:

Measure voltage between terminal OD of cruise control ECU harness side connector and body ground.

OK:

Voltage: 4 – 6 V

OK → **Check and replace the cruise control ECU.**

NG

3	Check harness and connector between cruise control ECU and ECM (See page IN–27).

NG → **Repair or replace harness or connector.**

OK

Check and replace ECM.

DI4OZ–02

O/D Main Switch & O/D OFF Indictor Light Circuit

CIRCUIT DESCRIPTION

The O/D main switch contacts go open when the switch is pushed in and go closed when it is pushed once again. In O/D main switch OFF position, the O/D OFF indicator lights up, and the ECM prohibits shifting to O/D.

WIRING DIAGRAM

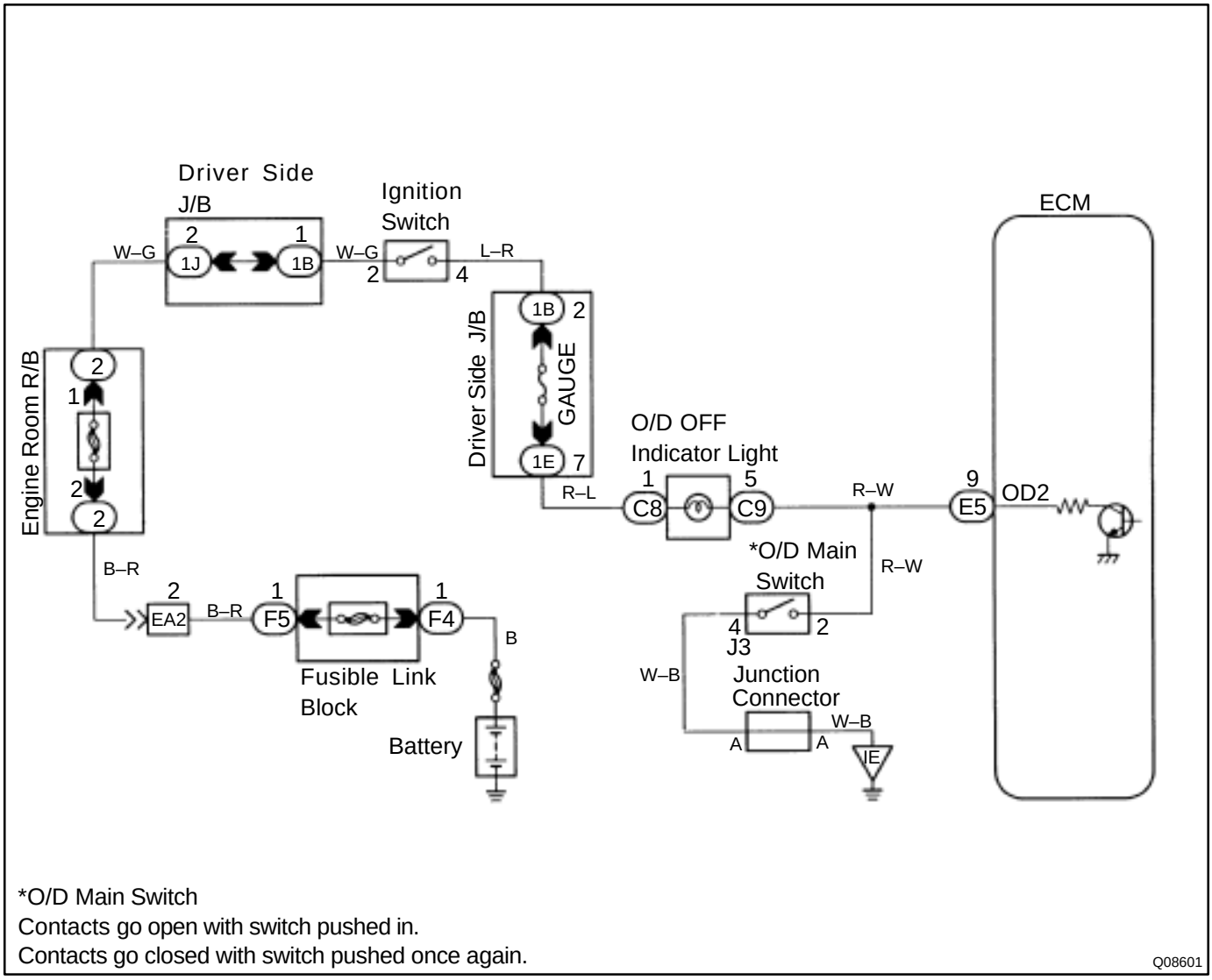

*O/D Main Switch
Contacts go open with switch pushed in.
Contacts go closed with switch pushed once again.

Q08601

INSPECTION PROCEDURE
O/D OFF indicator light does not light up

1	**Check operation of O/D Main Switch.**

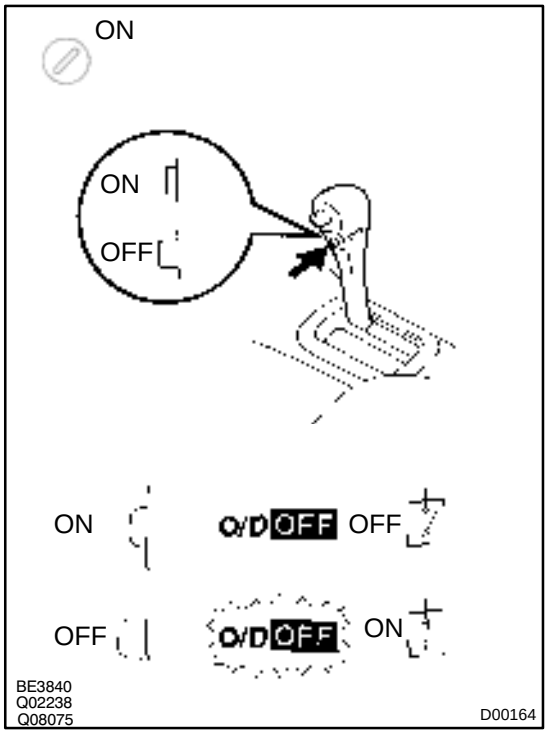

PREPARATION:

(a) Turn the ignition switch ON.

(b) Check "O/D OFF" indicator light when O/D main switch is pushed to ON.

OK:

"O/D OFF" indicator light goes off

CHECK:

Check the "O/D OFF" indicator light when O/D main switch is pushed again, to OFF.

OK:

"O/D OFF" indicator light lights up

NG → **Go to step 4.**

OK

2	Check OVRDRIVE CUT SW2 signal.

When using TOYOTA hand–held tester:

PREPARATION:

(a) Connect the TOYOTA hand–held tester to the DLC3.

(b) Turn the ignition switch ON and TOYOTA hand–held tester main switch ON.

CHECK:

Read the OD2 signal on the TOYOTA hand–held tester.

OK:

O/D main switch pushed in:
OVRDRIVE CUT SW2 ..... ON
O/D main switch pushed once again:
OVRDRIVE CUT SW2 ..... OFF

When not using TOYOTA hand–held tester:

PREPARATION:

Turn the ignition switch ON.

CHECK:

Check voltage between terminal OD2 of ECM and body ground.

OK:

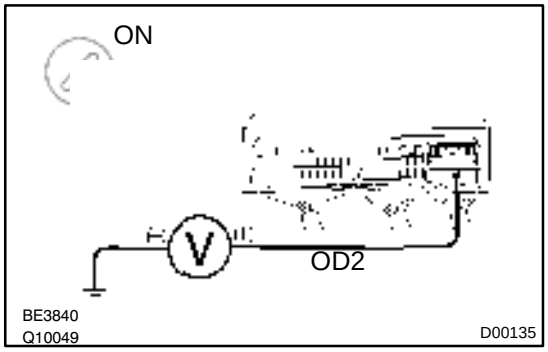

O/D Main Switch	Voltage
OFF	Below 3 V
ON	9 – 14 V

OK → **Proceed to next circuit inspection shown on matrix chart (See page DI–140).**

NG

3	Check harness and connector between O/D OFF indicator light and ECM (See page IN–27).

NG → **Repair or replace harness or connector.**

OK

Check and replace ECM.

4	Check O/D Main Switch.

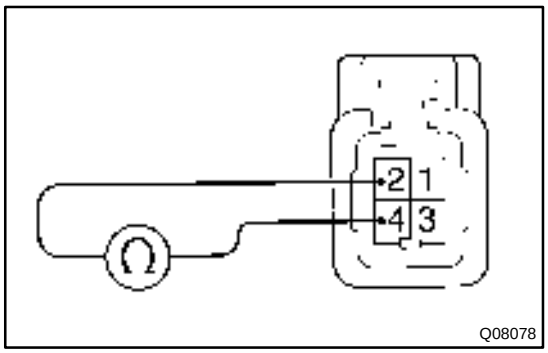

PREPARATION:
Disconnect O/D main switch connector.
CHECK:
Measure resistance between terminals 2 and 4 of O/D main switch connector.
OK:

O/D Main Switch	Resistance
ON	∞ Ω (open)
OFF	0 Ω (continuity)

NG → **Replace O/D main switch.**

OK →

Check and replace combination meter (See page BE–33).

O/D OFF indicator light remains ON

1	Check O/D Main Switch.

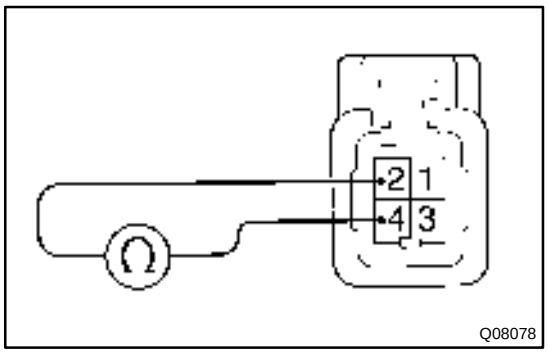

PREPARATION:
(a) Disconnect O/D main switch connector.
(b) Measure resistance between terminals 2 and 4 of O/D main switch connector.
OK:

O/D Main Switch	Resistance
ON	∞ Ω (open)
OFF	0 Ω (continuity)

NG → **Replace O/D main switch.**

OK →

2	**Check harness and connector between O/D OFF indicator light and O/D main switch, O/D OFF indicator light and ECM (See page IN–27).**

NG → **Repair or replace harness or connector.**

OK

Check and replace ECM.

DI4OW–02

DTC	P1520	Stop Light Switch Signal Malfunction

CIRCUIT DESCRIPTION

The purpose of this circuit is to prevent the engine from stalling, while driving in lock–up condition, when brakes are suddenly applied.
When the brake pedal is operated, this switch sends a signal to ECM. Then the ECM cancels operation of the lock–up clutch while braking is in progress.

DTC No.	DTC Detecting Condition	Trouble Area
P1520	The stop light switch does not turn off even once the vehicle is driven (2 trip detection logic)	• Short in stop light switch signal circuit • Stop light switch • ECM

WIRING DIAGRAM

See page DI–101.

INSPECTION PROCEDURE

See page DI–101.

DTC	P1700	Speed Sensor No.2 Circuit Malfunction (No.2 Vehicle Speed Sensor)

CIRCUIT DESCRIPTION

A rotor with built in permanent magnet is mounted on the output shaft. Every time the output shaft (and thus the rotor) makes one complete revolution, the permanent magnet activates the reed switch, which is built into the No.2 vehicle speed sensor, causing it to generate signal. This signal, which corresponds to the governor pressure in a conventional automatic transaxle, is sent to the ECM, which uses it in controlling the shift points and the operation of the lock–up clutch.
This sensor outputs one pulse for every one revolution of the output shaft.
If the No.2 vehicle speed sensor malfunctions, the ECM uses input signals from the No.1 vehicle speed sensor as a back–up signal.

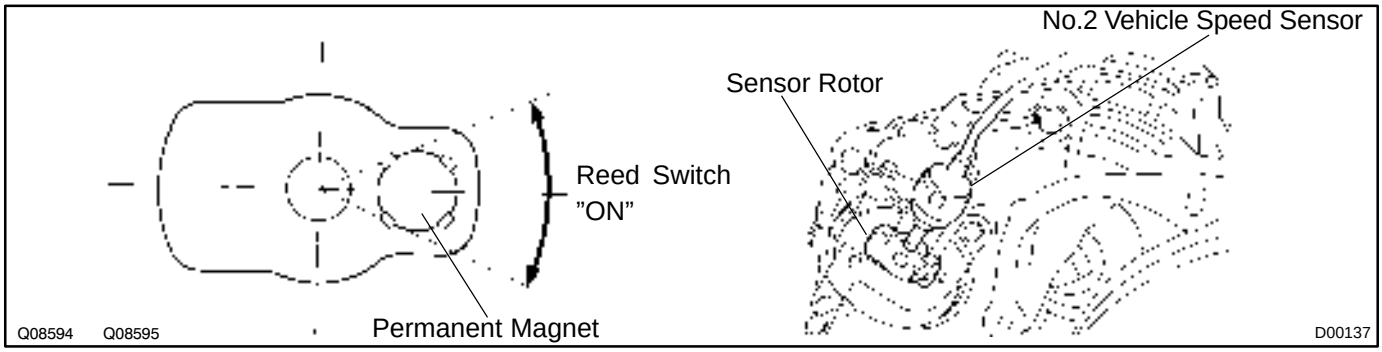

DTC No.	DTC Detecting Condition	Trouble Area
P1700	All conditions below are detected 500 times or more continuously. (2 trip detection logic) (a) No No.2 vehicle speed sensor signal in 4 pulses of No.1 vehicle speed sensor signal. (b) Vehicle speed: 9 km/h (5.6 mph) or more for at least 4 sec. (c) Park/neutral position switch: OFF (Other than P or N position).	• Open or short in No.2 vehicle speed sensor circuit • No.2 vehicle speed sensor • ECM

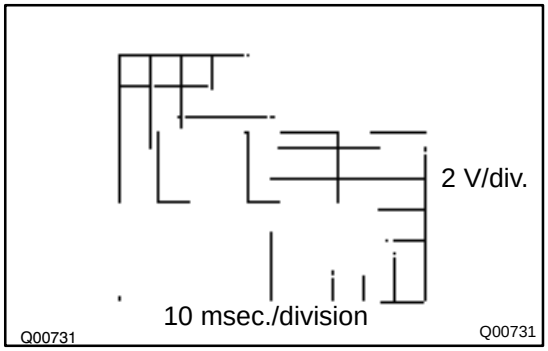

Reference:

- Waveform between terminals SP2 and E1 when vehicle speed is approx. 60 km/h (37 mph).

WIRING DIAGRAM

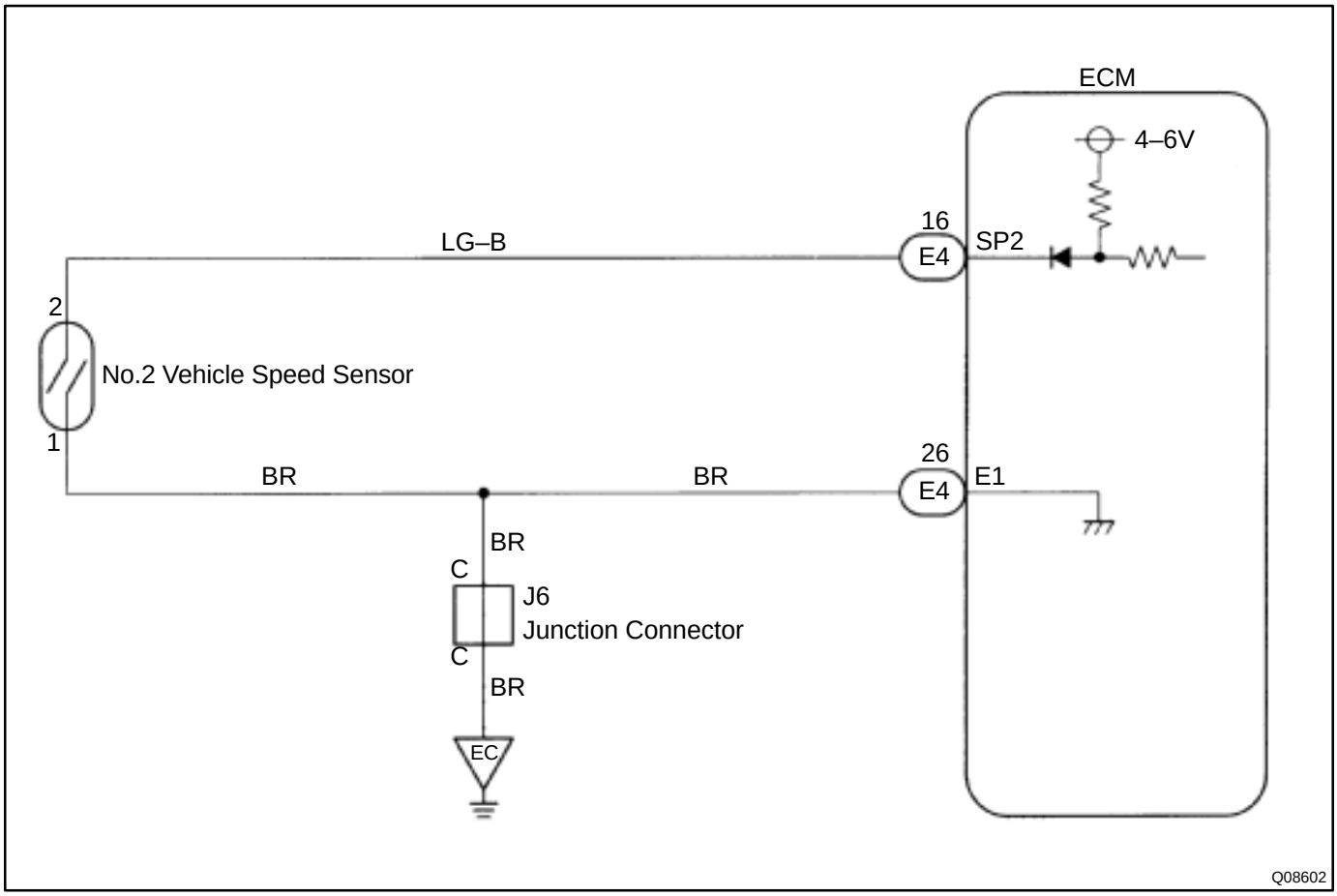

INSPECTION PROCEDURE

1	**Check vehicle speed value or resistance between terminals SP2 and E1 of ECM.**

When using OBD II scan tool or TOYOTA hand–held tester:

PREPARATION:

(a) Connect the OBD II scan tool or TOYOTA hand–held tester to the DLC3.

(b) Start the engine and OBD II scan tool or TOYOTA hand–held tester main switch ON.

CHECK:

Drive the vehicle and read vehicle speed value.

OK:

Vehicle speed matches tester speed value.

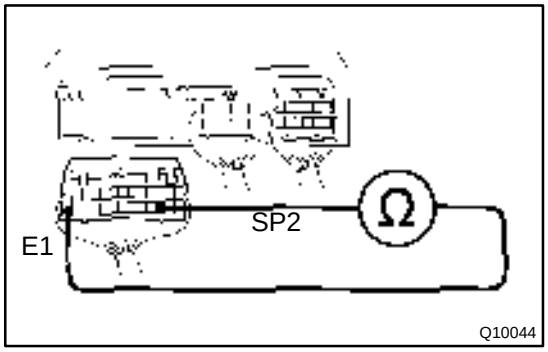

When not using OBD II scan tool or TOYOTA hand–held tester:

PREPARATION:

(a) Disconnect the connector from ECM.

(b) Shift the shift level to the N position.

(c) Jack up one of the front wheels.

CHECK:

Check that there is continuity between terminals SP2 and E1 of ECM while slowly turning the jack–up wheel by hand.

OK:

Resistance changes between: 0 Ω and ∞ Ω

OK → **Check and replace ECM.**

NG

2	Check No.2 vehicle speed sensor.

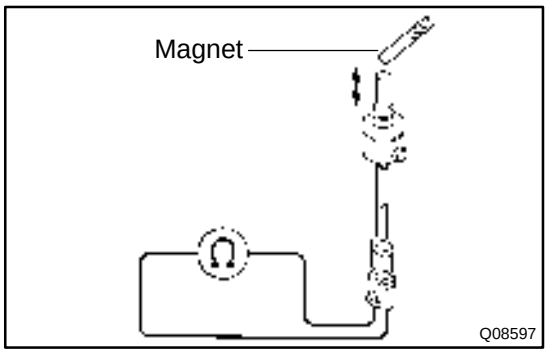

PREPARATION:
Remove the No.2 vehicle speed sensor from transmission.
CHECK:
Check that there is continuity between terminals of No.2 vehicle speed sensor connector when a magnet is put close to it as shown.
OK:
Resistance changes between: 0 Ω and ∞ Ω

NG → **Replace the No.2 vehicle speed sensor.**

OK

Check and repair harness and connector between ECM and No.2 vehicle speed sensor (See page IN–27)
Check and repair sensor rotor.

DI4OY–02

DTC	P1780	Park/Neutral Position Switch Malfunction

CIRCUIT DESCRIPTION

The park/neutral position switch detects the shift lever position and sends signals to the ECM.
The ECM receives signals (NSW, R, 2 and L) from the park/neutral position switch. When the signal is not sent to the ECM from the park/neutral position switch, the EcM judges that the shift lever is in the D position.

DTC No.	DTC Detection Condition	Trouble Area
P1780	2 or more switches are ON simultaneously for N, R, 2 or L position (2 trip detection logic)	• Short in park/neutral position switch circuit • Park/neutral position switch • ECM
	When driving under conditions (a), (b) and (c) for 30 seconds or more, the park/neutral position switch is ON (N position). (2 trip detection logic) (a) Vehicle speed: 80 km/h (50 mph) or more (b) Engine speed: 2,000 – 3,000 rpm (c) Manifold absolute pressure: 450 mmHg or more	

WIRING DIAGRAM

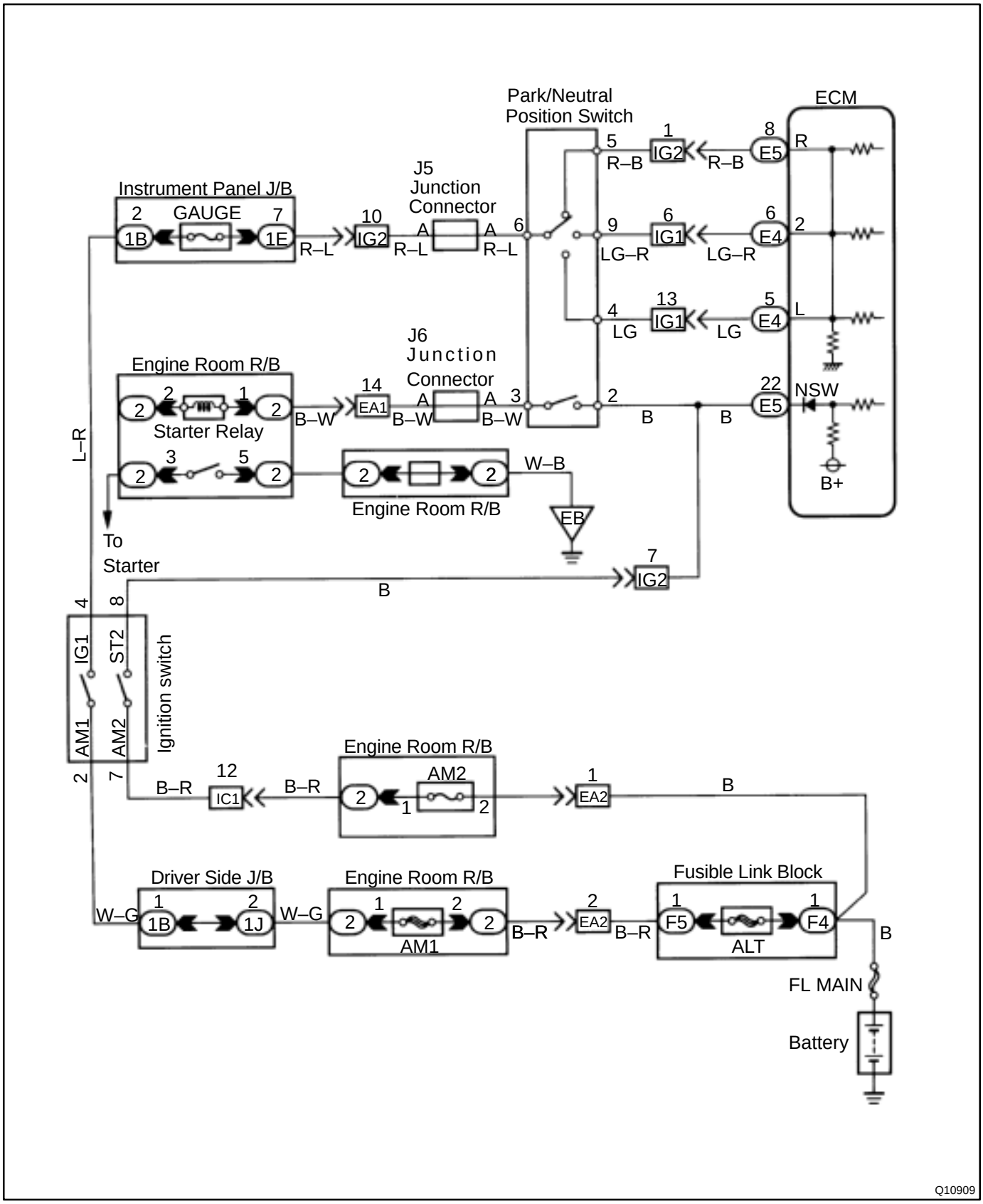

INSPECTION PROCEDURE

1	**Check PNP SW, REVERSE, 2ND and LOW signal.**

When using TOYOTA hand–held tester:

PREPARATION:

(a) Connect the TOYOTA hand–held tester to the DLC3.

(b) Turn the ignition switch ON and TOYOTA hand–held tester main switch ON.

CHECK:

Shift the shift lever to the P, R, N, 2 or L position, and read the NSW, R2 or L signal on the TOYOTA hand–held tester.

OK:

Shift position	Signal
P, N	PNP SW ..... OFF → ON
R	REVERSE ..... OFF → ON
2	2ND ..... OFF → ON
L	LOW ..... OFF → ON

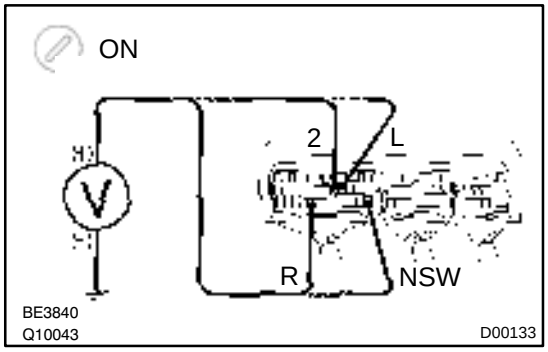

When not using TOYOTA hand–held tester:

PREPARATION:

Turn the ignition switch ON.

CHECK:

Measure voltage between terminals NSW, R, 2, L of ECM and body ground when the shift lever is shifted to the following positions.

OK:

Position	NSW–Body ground	R–Body ground	2–Body ground	L–Body ground
P,N	0 V	0 V	0 V	0 V
R	7.5 – 14 V*	7.5 – 14 V*	0 V	0 V
D	7.5 – 14 V	0 V	0 V	0 V
2	7.5 – 14 V	0 V	7.5 – 14 V	0 V
L	7.5 – 14 V	0 V	0 V	7.5 – 14 V

*:The voltage will drop slightly due to lighting up of the back up light.

OK → **Check and replace the ECM.**

NG

2	Check park/neutral position switch.

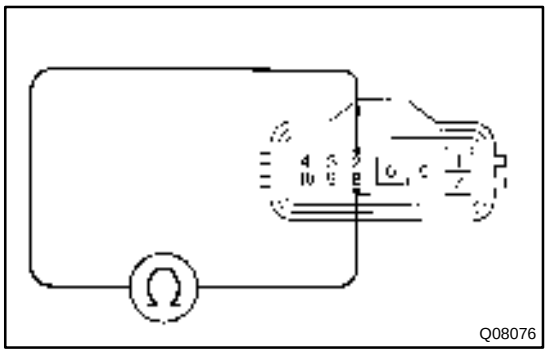

PREPARATION:

(a) Jack up the vehicle.

(b) Disconnect the park/neutral position switch.

CHECK:

Check continuity between each terminal shown below when the shift lever is moved to each position.

Shift Position	Terminal No. to continuity	
P	2 – 7	5 – 6
R	2 – 8	–
N	2 – 9	5 – 6
D	2 – 10	–
2	2 – 3	–
L	2 – 4	–

NG → **Replace park/neutral position switch.**

OK →

Repair or replace harness and connector.

DI4OR–02

CIRCUIT INSPECTION

DTC	P0500	Vehicle Speed Sensor Malfunction (No.1 Vehicle Speed Sensor)

See page DI–89.

DTC	P0750, P0755	Shift Solenoid A/B Malfunction (Shift Solenoid Valve No.1/No.2)

SYSTEM DESCRIPTION

The ECM uses signals from the vehicle speed sensor to detect the actual gear position (1st, 2nd, 3rd or O/D gear). The ECM then compares the actual gear with the shift schedule in the ECM memory to detect mechanical trouble of the shift solenoid valves and valve body.

DTC No.	DTC Detecting Condition	Trouble Area
P0750 P0755	During normal driving, the gear required by the ECM does not match the actual gear (2 trip detection logic)	• Shift solenoid valve No.1/No.2 is stuck open or closed • Valve body is blocked up or stuck

Check the shift solenoid valve No.1 when DTC P0750 is output and check shift solenoid valve No.2 when DTC P0755 is output.

INSPECTION PROCEDURE

1	Check shift solenoid valve No.1 or No.2 operation.

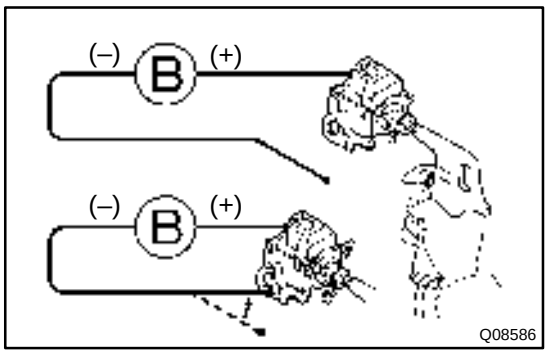

PREPARATION:

(a) Remove the oil pan.

(b) Remove the shift solenoid valve No.1 or No.2.

CHECK:

(a) Applying 490 kPa (5 kgf/cm^2, 71 psi) of compressed air, check that the solenoid valves do not leak air.

(b) When battery positive voltage is supplied to the shift solenoid valves, check they open.

NG → **Replace shift solenoid valve No.1 or No.2.**

OK

Check valve body (See page DI–140).

NG → **Repair or replace valve body (See page AX–5).**

OK

Repair the transaxle (See page AX–16).

DTC	P0753, P0758	Shift Solenoid A/B Electrical Malfunction (Shift Solenoid Valve No.1/No.2)

CIRCUIT DESCRIPTION

Shifting from 1st ot O/D is done in combination with ON and OFF of the shift solenoid valves No.1 and No.2 controlled by ECM. If an open or short circuit occurs in either of the shift solenoid valves, the ECM controls the remaining normal shift solenoid valve to allow the vehicle to be operated safely (Fail safe function).

Fail Safe Function:

If either of the shift solenoid valve circuits develops an open or a short, the ECM turns the other shift solenoid ON and OFF to shift to the gear positions shown in the table below. The ECM also turns the shift solenoid valve SL OFF at the same time. If both solenoids are malfunction, hydraulic control cannot be done electronically so it must be done manually.

Manual shifting as shown in the following table must be done. (In the case of a short circuit, the ECM stops sending current to the short circuited solenoid).

Position	NORMAL			SHIFT SOLENOID VALVE NO.1 MALFUNCTIONING			SHIFT SOLENOID VALVE NO.2 MALFUNCTIONING			BOTH SOLENOIDS MALFUNCTIONING
	Solenoid valve		Gear	Solenoid valve		Gear	Solenoid valve		Gear	Gear when shift selector is manually operated
	No.1	No.2		No.1	No.2		No.1	No.2		
D	ON	OFF	1st	X	ON	3rd	ON	X	1st	O/D
	ON	ON	2nd	X	ON	3rd	OFF	X	O/D	O/D
	OFF	ON	3rd	X	ON	3rd	OFF	X	O/D	O/D
	OFF	OFF	O/D	X	OFF	O/D	OFF	X	O/D	O/D
2	ON	OFF	1st	X	ON	3rd	ON	X	1st	3rd
	ON	ON	2nd	X	ON	3rd	OFF	X	3rd	3rd
	OFF	ON	3rd	X	ON	3rd	OFF	X	3rd	3rd
L	ON	OFF	1st	X	OFF	1st	ON	X	1st	1st
	ON	ON	2nd	X	ON	2nd	ON	X	1st	1st

X: Malfunctions

Check the shift solenoid valve No.1 when DTC P0753 in output and check the shift solenoid valve No.2 when DTC P0758 is output.

DTC No.	DTC Detecting Condition	Trouble Area
P0753 P0758	The ECM checks for an open or short circuit in the shift solenoid valves No.1 and No.2 circuit when it changes. The ECM records DTC P0753 or P0758 if condition (a) or (b) is detected once, but it does not light up the MIL. After ECM detects condition (a) or (b) continuously 2 times or more in one–trip. it causes the MIL light up until condition (a) or (b) once, it starts lighting up the MIL again. (a) Solenoid resistance is 8 Ω or less short circuit when solenoid is energized. (b) Solenoid resistance is 100 kΩ or more open circuit when solenoid is not energized.	• Open or short in shift solenoid valve No.1/No.2 circuit • Shift solenoid valve No.1/No.2 • ECM

WIRING DIAGRAM

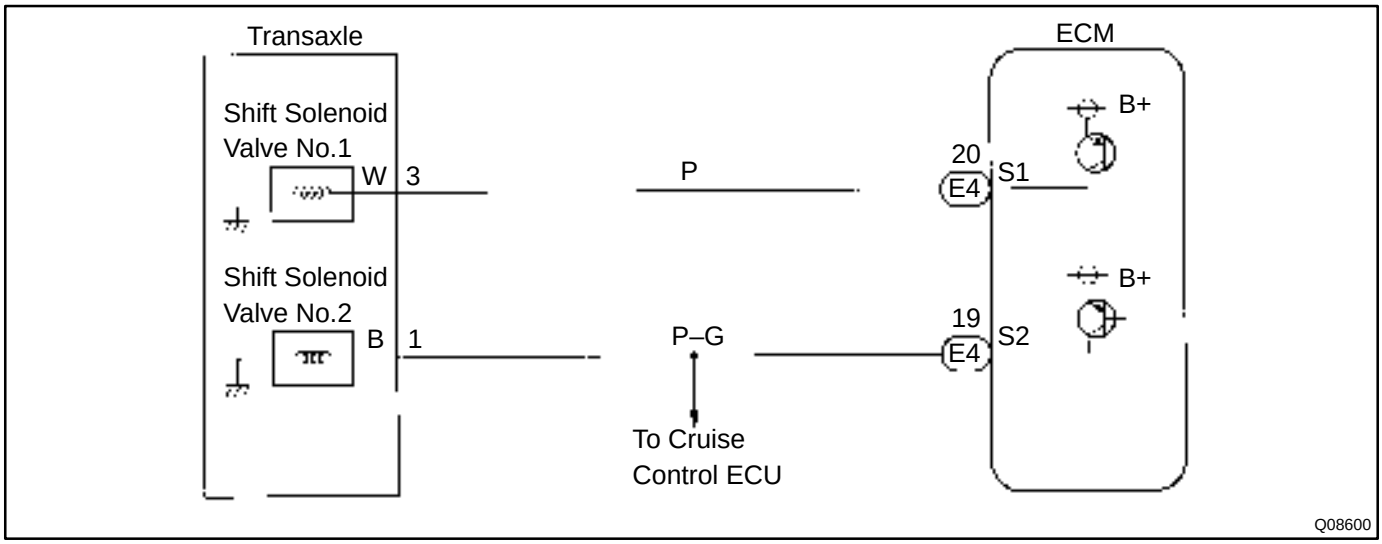

INSPECTION PROCEDURE

1	**Measure resistance between terminal S1 or S2 of ECM and body ground.**

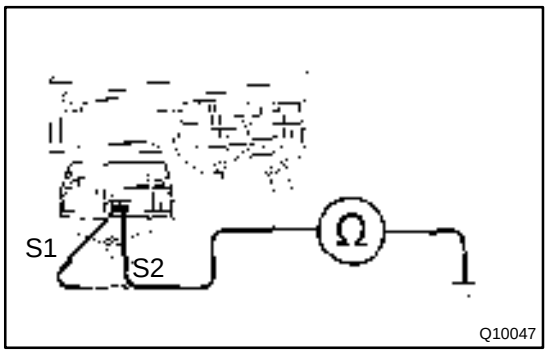

PREPARATION:
Disconnect the connector from ECM.
CHECK:
Measure resistance between terminal S1 or S2 of ECM and body ground.
OK:
Resistance: 11 – 15 Ω

OK → **Check and replace the ECM.**

NG

2	**Check harness and connector between ECM and automatic transaxle solenoid connector.**

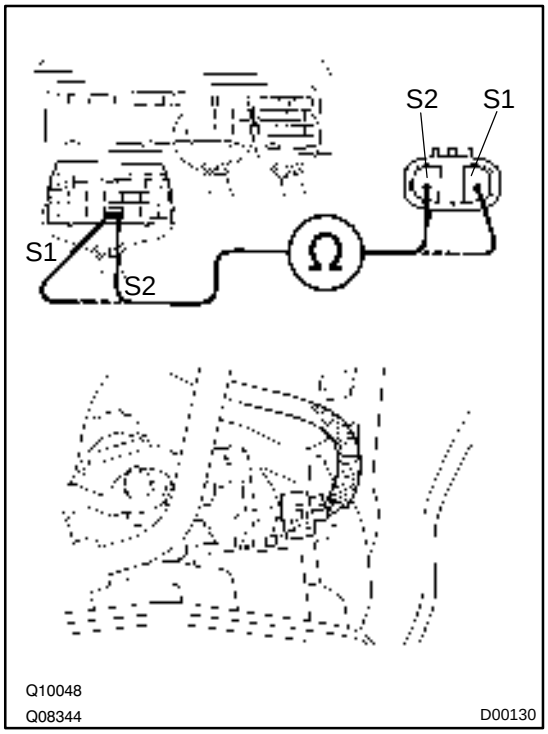

PREPARATION:

(a) Disconnect the connector from ECM.

(b) Disconnect the solenoid connector from the automatic transaxle.

CHECK:

Check harness and connector between terminal S1 or S2 of ECM and terminal of solenoid connector.

OK:

There is no open and no short circuit.

NG → **Repair or replace harness or connector.**

OK

3	Check shift solenoid valve No.1 or No.2.

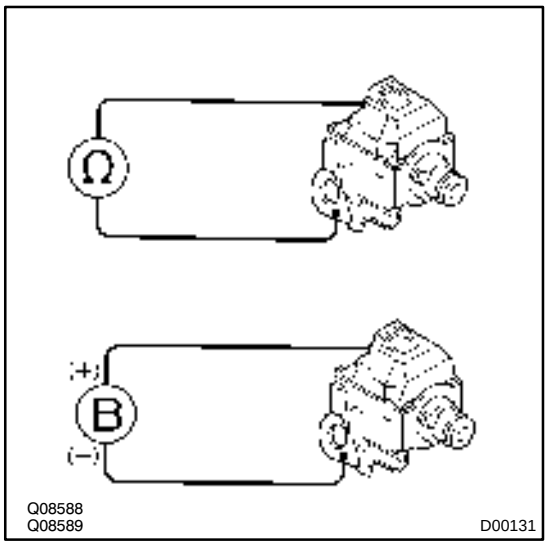

PREPARATION:

(a) Jack up the vehicle.
(b) Remove the oil pan.
(c) Disconnect the solenoid connector.
(d) Remove the shift solenoid valve No.1 or No.2.

CHECK:

Measure resistance between solenoid connector and solenoid body.

OK:

Resistance: 11 – 15 Ω

CHECK:

Connect positive ⊕ lead to terminal of solenoid connector, negative ⊖ lead to solenoid body.

OK:

The solenoid makes an operating noise.

NG → **Replace shift solenoid valve.**

OK

Repair or replace solenoid wire.

DTC	P0770	Shift Solenoid E Malfunction (Shift Solenoid Valve SL)

SYSTEM DESCRIPTION

The ECM uses the signals from the throttle position sensor, air–flow meter and crankshaft position sensor to monitor the engagement condition of the lock–up clutch.
Then the ECM compares the engagement condition of the lock–up clutch with the lock–up schedule in the ECM memory to detect mechanical trouble of the shift solenoid valve SL, valve body and torque converter clutch.

DTC No.	DTC Detecting Condition	Trouble Area
P0770	Lock–up does not occur when driving in the lock–up range (normal driving at 80 km/h [50 mph]), or lock–up remains ON in the lock–up OFF range. (2 trip detection logic)	• Shift solenoid valve SL is stuck open or closed • Valve body blocked up or stuck • Lock–up clutch

INSPECTION PROCEDURE

1	Check shift solenoid valve SL operation.

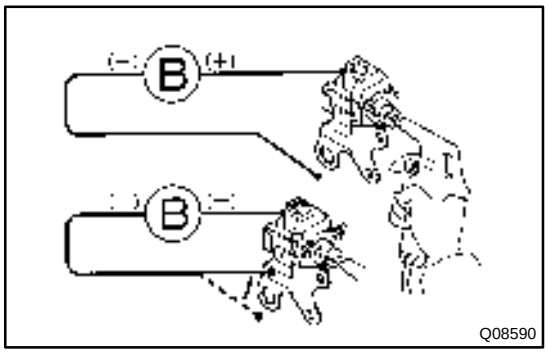

Q08590

PREPARATION:
Remove shift solenoid valve SL from valve body.
CHECK:
(a) Applying 490 kPa (5 kgf/cm^2, 71 psi) of compressed air, check that the solenoid valve does not leak air.
(b) When battery positive voltage is supplied to the shift solenoid valve, check it opens.

NG → **Replace shift solenoid valve SL.**

OK

2	Check valve body (See page DI–140).

NG → **Repair or replace valve body (See PageAX–16).**

OK

Replace torque converter clutch (See page AX–16).

DTC	P0773	Shift Solenoid E Electrical Malfunction (Shift Solenoid Valve SL)

CIRCUIT DESCRIPTION

The shift solenoid valve SL is turned ON and OFF by signals from the ECM to control the hydraulic pressure acting on the lock–up relay valve, which then controls operation of the lock–up clutch.

Fail Safe Function

If the ECM detects a malfunction, it turns the shift solenoid valve SL OFF.

DTC No.	DTC Detecting Condition	Trouble Area
P0773	Either (a) or (b) are detected for 1 time. (2 trip detection logic) (a) Solenoid resistance is 8 Ω or less short circuit when solenoid is energized. (b) Solenoid resistance is 100 kΩ or more open circuit when solenoid is not energized.	• Open or short in shift solenoid valve SL circuit • Shift solenoid valve SL • ECM

WIRING DIAGRAM

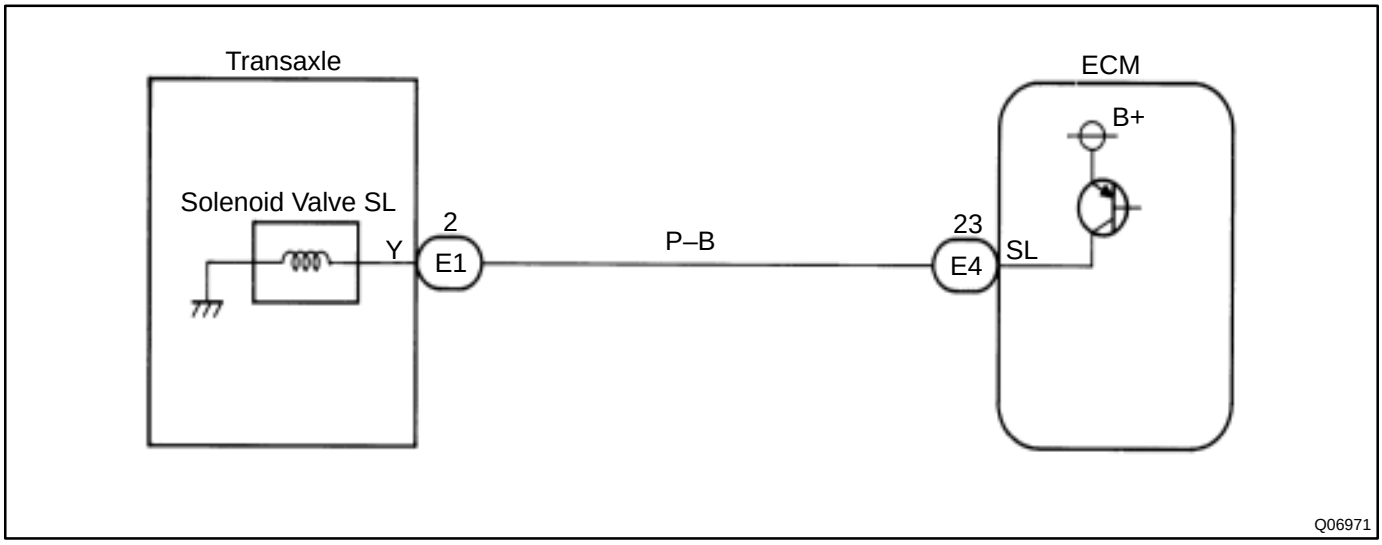

INSPECTION PROCEDURE

1	**Measure resistance between terminal SL of ECM and body ground.**

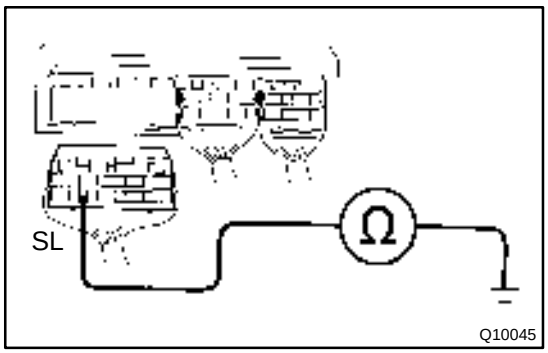

PREPARATION:
Disconnect the connector from ECM.
CHECK:
Measure resistance between terminal SL of ECM and body ground.
OK:
Resistance: 11 – 15 Ω

OK → **Check and replace ECM.**

NG

2	**Check harness and connector between ECM and automatic transaxle solenoid connector (See Page IN–27).**

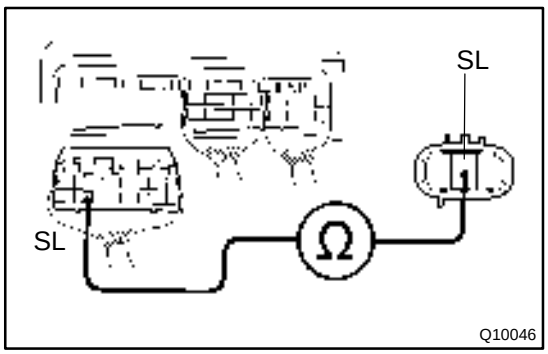

PREPARATION:
(a) Disconnect the connector from ECM.
(b) Disconnect the solenoid connector from the automatic transaxle.
CHECK:
Check harness between terminal SL of ECM and terminal SL of automatic trasaxle solenoid connector.
OK:
There is no open or short circuit.

NG → **Repair or replace harness or connector.**

OK

3	Check shift solenoid valve SL.

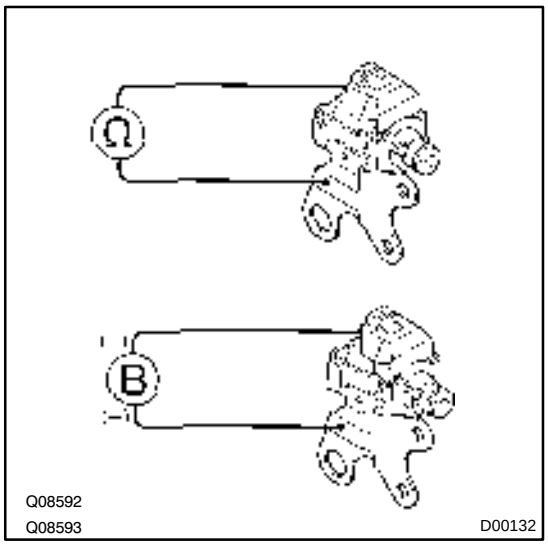

PREPARATION:

(a) Jack up the vehicle.
(b) Remove the oil pan.
(c) Disconnect the shift solenoid valve SL connector.
(d) Remove the shift solenoid valve SL.

CHECK:

Measure resistance between solenoid connector and solenoid body.

OK:

Resistance: 11 – 15 Ω

CHECK:

Connect positive ⊕ lead to terminal of solenoid connector, negative ⊖ lead to solenoid body.

OK:

The shift solenoid valve SL makes operation noise.

NG → **Replace shift solenoid valve SL.**

OK

Check and replace or repair the solenoid wire.

DI4OL–02

CUSTOMER PROBLEM ANALYSIS CHECK

Electronically Controlled Transaxle Check Sheet	Inspector's Name :

Customer's Name		Registration No.	
		Registration Year	/ /
		Frame No.	
Date Vehicle Brought In	/ /	Odometer Reading	km mile

Date Problem Occurred	/ /
How Often Does Problem Occur?	☐ Continuous ☐ Intermittent (times a day)

Symptoms	☐ Vehicle does not move (☐ Any position ☐ Particular position)
	☐ No up–shift (☐ 1st → 2nd ☐ 2nd → 3rd ☐ 3rd → O/D)
	☐ No down–shift (☐ O/D → 3rd ☐ 3rd → 2nd ☐ 2nd → 1st)
	☐ Lock–up malfunction
	☐ Shift point too high or too low
	☐ Harsh engagement (☐ N → D ☐ Lock–up ☐ Any drive position)
	☐ Slip or shudder
	☐ No kick–down
	☐ Others ( )

Check Item	Malfunction Indicator Lamp	☐ Normal ☐ Remains ON

DTC Check	1st Time	☐ Normal code	☐ Malfunction code (Code)
	2nd Time	☐ Normal code	☐ Malfunction code (Code)

DI4ON–02

DIAGNOSTIC TROUBLE CODE CHART

If a DTC is displayed during the DTC check, check the circuit listed for that code in the table below and proceed to the page given.

DTC No. (See Page)	Detection Item	Trouble Area	MIL *	Memory
P0500 (DI–144)	Vehicle Speed Sensor Malfunction (No.1 Vehicle Speed Sensor)	• Open or short in No.1 vehicle speed sensor circuit • No.1 vehicle speed sensor • Combination meter • ECM	●	○
P0750 (DI–145)	Shift Solenoid A Malfunction (Shift Solenoid Valve No.1)	• Shift solenoid valve No.1 is stuck open or closed • Valve body is blocked up or stuck	●	○
P0753 (DI–146)	Shift Solenoid A Electrical Malfunction (Shift Solenoid Valve No.1)	• Open or short in shift solenoid valve No.1 circuit • Shift solenoid valve No.1 • ECM	●	○
P0755 (DI–145)	Shift Solenoid B Malfunction (Shift Solenoid Valve No.2)	• Shift solenoid valve No.2 is stuck open or closed • Valve body is blocked up or stuck	●	○
P0758 (DI–146)	Shift Solenoid B Electrical Malfunction (Shift Solenoid Valve No.2)	• Open or short in shift solenoid valve No.2 circuit • Shift solenoid valve No.2 • ECM	●	○
P0770 (DI–150)	Shift Solenoid E Malfunction (Shift Solenoid Valve SL)	• Shift solenoid valve SL is stuck open or closed • Valve body is blocked up or stuck • Lock–up clutch	●	○
P0773 (DI–152)	Shift Solenoid E Electrical Malfunction (Shift Solenoid Valve SL)	• Open or short in shift solenoid valve SL circuit • Shift solenoid valve SL • ECM	●	○
P1520 (DI–155)	Stop Light Switch Signal Malfunction	• Open or short in shift solenoid valve SL circuit. • Stop light switch • ECM	●	○
P1700 (DI–156)	Speed Sensor No.2 Circuit Malfunction (No.2 Vehicle Speed Sensor)	• Open or short in No.2 vehicle speed sensor circuit • No.2 vehicle speed sensor • ECM	●	○
P1780 (DI–160)	Park/Neutral Position Switch Malfunction	• Short in park/neutral position switch circuit • Park/neutral position switch • ECM	●	○

* : ●...MIL light up

AUTOMATIC TRANSAXLE

DI4OK–02

HOW TO PROCEED WITH TROUBLESHOOTING

Troubleshoot in accordance with the procedure on the following pages.

Items inside ▱ are titles of pages in this manual, with the page number indicated in the bottom portion. See the indicated pages for detailed explanations.

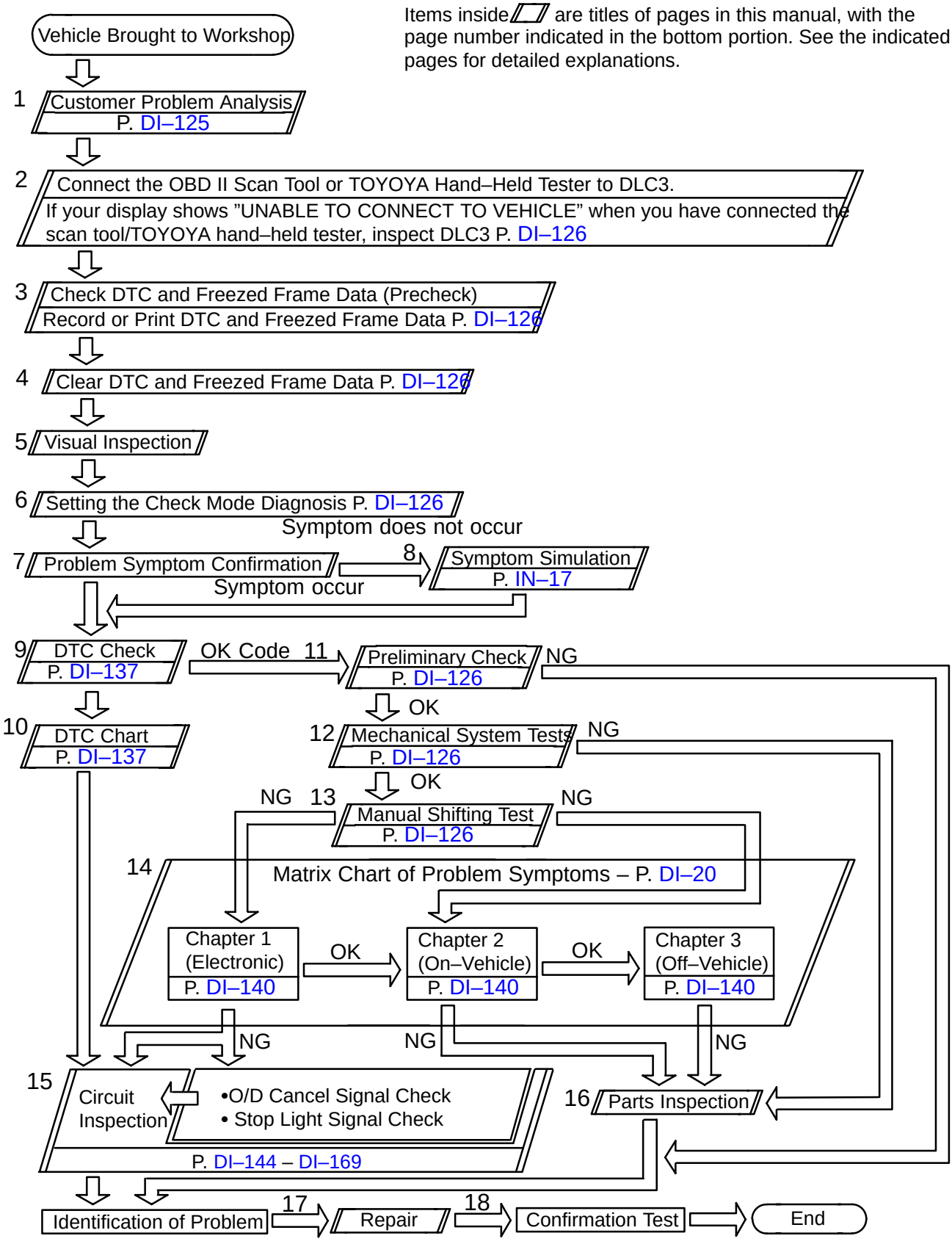

DI4OO–02

PARTS LOCATION

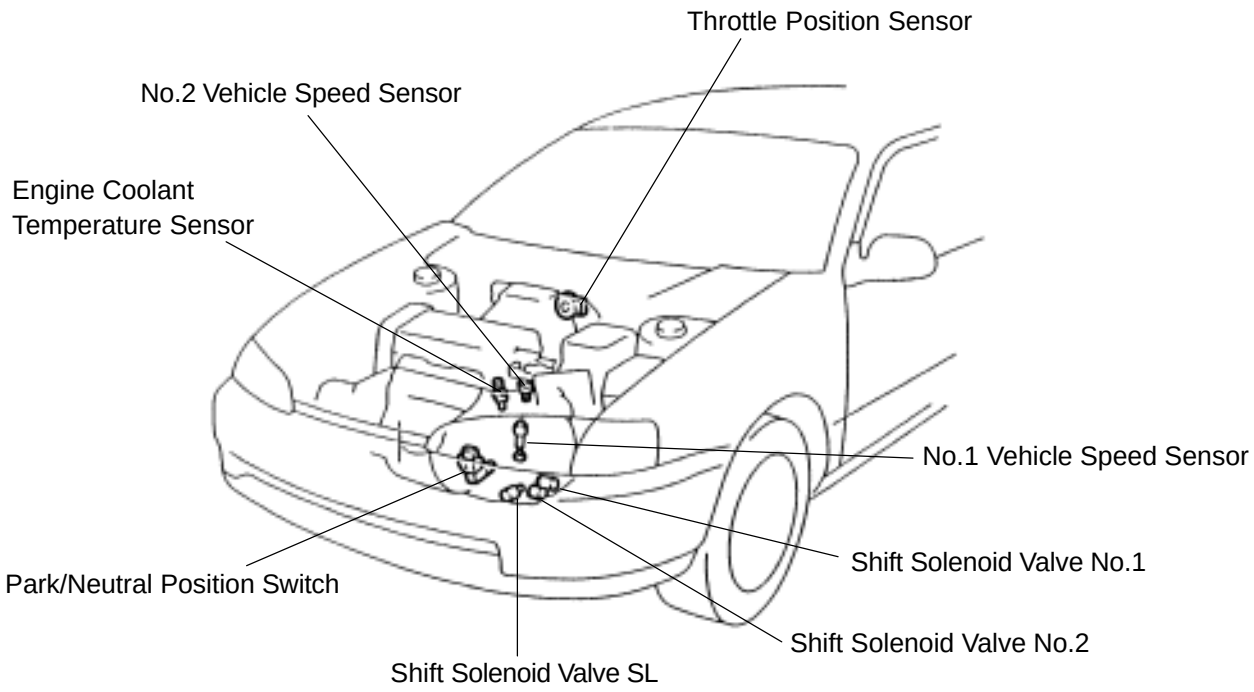

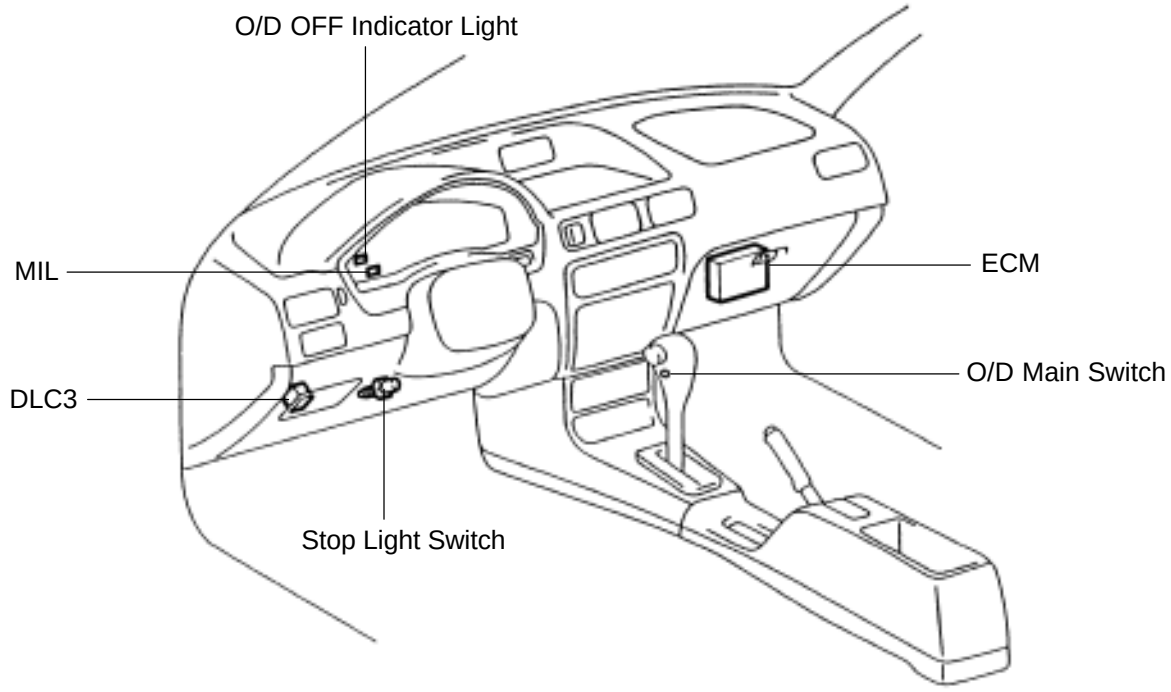

Q10070

DI4OM–02

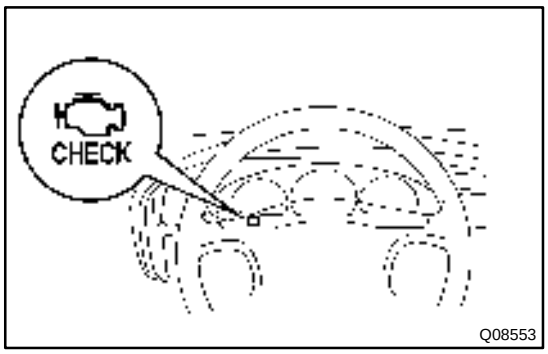

PRE–CHECK

1. DIAGNOSIS SYSTEM

(a) Description

When troubleshooting OBD II vehicles, the only difference from the usual troubleshooting procedure is that you connect to the vehicle the OBD II scan tool complying with SAE J1987 or TOYOTA hand–held tester, and read off various data output from the vehicle's ECM.

OBD II regulations require that the vehicle's on–board computer lights up the Malfunction Indicator Lamp (MIL) on the instrument panel when the computer detects a malfunction in the computer itself or in drive system components which affect vehicle emissions. In addition to the MIL lighting up when a malfunction is detected, the applicable DTCs prescribed by SAE J2012 are recorded in the ECM memory (See page DI–14).

If the malfunction does not reoccur in 3 trips, the MIL goes off but the DTCs remain recorded in the ECM memory.

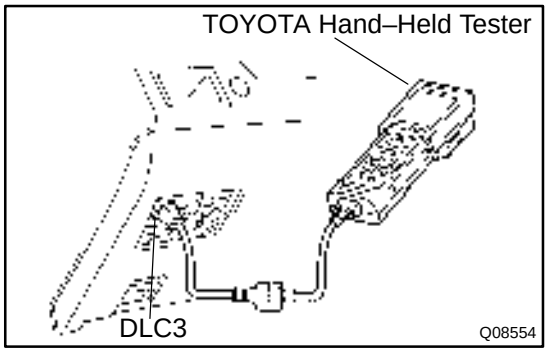

To check the DTCs, connect the OBD II scan tool or TOYOTA hand–held tester to DLC3 on the vehicle. The OBD II scan tool or TOYOTA hand–held tester also enables you to erase the DTCs and check freeze frame data and various forms of engine data (For operating instructions, see the OBD II scan tool's instruction book).

DTCs include SAE controlled codes and Manufacturer controlled codes.

SAE controlled codes must be set as prescribed by the SAE, while Manufacturer controlled codes can be set freely by the manufacturer within the prescribed limits (See DTC chart on page DI–137).

The diagnosis system operates in normal mode during normal vehicle use, and also has a check mode for technicians to simulate malfunction symptoms and perform troubleshooting. Most DTCs use 2 trip detection logic(*) to prevent erroneous detection. By switching the ECM to check mode when troubleshooting, the technician can cause the MIL to light up to blink for a malfunction that is only detected once or momentarily.

(TOYOTA hand–held tester)

*2 trip detection logic:

When a logic malfunction is first detected, the malfunction is temporarily stored in the ECM memory. If the same malfunction is detected again during the second test drive, this second detection causes the MIL to light up.

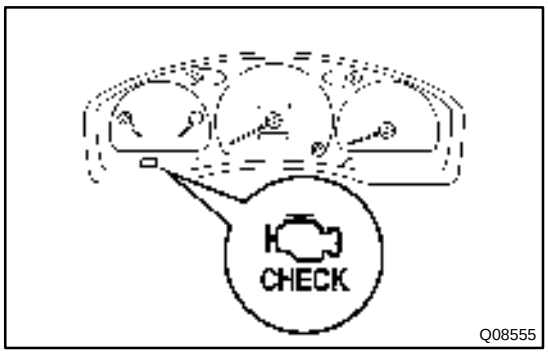

2. INSPECT DIAGNOSIS (NORMAL MODE)

(a) Check the MIL.

(1) The MIL lights up on when the ignition switch is turned ON and the engine is not running.

HINT:

If the MIL does not light up, troubleshoot the combination meter (See page BE–33).

(2) When the engine is starts, the MIL should go off. If the lamp remains on, the diagnosis system has detected a malfunction or abnormality in the system.

(b) Check the DTC.

NOTICE:

(TOYOTA hand–held tester only): When the diagnostic system is switched from normal mode to check mode, it erases all DTCs and freezed frame data recorded in normal mode. So before switching modes, always check the DTCs and freezed frame data, and note them down.

(1) Prepare the OBD II scan tool (complying with SAE J1978) or TOYOTA hand–held tester.

(2) Connect the OBD II scan tool or TOYOTA hand–held tester to DLC3 at the instrument panel junction block.

(3) Turn the ignition switch ON and turn the OBD II scan tool or TOYOTA hand–held tester switch ON.

(4) Use the OBD II scan tool or TOYOTA hand–held tester to check the DTCs and freezed frame data. Note them down (For operating instructions, see the OBD II scan tool's instruction book).

(5) See page DI–137 to confirm the details of the DTCs.

NOTICE:

When simulating symptoms with an OBD II scan tool (excluding TOYOTA hand–held tester) to check the DTCs, use normal mode. For codes on the DTC chart subject to "2 trip detection logic", turn the ignition switch off after the symptoms have been simulated for the first time. Then repeat the simulation process again. When the program has been simulated twice, the MIL lights up and the DTCs are recorded in the ECM.

3. INSPECT DIAGNOSIS (CHECK MODE)

TOYOTA hand–held tester only:

Compared to the normal mode, the check mode has high sensing ability to detect malfunctions. Furthermore, the same diagnostic items which are detected in the normal mode can also be detected in check mode.

(a) Check the DTC.

(1) Initial conditions.
- Battery positive voltage 11 V or more.
- Throttle valve fully closed.
- Transaxle in the PARK position.
- Air conditioning off.

(2) Turn the ignition switch OFF.

(3) Prepare the TOYOTA hand–held tester.

(4) Connect the TOYOTA hand–held tester to DLC3 at the instrument panel junction block.

(5) Turn the ignition switch ON and switch the TOYOTA hand–held tester ON.

(6) Switch the TOYOTA hand–held tester from normal mode to check mode (Check that the MIL flashes).

(7) Start the engine (The MIL goes off after the engine start).

(8) Simulate the conditions of the malfunction described by the customer.

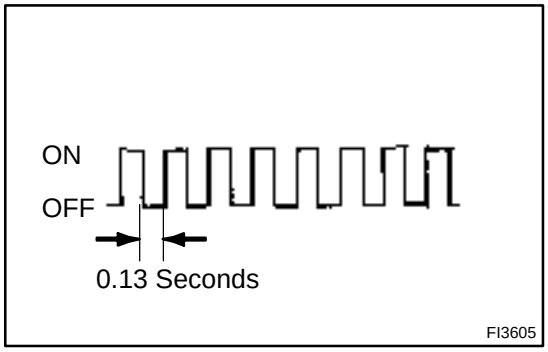

NOTICE:

Leave the ignition switch ON until you have checked the DTCs etc.

(9) After simulating the malfunction conditions, use the TOYOTA hand–held tester diagnosis selector to check the DTCs and freezed frame data, etc.

HINT:

Take care not to turn the ignition switch OFF, as turning it off switches the diagnosis system from check mode to normal mode, erasing all DTCs etc.

(10) After checking the DTC, inspect the applicable circuit.

(b) Clear the DTC.

The following actions will erase the DTCs and freezed frame data.

Operating the OBD II scan tool (complying with SAE J1978) or TOYOTA hand–held tester to erase the codes. (See the OBD II scan tool's instruction book for operating instructions.)

NOTICE:

If the TOYOTA hand–held tester switches the ECM from normal mode to check mode or vice–versa, or if the ignition switch is turned from ON to ACC or OFF during check mode, the DTCs and freezed frame data will be erased.

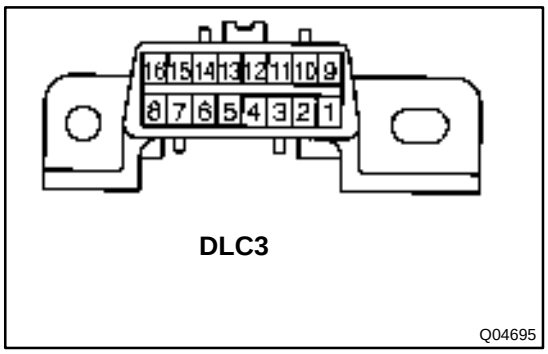

DLC3

(c) Check the DLC3.
The vehicle's ECM uses the ISO 9141–2 communication protocol. The terminal arrangement of DLC3 complies with SAE J1962 and matches the ISO 9141–2 format.

Terminal No.	Condition / Voltage or Resistance	Condition
7	Bus ⊕ Line / Pulse generation	During communication
4	Chassis Ground /↔ Body 1 Ω or less	Always
5	Signal Ground / ↔ Body 1 Ω or less	Always
16	Battery Positive / ↔ Body 1Ω or less Battery Positive / ↔ Body 9 – 14 V	Always

HINT:
If your display shows "UNABLE TO CONNECT TO VEHICLE" when you have connected the cable of OBD II scan tool or TOYOTA hand–held tester to DLC3, turned the ignition switch ON and operated the scan tool, there is a problem on the vehicle side or tool side.

- If communication is normal when the tool is connected to another vehicle, inspect DLC3 on the original vehicle.
- If communication is still not possible when the tool is connected to another vehicle, the problem is probably in the tool itself, so consult the Service Department listed in the tool's instruction manual.

4. CHECK FOR INTERMITTENT PROBLEMS

TOYOTA hand–held tester only:
By putting the vehicle's ECM in check mode, 1 trip detection logic is possible instead of 2 trip detection logic and sensitivity to detect open circuits is increased. This makes it easier to detect intermittent problems.

(1) Clear diagnostic trouble codes (See page DI–126)
(2) Set check mode (See page DI–126)
(3) Do a simulation test (See page IN–17)
(4) Connector connection and terminal inspection (See page IN–27)
(5) Visual check and contact pressure check (See page IN–27)
(6) Connector handling (See page IN–27)

5. PROBLEM SYMPTOM CONFIRMATION

Taking into consideration the results of the customer problem analysis, try to reproduce the symptoms of the trouble. If the problem is that the transaxle does not up–shift, does not down–shift, or the shift point is too high or too low, conduct the following road test the automatic shift schedule and simulate the problem symptoms.

6. ROAD TEST

NOTICE:

Do the test at normal ATF operating temperature 70 – 80˚C (158 – 176˚F).

(a) D position test.

Shift into the D position and keep the accelerator pedal constant at the full throttle valve opening position, and check the following points:

(1) Check up – shift operation.

Check that 1 → 2, 2 → 3 and 3 → O/D up – shift takes place at the shift point shown in the automatic shift schedule (See page SS–27)

HINT:

(1) O/D Gear Up – shift Prohibition Control.

- Coolant temperature is 60˚C (140˚F) or less.
- If there is a 10 km/h (6 mph) difference between the set cruise control speed and vehicle speed.
- O/D main switch is pushed OFF. (During the O/D OFF indicator light lights up.)

(2) O/D Gear Lock–up Prohibition Control.

- Brake pedal is depressed.
- Coolant temperature is 60˚C (140˚F) or less.

(2) Check for shift shock and slip.

Check for shock and slip at the 1 → 2, 2 → 3 and 3 → O/D up–shifts.

(3) Check for abnormal noise and vibration.

Run at the D position lock – up or O/D gear and check for abnormal noise and vibration.

HINT:

The check for the cause of abnormal noise and vibration must be done very thoroughly as it could also be due to loss of balance in the differential torque converter clutch, etc.

(4) Check kick – down operation.

While running in the D position, 2nd, 3rd and O/D gears, check to see that the possible kick – down vehicle speed limits for 2 → 1, 3 → 2 and O/D → 3 kick – downs conform to those indicated on the automatic shift schedule (See page SS–27).

(5) Check abnormal shock and slip at kick – down.

(6) Check the lock – up mechanism.

- Drive in the D position, O/D gear, at a steady speed (lock – up ON) of about 70 km/h (43 mph).
- Lightly depress the accelerator pedal and check that the RPM does not change abruptly.

If there is a big jump in RPM, there is no lock – up.

(b) 2 position test

Shift into the 2 position and, while driving with the accelerator pedal held constantly at the full throttle valve opening position, check on the following points:

(1) Check up – shift operation.

Check to see that the 1 → 2 up – shift takes place and that the shift point conforms to the automatic shift schedule (See page SS–27).

HINT:

There is no O/D up – shift and lock – up in the 2 position.

(2) Check engine braking.

While running in the 2 position and 2nd gear, release the accelerator pedal and check the engine braking effect.

(3) Check for abnormal noise during acceleration and deceleration, and for shock during up – shift and down – shift.

(c) L position test.

Shift into the L position and while driving with the accelerator pedal held constantly at the full throttle valve opening position, and check the following points:

(1) Check no up–shift.
While running in the L position, check that there is no up – shift to 2nd gear.
(2) Check engine braking.
While running in the L position, release the accelerator pedal and check the engine braking effect.
(3) Check for abnormal noise during acceleration and deceleration.

(d) R position test.
Shift into the R position and while starting at full throttle, check for slipping.

CAUTION:
Before conducting this test make sure that the test area is free from personnel and obstructor.

(e) P position test.
Stop the vehicle on a grade (more than 5˚) and after shifting into the P position, release the parking brake.
Then check the parking lock pawl holds the vehicle in place.

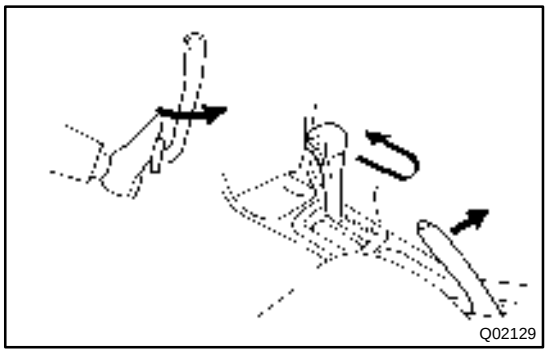
Q02129

7. BASIC INSPECTION

(a) Check the fluid level.

HINT:

- Drive the vehicle so that the engine and transaxle are at normal operating temperature.
  Fluid temperature: 70 – 80˚C (158 – 176˚F)
- Only use the COOL range on the dipstick as a rough reference when the fluid is replaced or the engine does not run.

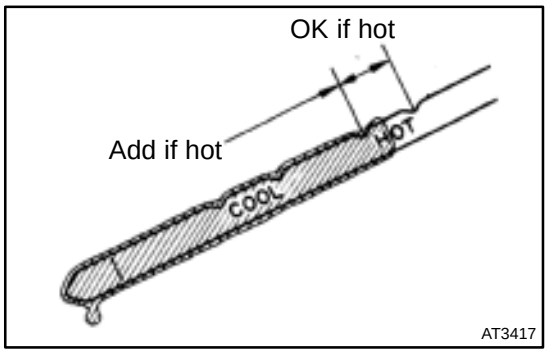

AT3417

(1) Park the vehicle on a level surface and set the parking brake.
(2) With the engine idling and the brake pedal depressed, shift the shift lever into all positions from the P to L position and return to the P position.
(3) Pull out the oil level gauge and wipe it clean.
(4) Push it back fully into the pipe.
(5) Pull it out and check that the fluid level is in the HOT range.

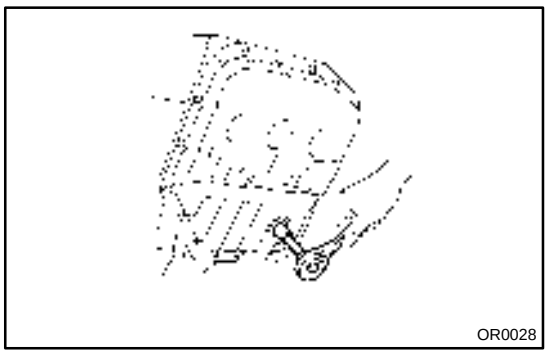
OR0028

If the level is at the low side, add new fluid.
Fluid type: ATF D–II or DEXRON®III (DEXRON®II)

NOTICE:
Do not overfill.

(b) Check the fluid condition.
If the fluid smells burnt or is black, replace it.

(c) Replace transaxle fluid
(1) Remove the drain plug and drain the fluid.
(2) Reinstall the drain plug securely.
(3) With the engine OFF, add new fluid through the oil filler pipe.

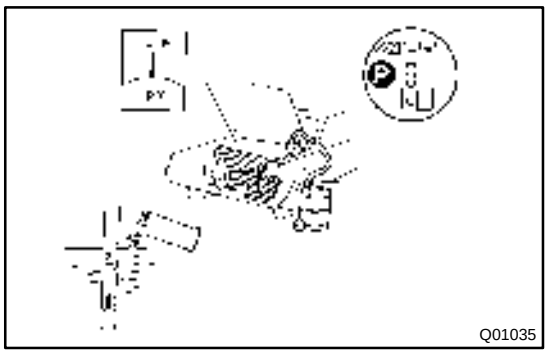

Fluid type: ATF D–II or DEXRON®III (DEXRON®II)
Capacity:
Drain and refill: 3.1 liters (3.3 US qts, 2.7 Imp. qts)

(4) Start the engine and shift the shift lever into all positions from P to L position and then shift into P position.
(5) With the engine idling, check the fluid level. Add fluid up to the COOL level on the dipstick.

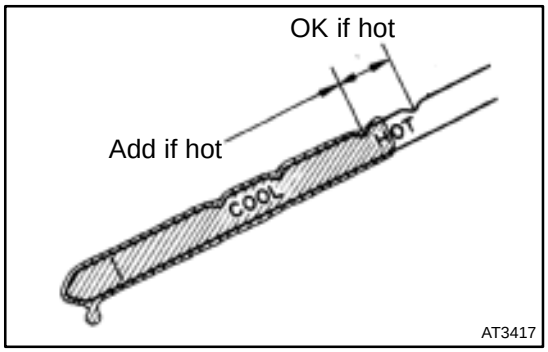

(6) Check the fluid level at the normal operating temperature 70 – 80˚C (158 – 176˚F) and add as necessary.

NOTICE:
Do not overfill.

(d) Check the fluid leaks.
Check for leaks in the transaxle.

If there are leaks, it is necessary to repair or replace O–rings, gaskets, oil seals, plugs or other parts.

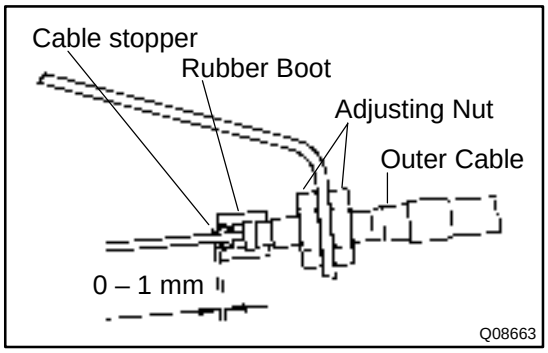

(e) Inspect and adjust the throttle cable
(1) Check that the throttle valve is fully closed.
(2) Check that the inner cable is not slack.
(3) Measure the distance between the outer cable end and stopper on the cable.
Standard distance: 0 – 1 mm (0 – 0.04 in.)

If the distance is not standard, adjust the cable by the adjusting nuts.

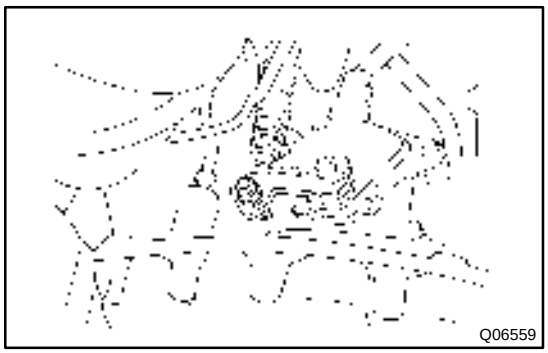

(f) Inspect and adjust the shift lever position.
When shifting the shift lever from the N position to other positions, check that the lever can be shifted smoothly and accurately to each position and that the position indicator correctly indicates the position.

If the indicator is not aligned with the correct position, carry out the following adjustment procedures:
(1) Loosen the nut on the control shaft lever.
(2) Push the control shaft lever fully downward.



(3) Return the control shaft lever 2 notches to the N position.
(4) Set the shift lever to the N position.
(5) While holding the shift lever lightly toward the R position side, tighten the shift lever nut.
Torque: 6.9 N·m (70 kgf·cm, 61 in.·lbf)
(6) Start the engine and make sure that the vehicle moves forward when shifting the lever from the N to D position and reverses when shifting it to the R position.

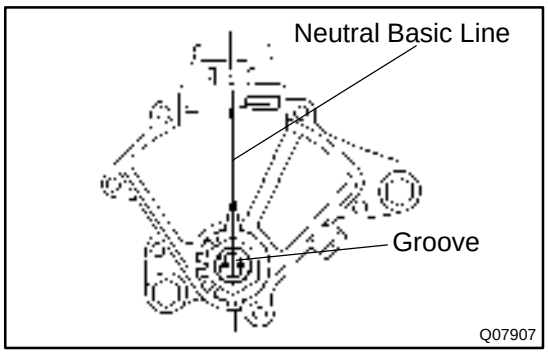

(g) Inspect and adjust the park/neutral position switch.
Check that the engine can be started with the shift lever only in the N or P position, but not in other positions.

If not as stated above, carry out the following adjustment procedures:

(1) Loosen the park/neutral position switch bolt and set the shift lever to the N position.
(2) Align the groove and neutral basic line.
(3) Hold in position and tighten the bolt.

Torque: 5.4 N·m (55 kgf·cm, 48 in·lbf)

For continuity inspection of the park/neutral position switch, see page AX–4.

(h) Check the idle speed.

Idle speed:
750 ± 50 rpm (In N position and A/C OFF)

8. MECHANICAL SYSTEM TESTS

(a) Measure the stall speed.
The object of this test is to check the overall performance of the transaxle and engine by measuring the stall speeds in the D and R positions.

NOTICE:

- **Do the test at normal ATF operation temperature 50 – 80˚C (122 – 176 ˚F).**
- **Do not continuously run this test longer than 5 seconds.**
- **To ensure safety, conduct this test in a wide, clear, level area which provides good traction.**
- **The stall test should be always carried out in pairs. One technician should observe the conditions of wheels or wheel stoppers outside the vehicle while the other is doing the test.**

(1) Chock the 4 wheels.
(2) Fully apply the parking brake.
(3) Connect OBD II scan tool or TOYOTA hand–held tester to DLC3.
(4) Start the engine and check idle speed.
(5) Keep you left foot pressed firmly on the brake pedal.
(6) Shift into the D position. Fully depress the accelerator pedal. Quickly read the stall speed at this time.

Stall speed: 2,300 ± 200 rpm

(7) Do the same test in R position.

Stall speed: 2,300 ± 200 rpm

Evaluation:

Problem	Possible cause
(a) Stall speed low in D and R positions	• Engine output may be insufficient • Stator one–way clutch is operating properly HINT: If more than 600 rpm below the specified value, the torque converter clutch could be faulty.
(b) Stall speed high in D position	• Line pressure too low • Forward clutch slipping • No.2 one–way clutch not operating properly • U/D one–way clutch not operating properly
(c) Stall speed high in R position	• Line pressure too low • Direct clutch slipping • 1st and reverse brake slipping • U/D brake slipping
(d) Stall speed high in D and R positions	• Line pressure too low • Improper fluid level • U/D one–way clutch not operating properly

(b) Measure the time lag.

When the shift lever is shifted while the engine is idling, there will be a certain time lapse or lag before the shock can be felt. This is used for checking the condition of the U/D direct clutch, forward clutch, direct clutch, and 1st and reverse brake.

NOTICE:

- **Do the test at normal operating ATF temperature 50 – 80˚C (122 – 176˚F).**
- **Make sure to allow 1 minute interval between tests.**
- **Take 3 measurements and take the average value.**

(1) Fully apply the parking brake.

(2) Connect OBD II scan tool or TOYOTA hand–held tester to DLC3.

(3) Start the engine and check idle speed.

Idle speed: 750 ± 50 rpm (In N position and A/C OFF)

(4) Shift the shift lever from the N to D position. Using a stop watch, measure the time it takes from shifting the lever until the shock is felt.

Time lag: N → D Less than 1.2 seconds

In the same way, measure the time lag for N → R.

Time lag: N → R Less than 1.5 seconds

Evaluation:

Problem	Possible cause
N → D time lag is longer	• Line pressure too low • Forward clutch worn • U/D one–way clutch not operating properly
N → R time lag is longer	• Line pressure too low • Direct clutch worn • 1st and reverse brake worn • U/D brake worn

9. HYDRAULIC TEST

(a) Measure the line pressure.

NOTICE:

- **Do the test at normal operating ATF temperature 50 – 80˚C (122 – 176˚F).**
- **The line pressure test should be always be carried out in pairs. One technician should observe the conditions of wheels or wheel stoppers outside the vehicle while the other is doing the test.**
- **Be careful to prevent SST's hose from interfering with the exhaust pipe.**

(1) Warm up the ATF.

(2) Remove the test plug on the transaxle case left side and connect SST.

SST 09992–00094 (09992–00230, 09992–00270)

(See page AX–16 for the location to connect SST)

(3) Chock the 4 wheels.

(4) Fully apply the parking brake.

(5) Start the engine and check idling speed.

(6) Keep your left foot pressed firmly on the brake pedal and shift into D position.

(7) Measure the line pressure when the engine is idling.

(8) Fully depress the accelerator pedal. Quickly read the highest line pressure when engine speed reaches stall speed.

NOTICE:

Release the accelerator pedal and stop test if the wheels begin to rotate before the engine speed reaches specified stall speed.

(9) In the same way, do the test in R position.

Specified line pressure:

Condition	D position kPa (kgf/cm^2, psi)	R position kPa (kgf/cm^2, psi)
Idling	373 – 422 (3.8 – 4.3, 54 – 61)	637 – 794 (6.5 – 8.1, 92 – 115)
Stall	735 – 863 (7.5 – 8.8, 107 – 125)	1,334 – 1,579 (13.6 – 16.1, 193 – 229)

If the measured pressures are not up to specified values, recheck the throttle cable adjustment and do a retest.

Evaluation

Problem	Possible cause
If the measured value in all position are higher	• Throttle cable out of adjustment • Throttle valve defective • Regulator valve defective
If the measured values at all position are lower	• Throttle cable out of adjustment • Throttle valve defective • Regulator valve defective • Oil pump defective • U/D direct clutch defective
If pressure is low in the D position only	• D position circuit fluid leakage • Forward clutch defective
If pressure is low in the R position only	• R position circuit fluid leakage • Direct clutch defective • 1st and reverse brake defective

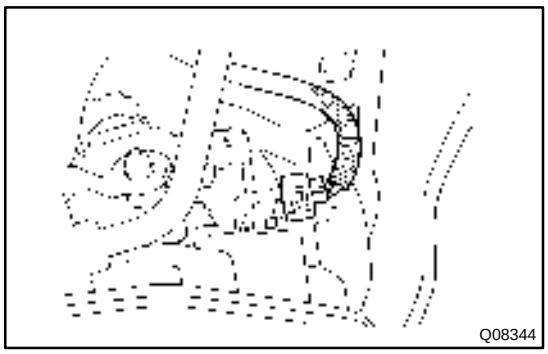
Q08344

10. MANUAL SHIFTING TEST

HINT:

With this test, it can be determined whether the trouble is within the electrical circuit or is a mechanical problem in the transaxle.

(a) Disconnect the solenoid wire.

(b) Inspect the manual driving operation.

Check that the shift and gear positions correspond with the table below.

Shift Position	Gear Position
D	O/D
2	3rd
L	1st
R	Reverse
P	Pawl Lock

HINT:

If the L, 2 and D position gear positions are difficult to distinguish, do the following road test.

- While driving, shift through the L, 2 and D positions. Check that the gear change corresponds to the shift position.

If any abnormality is found in the above test, the problem is in the transaxle itself.

(c) Connect the solenoid wire.

(d) Cancel out DTC (See page DI–126).

DI4OQ–02

PROBLEM SYMPTOMS TABLE

If a normal code is displayed during the diagnostic trouble code check but the trouble still occurs, check the circuits for each symptom in the order given in the charts on the following pages and proceed to the page given for troubleshooting.
The Matrix Chart is divided into 3 chapters.
Chapter 1: Electronic Circuit Matrix Chart
Chapter 2: On–vehicle Repair Matrix Chart
Chapter 3: Off–vehicle repair Matrix Chart
When troubleshooting, check Chapter1 first. If instructions are given in Chapter1 to proceed to Chapter 2 or 3, proceed as instructed.

(1) If the instruction ”Proceed to next circuit inspection shown on matrix chart” is given in the flow chart for each circuit, proceed to the circuit with the next highest number in the table to continue the check.
(2) If the trouble still occurs even though there are no abnormalities in any of the other circuits, then check and replace the ECM.

1. Chapter 1: Electronic Circuit Matrix Chart

Symptom	Suspect Area	See page
No up–shift (A particular gear, from 1st to 3rd gear, is not up-shifted.)	1. ECM	DI–139
No up–shift (3rd → O/D)	1. O/D main switch circuit & O/D OFF indicator light circuit 2. O/D cancel signal circuit 3. ECM	DI–164 DI–169 DI–139
No down–shift (O/D → 3rd)	1. O/D main switch circuit & O/D OFF indicator light circuit 2. O/D cancel signal circuit 3. ECM	DI–164 DI–169 DI–139
No down–shift (A particular gear, from 1st to 3rd gear, is not down–shifted.)	1. ECM	DI–139
No lock–up	1. ECM	DI–139
No lock–up off	1. ECM	DI–139
Shift point too high or too low	1. ECM	DI–139
Up–shift to O/D from 3rd while O/D main switch is OFF	1. O/D main switch circuit & O/D OFF indicator light circuit 2. ECM	DI–164 DI–139
Up–shift to O/D from 3rd while engine is cold	1. ECM	DI–139
No kick–down	1. ECM	DI–139
Engine stalls when starting off or stopping	1. ECM	DI–139

2. Chapter 2: On–Vehicle Repair (★: A241E, A244E, A245E, A246E, AUTOMATIC TRANSAXLE Repair Manual Pub. No. RM390U)

Symptom	Suspect Area	See page
Does not move in any forward position	1. Off–vehicle repair matrix chart	DI–140
Does not move in reverse position	1. Off–vehicle repair matrix chart	DI–140
Does not move in any position	1. Primary regulator valve 2. Manual valve 3. Throttle valve 4. Off–vehicle repair matrix chart	★ ★ ★ DI–140
No up–shift (1st → 2nd)	1. 1–2 shift valve 2. Off–vehicle repair matrix chart	★ DI–140
No up–shift (2nd → 3rd)	1. 2–3 shift valve 2. Off–vehicle repair matrix chart	★ DI–140

No up–shift (3rd → O/D)	1. 3–4 shift valve 2. Off–vehicle repair matrix chart	★ DI–140
No down–shift (O/D → 3rd)	1. 3–4 shift valve 2. Off–vehicle repair matrix chart	★ DI–140
No down–shift (3rd → 2nd)	1. 2–3 shift valve 2. Off–vehicle repair matrix chart	★ DI–140
No down–shift (2nd → 1st)	1. 1–2 shift valve 2. Off–vehicle repair matrix chart	★ DI–140
Harsh engagement (N → R)	1. C_2 accumulator 2. Off–vehicle repair matrix chart	★ DI–140
Harsh engagement (N → D)	1. C_1 accumulator 2. Off–vehicle repair matrix chart	★ DI–140
Harsh engagement (N → L)	1. C_1 accumulator 2. Low coast modulator valve 3. Off–vehicle repair matrix chart	★ ★ DI–140
Harsh engagement (1st → 2nd: D position)	1. Accumulator control valve 2. B_2 accumulator 3. Off–vehicle repair matrix chart	★ ★ DI–140
Harsh engagement (1st → 2nd: 2 position)	1. B_2 accumulator 2. Accumulator control valve 3. 2nd coast modulator valve 4. Off–vehicle repair matrix chart	★ ★ ★ DI–140
Harsh engagement (1st → 2nd → 3rd → O/D)	1. Throttle valve 2. Primary regulator valve	★ ★
Harsh engagement (2nd → 3rd)	1. C_2 accumulator 2. Accumulator control valve 3. Off–vehicle repair matrix chart	★ ★ ★
Harsh engagement (3rd → O/D)	1. B_2 accumulator 1. C_3 accumulator 3. Off–vehicle repair matrix chart	★ ★ DI–140
Harsh engagement (O/D → 3rd)	1. B_4 accumulator 2. Off–vehicle repair matrix chart	★ DI–140
Harsh engagement (3rd → 2nd)	1. C_2 accumulator 2. Off–vehicle repair matrix chart	★ DI–140
Slip (Forward and reverse)	1. Primary regulator valve 2. Off–vehicle repair matrix chart	★ DI–140
Slip (R position)	1. Off–vehicle repair matrix chart	DI–140
Slip (1st position)	1. Off–vehicle repair matrix chart	DI–140
Slip (2nd position)	1. Off–vehicle repair matrix chart	DI–140
Slip (3rd position)	1. Off–vehicle repair matrix chart	DI–140
Slip (O/D position)	1. Off–vehicle repair matrix chart	DI–140
No engine braking (1st: L position)	1. Low coast modulator valve 2. Off–vehicle repair matrix chart	★ DI–140
No engine braking (2nd: 2 position)	1. 2nd coast modulator valve 2. Off–vehicle repair matrix chart	★ DI–140
No kick–down	1. 1–2 shift valve 2. 2–3 shift valve 3. 3–4 shift valve	★ ★ ★

Poor acceleration	1. Primary regulator valve 2. Off–vehicle repair matrix chart	★ DI–140
No lock–up	1. Lock–up relay valve 2. Off–vehicle repair matrix chart	★ DI–140

3. Chapter 3: Off–Vehicle Repair (★: A241E, A244E, A245E, A246E, AUTOMATIC TRANSAXLE Repair Manual Pub. No. RM390U)

Symptom	Suspect Area	See page
Does not move in any forward position	1. Forward clutch (C_1)	★
Does not move in reverse position	1. Direct clutch (C_2) 2. 1st and reverse brake (B_3) 3. U/D brake (B_4)	★ ★ ★
Does not move in any position	1. Torque converter clutch 2. Oil pump 3. U/D one–way clutch (F_3) 4. Front planetary gear 5. Rear planetary gear 6. On–vehicle repair matrix chart	AX–21 ★ ★ ★ ★ DI–140
No up–shift (1st → 2nd)	1. 2nd brake (B_2) 2. No. 1 one–way clutch (F_1) 3. On–vehicle repair matrix chart	★ ★ ★
No up–shift (2nd → 3rd)	1. Direct clutch (C_2) 2. On–vehicle repair matrix chart	★ ★
No up–shift (3rd → O/D)	1. U/D clutch (C_3) 2. On–vehicle repair matrix chart	★ ★
No down–shift (O/D → 3rd)	1. U/D brake (B_4) 2. U/D one–way clutch (F_3) 3. On–vehicle repair matrix chart	★ ★ ★
No up–shift (3rd → 2nd)	1. No.1 one–way clutch (F_1) 2. On–vehicle repair matrix chart	★ ★
No up–shift (2nd → 1st)	1. No. 2 one–way clutch (F_2) 2. On–vehicle repair matrix chart	★ ★
Harsh engagement (N → R)	1. Direct clutch (C_2) 2. 1st and reverse brake (B_3) 3. On–vehicle repair matrix chart	★ ★ ★
Harsh engagement (N → D)	1. Forward clutch (C_1) 2. On–vehicle repair matrix chart	★ ★
Harsh engagement (N → L)	1. Forward clutch (C_1) 2. 1st and reverse brake (B_3) 3. On–vehicle repair matrix chart	★ ★ ★
Harsh engagement 1st → 2nd (D position)	1. 2nd brake (B_2) 2. No.1 one–way clutch (F_1) 3. On–vehicle repair matrix chart	★ ★ DI–140

Harsh engagement 1st → 2nd (2 position)	1. 2nd coast brake (B_1) 2. 2nd brake (B_2) 3. No.1 one–way clutch (F_1) 4. On–vehicle repair matrix chart	★ ★ ★ DI–140
Harsh engagement (1st → 2nd → 3rd → O/D)	1. On–vehicle repair matrix chart	DI–140
Harsh engagement (2nd → 3rd)	1. Direct clutch (C_2) 2. On–vehicle repair matrix chart	★ DI–140
Harsh engagement (3rd → O/D)	1. U/D clutch (C_3) 2. On–vehicle repair matrix chart	★ DI–140
Harsh engagement (O/D → 3rd)	1. U/D brake (B_4) 2. On–vehicle repair matrix chart	★ DI–140
Harsh engagement (3rd → 2nd)	1. Direct clutch (C_2) 2. On–vehicle repair matrix chart	★ DI–140
Harsh engagement Lock–up	1. Torque converter clutch	AX–21
Slip (Forward & Reverse)	1. Torque converter clutch 2. Oil pump 3. On–vehicle repair matrix chart	AX–21 ★ DI–140
Slip (R position)	1. Direct clutch (C_2) 2. 1st and reverse brake (B_3)	★ ★
Slip (1st)	1. Forward clutch (C_1) 2. No. 2 one–way clutch (F_2) 3. U/D one–way clutch (F_3)	★ ★ ★
Slip (2nd)	1. Forward clutch (C_1) 2. 2nd brake (B_2) 3. No. 1 one–way clutch (F_1) 4. U/D one–way clutch (F_3)	★ ★ ★ ★
Slip (3rd)	1. Forward clutch (C_1) 2. Direct clutch (C_2) 3. U/D one–way clutch (F_3)	★ ★ ★
Slip (O/D)	1. Forward clutch (C_1) 2. Direct clutch (C_2) 3. U/D clutch (C_3)	★ ★ ★
No engine braking (1st: L position)	1. 2nd coast brake (B_1) 2. On–vehicle repair matrix chart	★ DI–140
No engine braking (2nd: 2 position)	1. 2nd coast brake (B_3) 2. On–vehicle repair matrix chart	★ DI–140
No kick–down	1. On–vehicle repair matrix chart	DI–140
Poor acceleration	1. Torque converter clutch 2. Forward clutch (C_1) 3. On–vehicle repair matrix chart	★ ★ DI–140
No lock–up	1. Torque converter clutch 2. On–vehicle repair matrix chart	AX–21 DI–140
Engine stalls when staring off or stopping	1. Torque converter clutch	AX–21

DI4OP–02

TERMINALS OF ECM

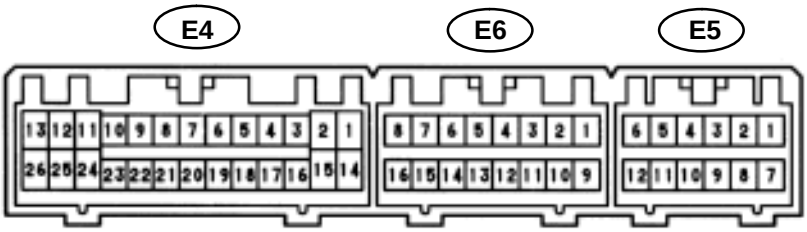

Z18952

Symbols (Terminals No.)	Wiring Color	Condition	STD Voltage (V)
S1 ↔ E1 (E4–20 ↔ E4–26)	P ↔ BR	IG OFF and disconnect ECM connector	11 – 15 Ω
		IG ON	9 – 14
		1st or 2nd gear	9 – 14
		3rd or O/D gear	Below 1.5
S2 ↔ E1 (E4–19 ↔ E4–26)	P–G ↔ BR	IG OFF and disconnect ECM connector	11 – 15 Ω
		IG ON	Below 1.5
		2nd or 3rd gear	9 – 14
		1st or O/D gear	Below 1.5
SL ↔ E1 (E4–23 ↔ E4–26)	P–B ↔ BR	IG OFF and disconnect ECM connector	11 – 15 Ω
		IG ON	Below 1.5
		Vehicle driving under lock–up position	9 – 14
SP2 ↔ E1 (E4–16 ↔ E4–26)	LG–B ↔ BR	Turn one front wheel slowly	Pulse signal is output Below 1.5 ↔ 4 – 6
OD1 ↔ E1 (E5–3 ↔ E4–26)	Y–R ↔ BR	IG ON	9 – 14
OD2 ↔ E1 (E5–9 ↔ E4–26)	R–W ↔ BR	O/D main switch ON (O/D ON)	9 – 14
		O/D main switch OFF (O/D OFF)	Below 3
L ↔ E1 (E4–5 ↔ E4–26)	LG ↔ BR	IG ON	
		Shift lever L position	7.5 – 14
		Shift lever other than L position	Below 1.5
R ↔ E1 (E4–8 ↔ E4–26)	R–B ↔ BR	IG ON and shift lever R position	7.5 – 14
		IG ON and shift lever other than R position	Below 1.5
2 ↔ E1 (E4–6 ↔ E4–26)	LG–R ↔ BR	IG ON and shift lever 2 position	7.5 – 14
		IG ON and shift lever other than 2 position	Below 1.5
NSW ↔ E1 (E4–22 ↔ E4–14)	B–W ↔ BR	IG ON and shift lever P or N position	Below 3
		IG ON and shift lever other than P or N position	9 – 14

DI4QR–01

DTC	12	Actuator Magnetic Clutch Circuit

CIRCUIT DESCRIPTION

This circuit turns on the magnetic clutch inside the actuator during cruise control operation according to the signal from the ECU. If a malfunction occurs in the actuator or speed sensor, etc. during cruise control, the rotor shaft between the motor and control plate is released.
When the brake pedal is depressed, the stop light switch turns on, supplying electrical power to the stop light. Power supply to the magnetic clutch is mechanically cut and the magnetic clutch is turned OFF.
When driving downhill, if the vehicle speed exceeds the set speed by 15 km/h (9 mph), the ECU turns the magnetic clutch OFF. If the vehicle speed later drops to within 10 km/h (6 mph) above the set speed, then cruise control at the set speed is resumed.

DTC No.	Detection Item	Trouble Area
12	Short in magnetic clutch circuit. • Open (0.8 sec.) in magnetic clutch circuit.	• Cruise control actuator magnetic clutch • Harness or connector between ECU and magnetic clutch, magnetic clutch and body ground • Cruise control ECU

WIRING DIAGRAM

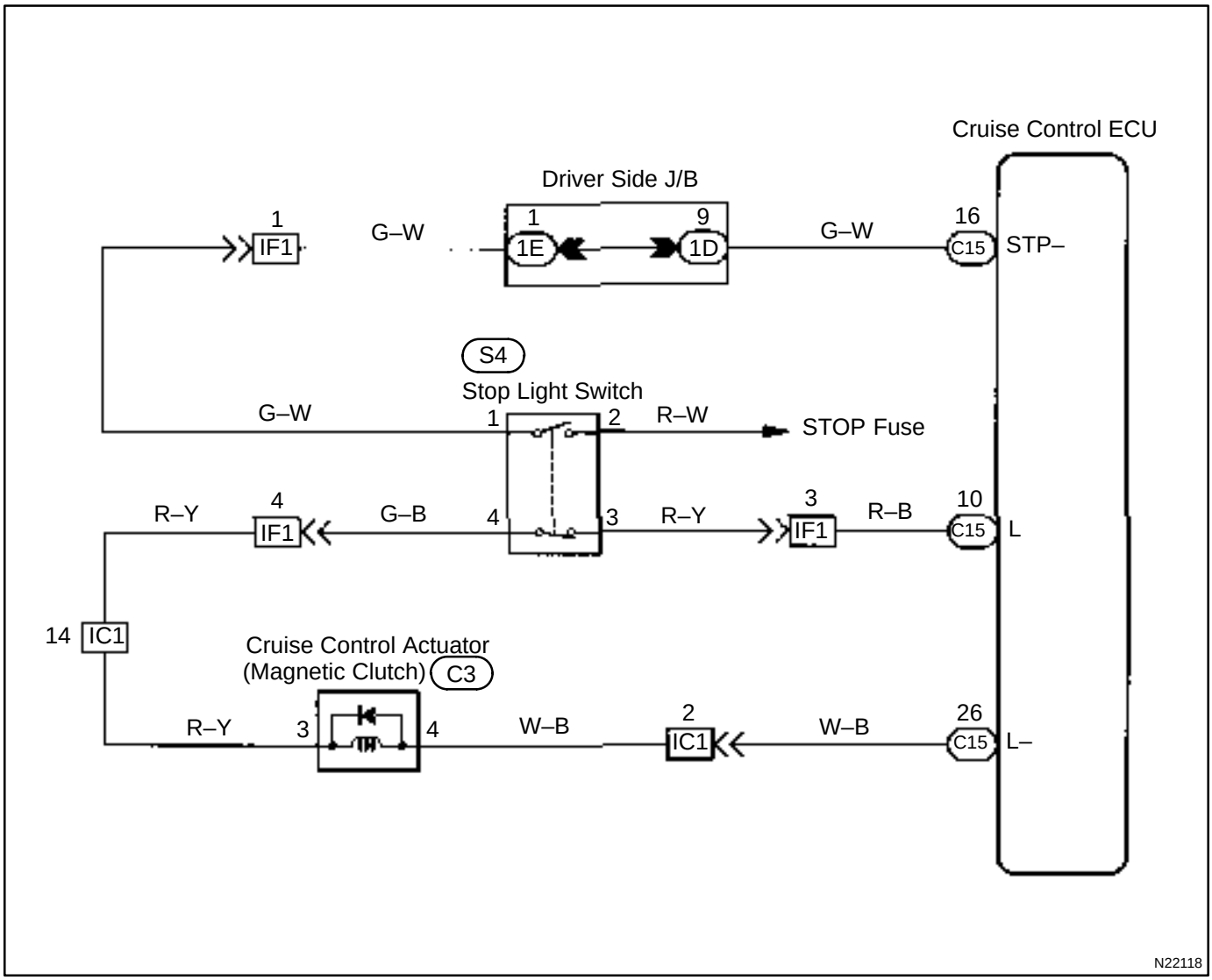

INSPECTION PROCEDURE

1	**Check STOP fuse.**

Instrument Panel Junction Block



PREPARATION:

(a) Remove the fuse box opening cover.

(b) Remove STOP fuse from instrument panel junction block.

OK:

Check continuity of STOP fuse.

OK:

Continuity.

NG → **Replace STOP fuse.**

OK

2	**Check harness and connector between actuator and cruise control actuator (See page IN–27).**

NG → **Repair or replace harness or connector.**

OK

Check and replace cruise control ECU (See page IN–27).

DI4QS–01

DTC	14	Actuator Mechanical Malfunction

CIRCUIT DESCRIPTION

See page DI–310.

WIRING DIAGRAM

See page DI–310.

INSPECTION PROCEDURE

1	Check actuator arm locking operation

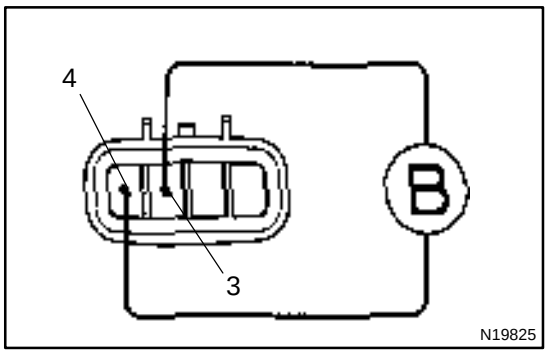

PREPARATION:

(a) Ignition switch OFF.

(b) Disconnect actuator connector.

CHECK:

(a) Connect the positive (+) lead from the battery to the terminal 3 of actuator and the negative (–) lead to terminal 4.

NOTICE:

Do not connect the high tension cables to the wrong battery terminal. You will damage the cruise control actuator.

(b) Move the control plate by hand.

OK:

Control plate doesn't move. (Magnetic clutch on)

NG → **Replace cruise control actuator.**

OK

2	Check actuator operation.

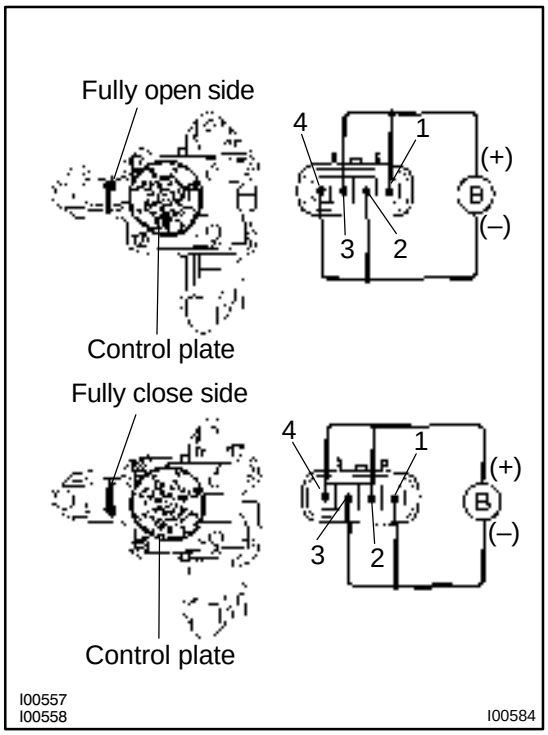

PREPARATION:

Disconnect the actuator connector.

CHECK:

Connect the positive (+) lead from the battery to terminals 1 and 3 of actuator, connect the negative (–) lead to terminals 2 and 4 of actuator.

OK:

Control arm moves to full open side.

CHECK:

Connect the positive (+) lead from the battery to terminals 2 and 4 of actuator, connect the negative (–) lead to terminals 1 and 3 of actuator.

OK:

Control arm moves to full close side.

NG → **Replace actuator.**

OK

3	Check harness and connector between actuator and cruise control ECU (See page IN–27).

NG → **Repair or replace harness or connector.**

OK

Check and replace cruise control ECU (See page IN–27).

DI4QT–01

DTC	21	Open in Vehicle Speed Sensor Circuit

CIRCUIT DESCRIPTION

The vehicle speed sensor circuit is sent to cruise control ECU as vehicle speed signal.
For each rotation of the shaft, the vehicle speed sensor sends a signal through the combination meter to the cruise control ECU (See the following).
The ECU calculates the vehicle speed from this pulse frequency.

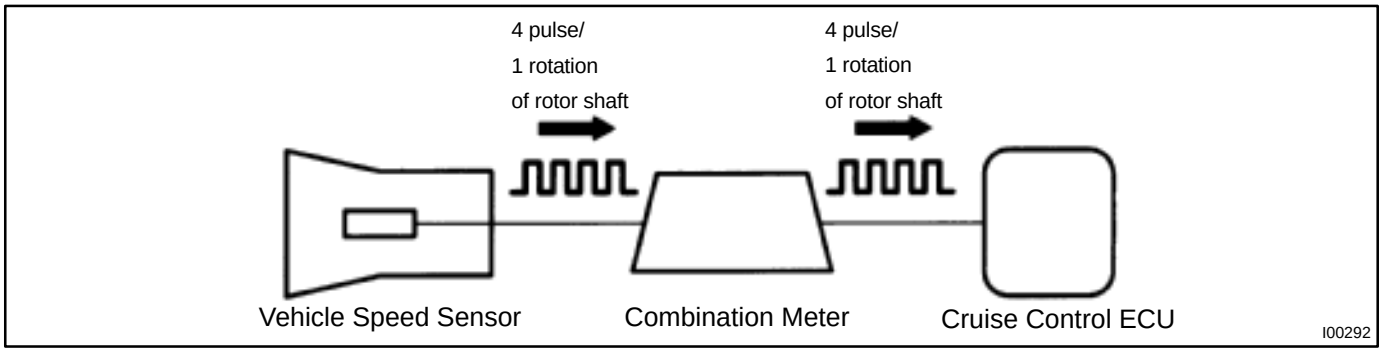

DTC No.	Detection Item	Trouble Area
21	Speed signal is not input to the cruise control ECU while cruise control is set.	• Vehicle speed sensor • Combination meter • Cruise control ECU

WIRING DIAGRAM

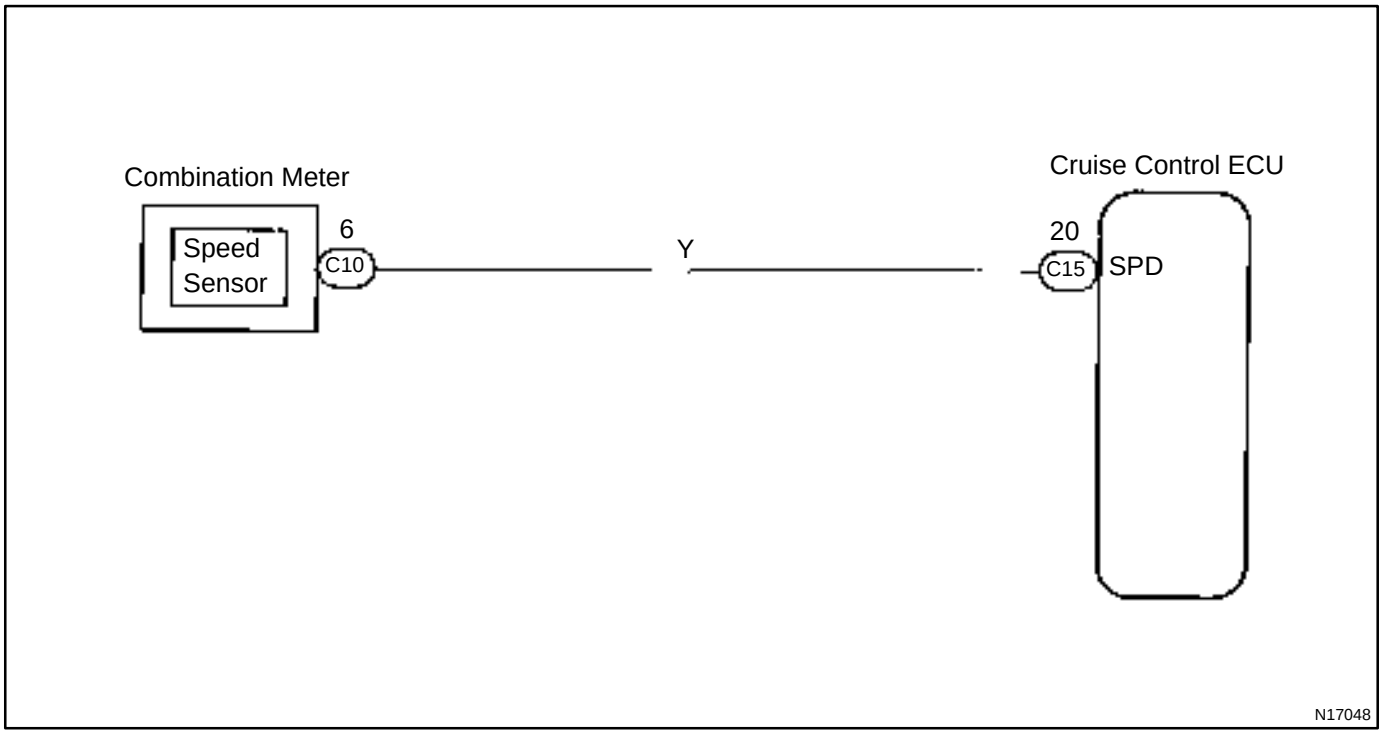

INSPECTION PROCEDURE

1	**Input signal check.**

Vehicle Speed	Indicator Light Blinking Pattern
Above 40 km/h (25 mph)	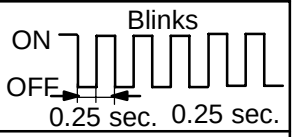
Below 40 km/h (25 mph)	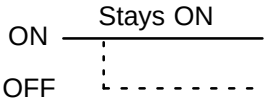

CHECK:

(a) See input signal check on page DI–301.

(b) Check indicator light operation when driving with vehicle speed above 40 km/h (25 mph), and with vehicle speed below 40 km/h (25 mph).

OK:

Vehicle speed above 40 km/h (25 mph):
Indicator light blinks
Vehicle speed below 40 km/h (25 mph):
Indicator light stays on

OK → **Check and replace cruise control ECU (See page IN–27).**

NG

2	**Check harness and connector between speed meter and cruise control ECU (See page IN–27).**

NG → **Repair or replace harness or connector.**

OK

3	**Check vehicle speed sensor (See page BE–35).**

NG → **Replace vehicle speed sensor.**

OK

Check and replace cruise control ECU (See page IN–27).

DI4QU–01

DTC	23	Vehicle Speed Signal Abnormal

CIRCUIT DESCRIPTION

See page DI–316.

DTC No.	Detection Item	Trouble Area
23	• Actual vehicle speed has dropped either by 16 km/h (10 mph) or more below the set speed, or by 20 % or more of the set speed. • Vehicle speed sensor pulse is abnormal. (When speed signal is not input to the ECU below 0.2 sec., code will be displayed.)	• Vehicle speed sensor • Harness or connector in SPD circuit • Cruise control ECU

WIRING DIAGRAM

See page DI–316.

INSPECTION PROCEDURE

1	**Check vehicle speed sensor (See page BE–35).**

NG → **Replace vehicle speed sensor.**

OK

Check and replace cruise control ECU (See page IN–27).

DI4QV–01

DTC	32	Control Switch Circuit (Cruise Control Switch)

CIRCUIT DESCRIPTION

This circuit carries the SET/COAST, RESUME/ACCEL and CANCEL signals (each voltage) to the ECU.

DTC No.	Detection Item	Trouble Area
32	Short in control switch circuit.	• Cruise control switch • Harness or connector between control switch and cruise control ECU • Cruise control ECU

WIRING DIAGRAM

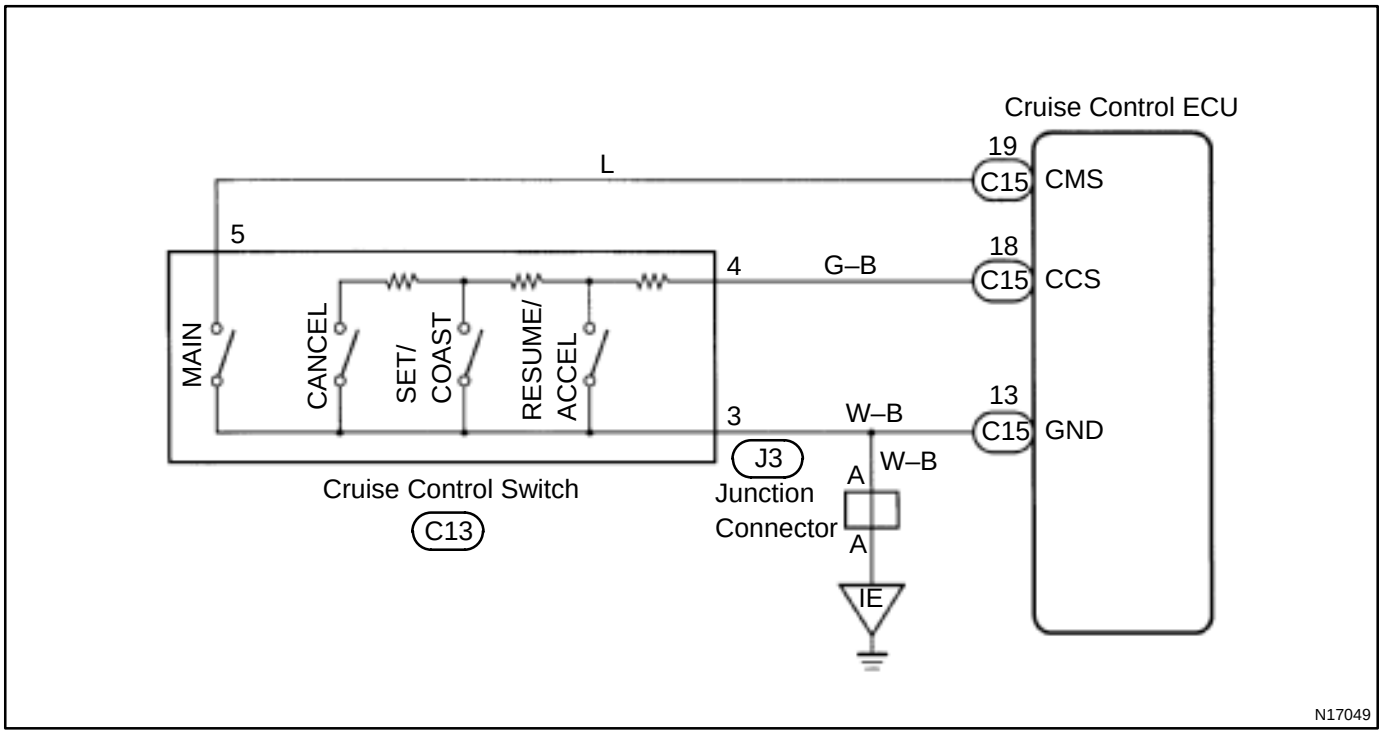

INSPECTION PROCEDURE

1	Input signal check.

Input Signal	Indicator Light Blinking Pattern
SET/COAST switch	2 Pulses: ON / OFF
RESUME/ACCEL switch	3 Pulses: ON / OFF
CANCEL switch	SW OFF / SW ON: ON / OFF

PREPARATION:

(a) See input signal check on page DI–301.

(b) Check the indicator light operation when each of the SET/COAST, RESUME/ACCEL and CANCEL is turned ON.

OK:

SET/COAST, RESUME/ACCEL switch

The signals shown in the table on the left should be output when each switch is ON. The signal should disappear when the switch is turned OFF.

CANCEL switch

The indicator light goes off when the cancel switch is turned ON.

OK	Wait and see.

NG

2	Check control switch.

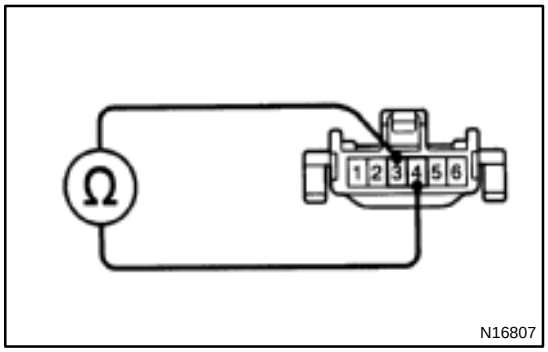

PREPARATION:

(a) Remove steering wheel center pad.

(b) Disconnect control switch connector.

CHECK:

Measure resistance between terminals 3 and 4 of control switch connector when control switch is operated.

OK:

Switch position	Resistance (Ω)
Neutral	∞ (No continuity)
RES/ACC	50 – 80
SET/COAST	180 – 220
CANCEL	400 – 440

NG	Replace cruise control switch.

OK

3	**Check harness and connector between cruise control ECU and control switch (See page IN–27).**

NG → **Repair or replace harness or connector.**

OK

4	**Input signal check (See step 1).**

OK → **Wait and see.**

NG

Check and replace cruise control ECU (See page IN–27).

DI4QW–01

DTC	51	Idle Signal Circuit

CIRCUIT DESCRIPTION

When the idle switch in turned ON, a signal is sent to the ECU. The ECU uses this signal to correct the discrepancy between the throttle valve position and the actuator position sensor value to enable accurate cruise control at the set speed. If the idle switch is malfunctioning, problem symptoms also occur in the engine, so also inspect the engine.

DTC No.	Detection Item	Trouble Area
51	Short in idle signal circuit.	• Harness or connector between cruise control ECU and throttle position sensor • Throttle position sensor • Cruise control ECU

WIRING DIAGRAM

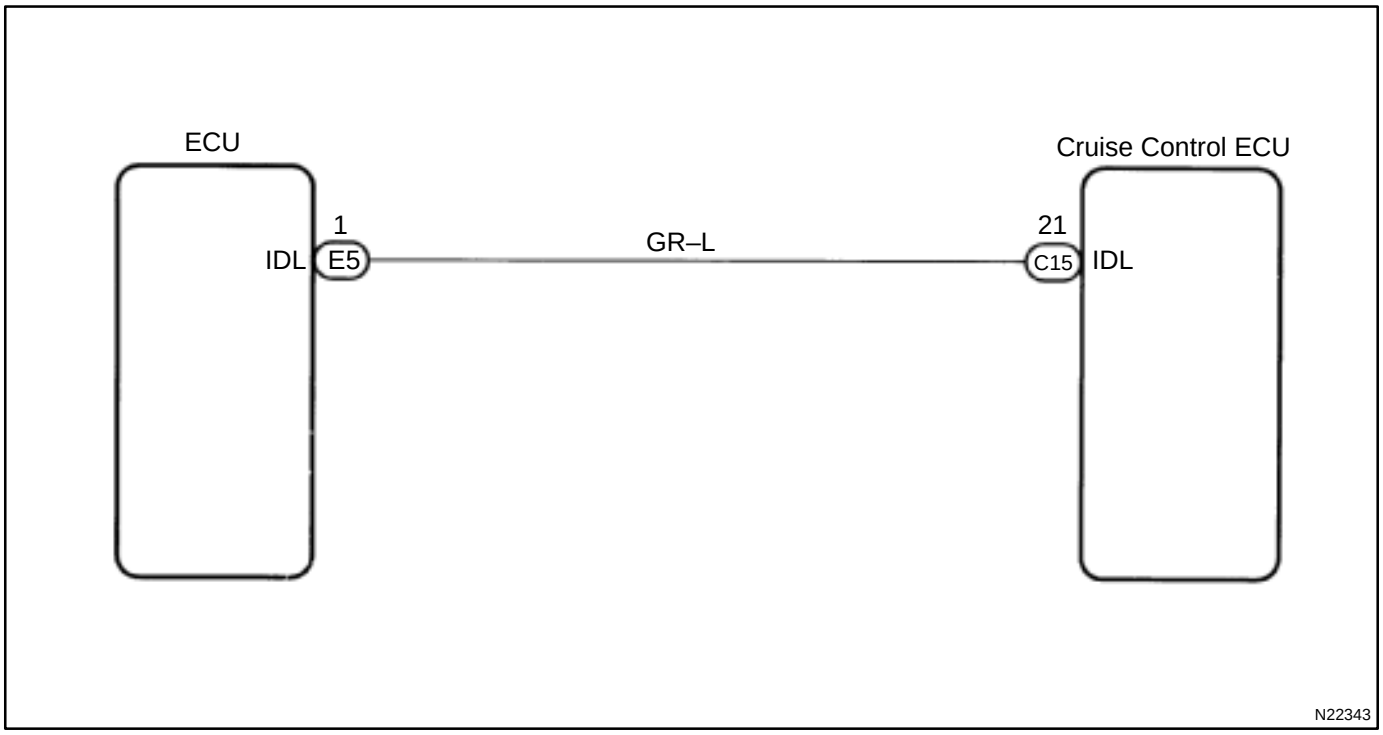

INSPECTION PROCEDURE

1	**Check throttle position sensor circuit (See page DI–36).**

NG → **Replace throttle position sensor.**

OK

2	**Check harness and connector between ECM and throttle position sensor (See page IN–27).**

NG → **Repair or replace harness or connector.**

OK

3	**Check harness and connector between cruise control ECU and throttle position sensor (See page IN–27).**

NG → **Repair or replace harness or connector.**

OK

Check and replace cruise control ECU (See page IN–27).

DI4QQ–01

CIRCUIT INSPECTION

DTC	11, 15	Actuator Motor Circuit

CIRCUIT DESCRIPTION

The actuator motor is operated by signals from the ECU. Acceleration and deceleration signals are transmitted by changes in the Duty Ratio (See note below).

Duty Ratio

The duty ratio is the ratio of the period of continuity in one cycle. For example, if A is the period of continuity in one cycle, and B is the period of non–continuity, then.

$$\text{Duty Ratio} = \frac{A}{A + B} \times 100\ (\%)$$

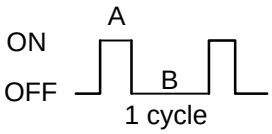

DTC No.	Detection Item	Trouble Area
11	• Short in actuator motor circuit.	• Cruise control actuator • Harness or connector between actuator and cruise control ECU • Cruise control ECU
15	• Open in actuator motor circuit.	• Cruise control actuator

WIRING DIAGRAM

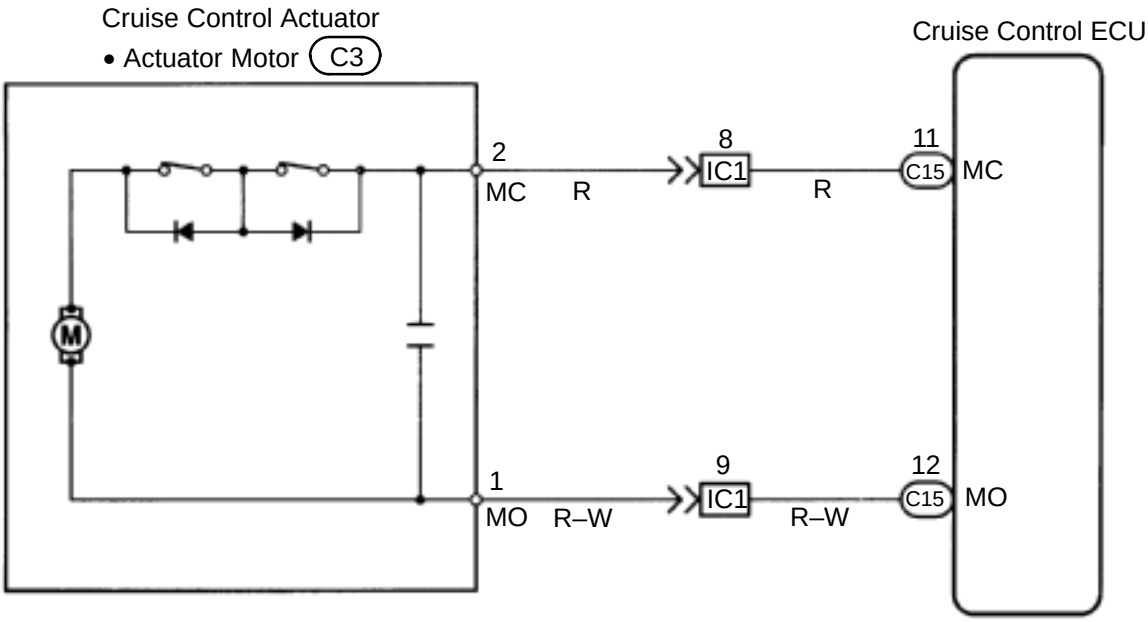

N22117

INSPECTION PROCEDURE

1	**Check resistance between terminals MO and MC of cruise control actuator.**

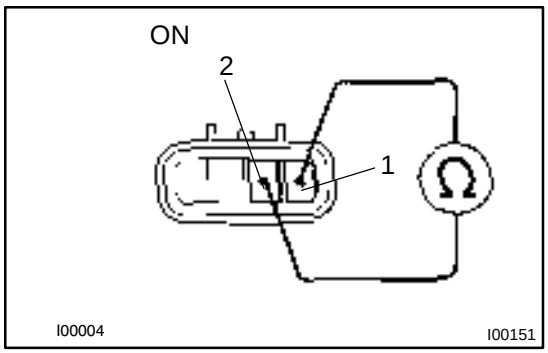

PREPARATION:

(a) Ignition switch ON.

(b) Disconnect actuator connector.

CHECK:

Measure resistance between terminals 1 and 2.

HINT:

If control plate position is fully opened or fully closed, resistance can not measure.

OK:

Resistance: more than 4.2 Ω

NG → **Replace actuator assembly.**

OK

2	**Check wire harness and connector between terminals MO of cruise control ECU and MO of cruise control actuator (See page IN–27).**

NG → **Repair or replace harness or connector.**

OK

Replace cruise control ECU.
(See page IN–27).

DI4R2–01

Back–up Power Source Circuit

CIRCUIT DESCRIPTION

The ECU back–up power source provides power even when the ignition switch is off and is used for DTC memory, etc.

WIRING DIAGRAM

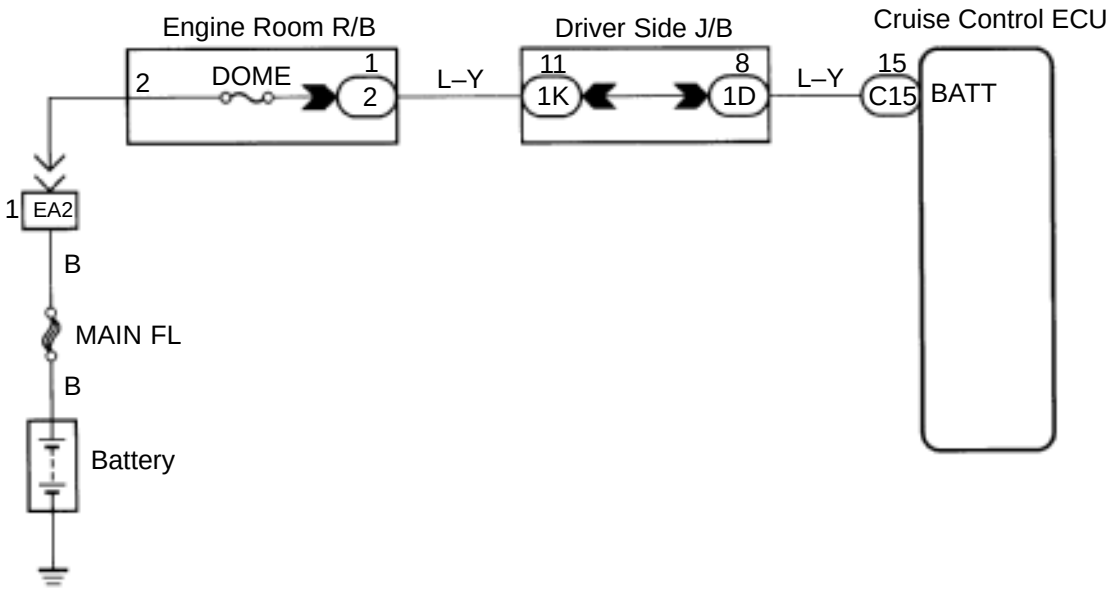

INSPECTION PROCEDURE

1	**Check DOME fuse.**

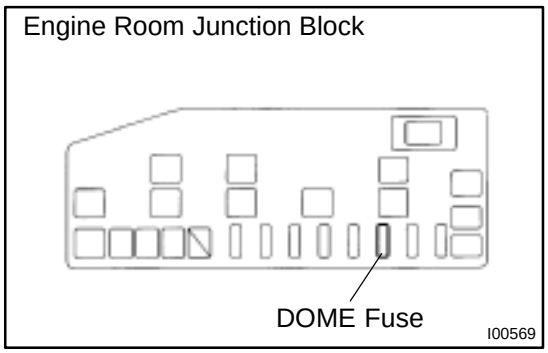

PREPARATION:

Remove DOME fuse from engine room junction block.

CHECK:

Check continuity of DOME fuse.

OK:

Continuity

NG → **Check for short in all the harness and components connected to the DOME fuse.**

OK

2	**Check voltage between terminal BATT of ECU connector and body ground.**

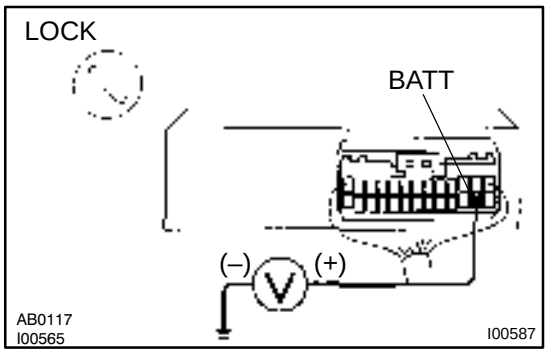

PREPARATION:

Remove ECU with connector still connected.

CHECK:

Measure voltage between terminal BATT of ECU connector and body ground.

OK:

Voltage: 10 – 14 V

OK

Proceed to next circuit inspection shown on matrix chart (See page DI–308).

NG

Check and repair harness and connector between battery and ECU (See page IN–27).

DI4R6–01

Actuator Control Cable Inspection

OK:

(a) Check that the actuator, control cable and throttle link are properly installed and that the cable and link are connected correctly.

(b) Check that the actuator and bell crank are operating smoothly.

(c) Check that the cable is not loose or too tight.

OK:

Freeplay: less than 10 mm

HINT:

- If the control cable is very loose, the vehicle's loss of speed going uphill will be large.
- If the control cable is too tight, the idle RPM will become high.

DI4R0–01

Clutch Switch Circuit

CIRCUIT DESCRIPTION

When the clutch pedal is depressed, the clutch switch sends a signal to the cruise control ECU.
When the signal is input to the cruise control ECU during cruise control driving, the cruise control ECU cancels cruise control.

WIRING DIAGRAM

Refer to PNP switch circuit on page DI–330.

INSPECTION PROCEDURE

1	**Check starter operation.**

CHECK:

Check that the starter operates normally and that the engine starts.

NG → **Proceed to engine troubleshooting (See page DI–1).**

OK

2	**Input signal check.**

Input Signal	Indicator Light Blinking Pattern
Clutch switch OFF (Depress clutch pedal)	Light: ON (SW ON) / OFF (SW OFF)

PREPARATION:

See input signal check on page DI–301.

CHECK:

Check the indicator light when the clutch pedal is depressed.

OK:

The indicator light goes off when the clutch pedal is depressed.

OK → **Proceed to next circuit inspection shown on matrix chart (See page DI–308).**

NG

3	**Check voltage between terminal D of cruise control ECU and body ground.**

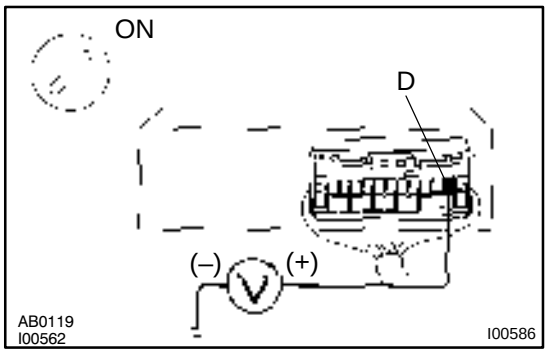

PREPARATION:

Turn ignition switch ON.

CHECK:

Measure voltage between terminal D of ECU connector and body ground, when the clutch pedal is depressed.

OK:

Switch Position	Voltage
ON (pedal depressed)	Below 1 V
OFF	10 – 16 V

OK → **Proceed to next circuit inspection shown on matrix chart (See page DI–308).**

NG

4	**Check for open in harness and connector between ECU and GAUGE fuse (See page IN–27).**

NG → **Repair or replace harness or connector.**

OK

Check and replace cruise control ECU (See page IN–27).

DI4R5–01

Diagnosis Circuit

CIRCUIT DESCRIPTION

This circuit sends a signal to the ECU that DTC output is required.

WIRING DIAGRAM

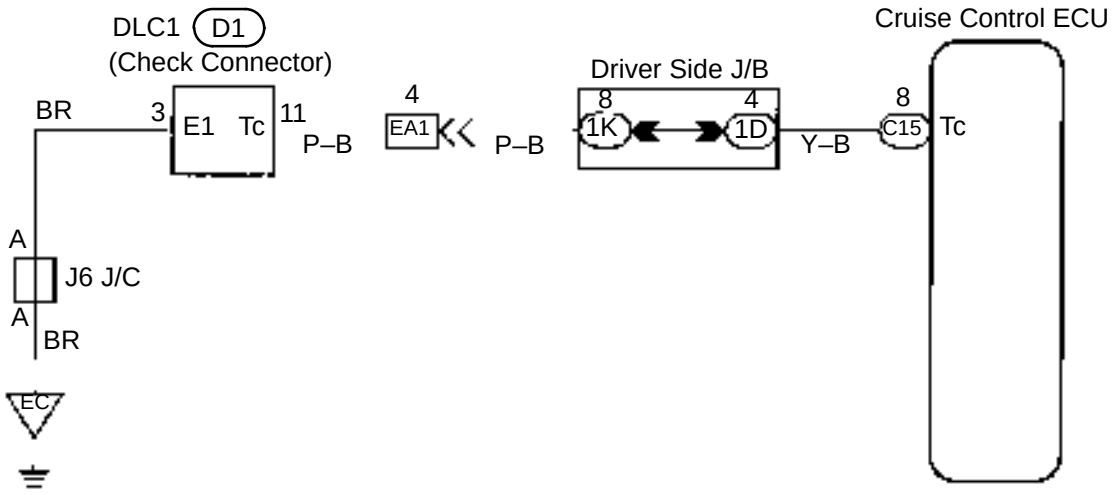

INSPECTION PROCEDURE

1	**Check voltage between terminals Tc and E_1 of DLC1.**

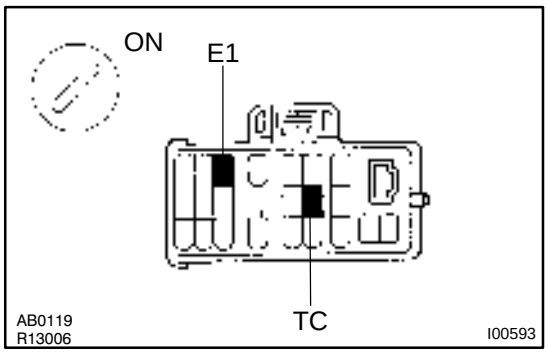

PREPARATION:

(a) Turn ignition switch ON.

(b) Measure voltage between terminals Tc and E_1 of DLC1.

CHECK:

OK:

Voltage: 10 – 14 V

NG → **Proceed to next circuit inspection shown on matrix chart (See page DI–308).**

OK

2	**Check for open and short in harness and connector between ECU and DLC1, DLC1 and body ground (See page IN–27).**

NG → **Repair or replace harness or connector.**

OK

Check and replace ECU (See page IN–27).

DI4QY–01

Electronically Controlled Transaxle Communication Circuit

CIRCUIT DESCRIPTION

When driving uphill under cruise control, in order to reduce shifting due to ON–OFF overdrive operation and to provide smooth driving, when down shifting in the electronic controlled transaxle occurs, a signal to prevent upshift until the end of the uphill slope is sent from the cruise control ECU to the electronic controlled transaxle.

Terminal ECT of the cruise control ECU detects the shift change signal (output to electronically controlled transaxle No. 2 solenoid) from the electronically controlled transaxle.

If vehicle speed down, also when terminal electronically controlled transaxle of the cruise control ECU receives down shifting signal, it sends a signal from terminal OD to OD1 to cut overdrive until the end of the uphill slope, and the gear shifts are reduced and gear shift points in the electronically controlled transaxle are changed.

WIRING DIAGRAM

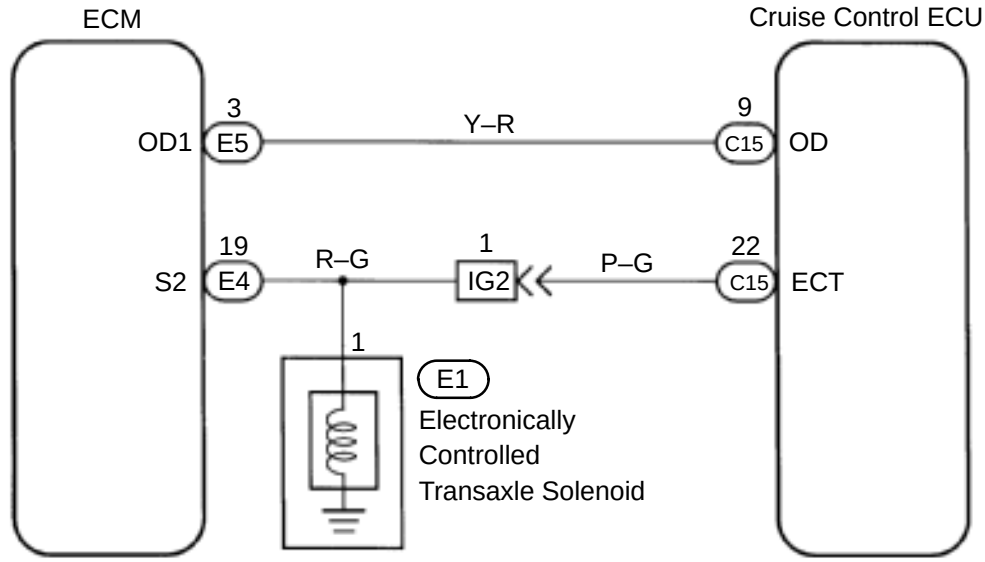

N12498

INSPECTION PROCEDURE

1	**Check operation of overdrive.**

PREPARATION:
Test drive after engine warm up.
CHECK:
Check that overdrive ON ↔ OFF occurs with operation of O/D switch ON–OFF.

NG → **Check and Repair Electronically controlled transmission (See page DI–124).**

OK

2	**Check voltage between terminal OD of harness side connector of ECU and body ground.**

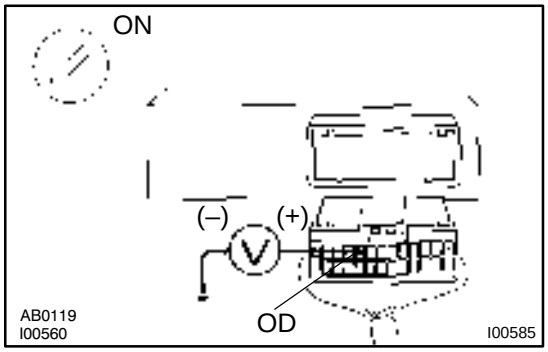

PREPARATION:
Remove ECU with connector still connected.
CHECK:
(a) Disconnect the ECU connector.
(b) Turn ignition switch ON.
(c) Measure voltage between terminal OD of harness side connector of ECU and body ground.

OK:
Voltage: 10 – 14 V

NG → **Go to step 5.**

OK

3	**Check voltage between terminal ECT of cruise control ECU connector and body ground (On test drive).**

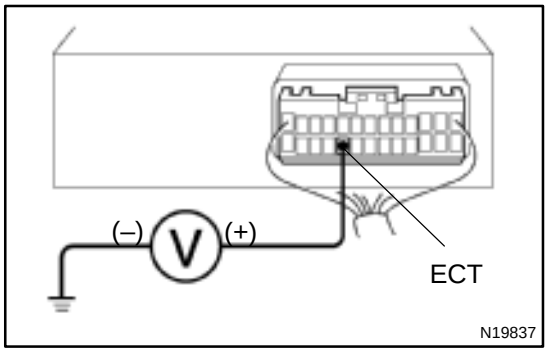

PREPARATION:

(a) Connect ECU connector.

(b) Test drive after engine warm up.

CHECK:

Check voltage between terminal ECT of cruise control ECU connector and body ground when OD switch is ON and OFF.

OK:

OD switch position	Voltage
ON	8 – 14 V
OFF	Below 0.5 V

OK → **Proceed to next circuit inspection shown on matrix chart (See page DI–308).**

NG

4	**Check for open and short in harness and connector between terminal ECT of cruise control ECU and electronically controlled transmission solenoid (See page IN–27).**

NG → **Repair or replace harness or connector.**

OK

Check and replace cruise control ECU.

5	**Check for open and short in harness and connector between terminal OD of ECU and terminal OD1 of ECM (See page IN–27).**

NG → **Repair or replace harness or connector.**

OK

Check and replace ECM (See page IN–27).

DI4R1–01

ECU Power Source Circuit

CIRCUIT DESCRIPTION

The ECU power source supplies power to the actuator and sensors, etc., When the terminal GND and the cruise control ECU case are grounded.

WIRING DIAGRAM

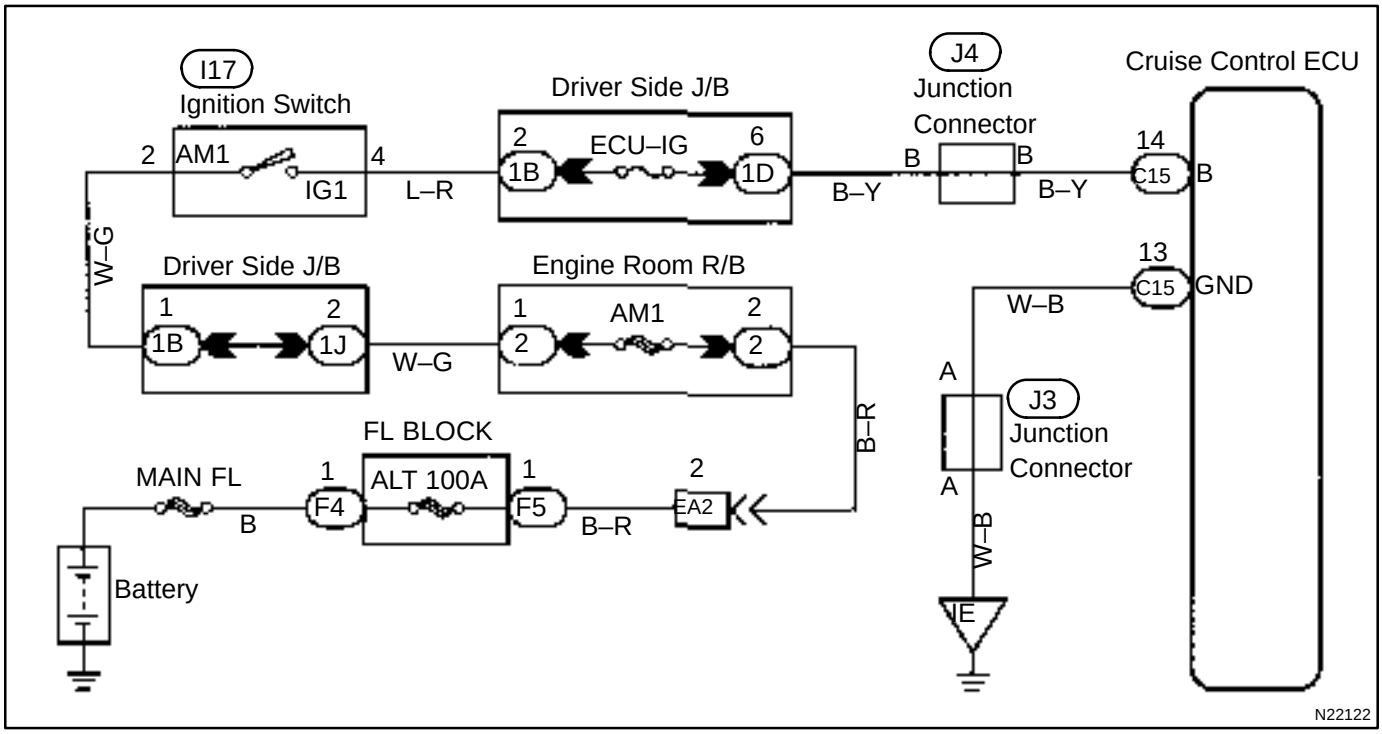

INSPECTION PROCEDURE

1	**Check ECU–IG fuse.**

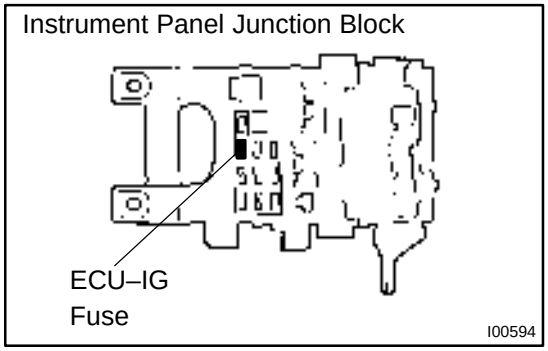

PREPARATION:

(a) Remove the fuse box opening cover.

(b) Remove ECU–IG fuse from instrument panel junction block.

CHECK:

Check continuity of ECU–IG fuse.

OK:

Continuity

NG	**Check for short in all the harness and components connected to the ECU–IG fuse.**

OK

2	Check voltage between terminals B and GND of ECU connector.

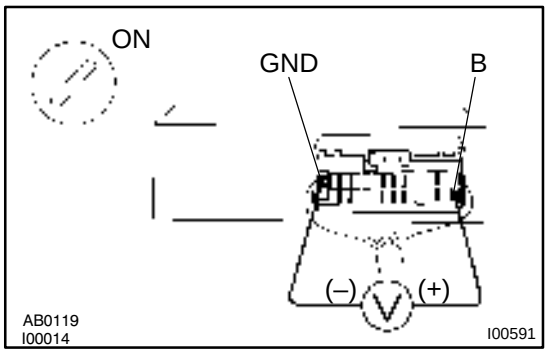

PREPARATION:
Remove ECU with connector is still connected.
CHECK:
(a) Turn ignition switch ON.
(b) Measure voltage between terminals B and GND of ECU connector.
OK:
Voltage 10 – 14 V

OK	Proceed to next circuit inspection shown on matrix chart (See page DI–308).

NG

3	Check resistance between terminals GND of ECU connector and body ground.

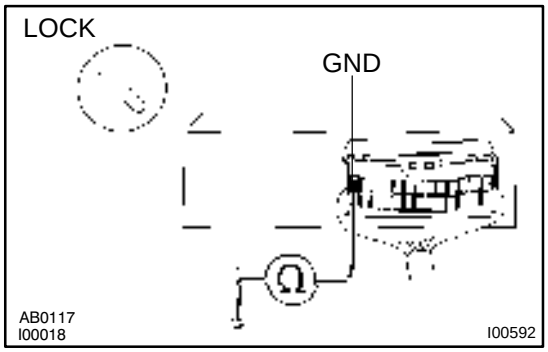

CHECK:
Measure resistance between terminal GND of cruise control ECU connector and body ground.
OK:
Resistance: Below 1 Ω

NG	Repair or replace harness or connector.

OK

Check and repair harness and connector between battery and ECU (See page IN–27).

DI4R4–01

CRUISE MAIN Indicator Light Circuit

CIRCUIT DESCRIPTION

When the cruise control main switch is turned ON, CRUISE MAIN indicator light lights up.

WIRING DIAGRAM

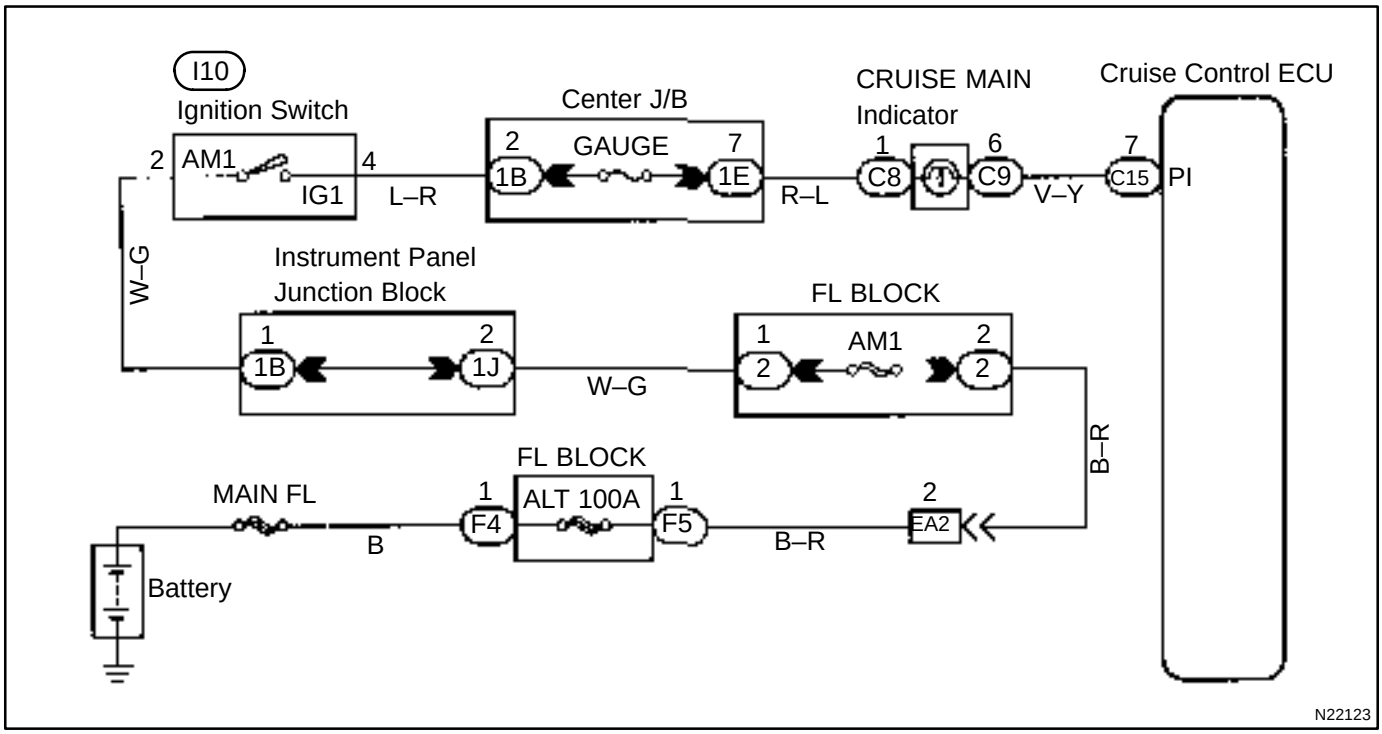

INSPECTION PROCEDURE

1	**Check voltage between terminals PI and GND of cruise control ECU connector.**

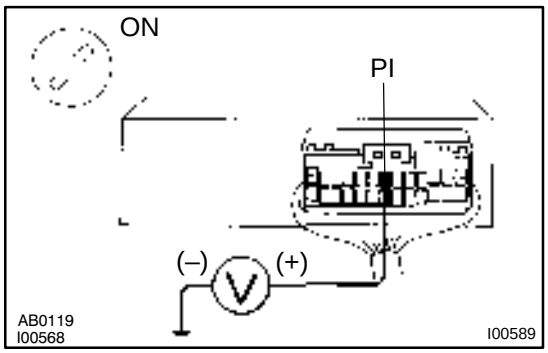

PREPARATION:

Ignition switch ON.

CHECK:

Measure voltage between terminals PI and GND of cruise control ECU connector when main switch on and off.

OK:

Switch position	Voltage
OFF	10 – 16 V
ON	Below 1.2 V

OK → **Proceed to next circuit inspection shown on matrix chart (See page DI–308).**

NG

2	Check combination meter. (See page BE–2)

NG → Replace combination meter.

OK

Check and replace cruise control ECU (See page IN–27).

DI4R3–01

Main Switch Circuit (Cruise Control Switch)

CIRCUIT DESCRIPTION

When the cruise control main switch is turned off, the cruise control does not operate.

WIRING DIAGRAM

See page DI–319.

INSPECTION PROCEDURE

1	**Check voltage between terminal CMS and GND of cruise control ECU connector.**

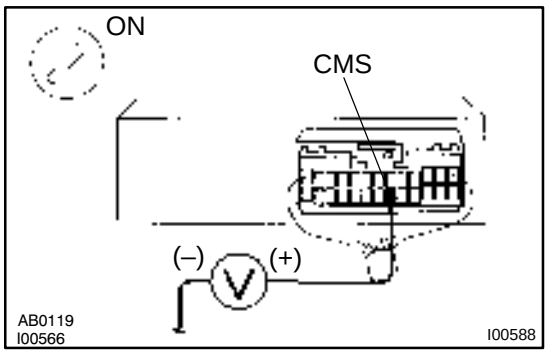

PREPARATION:

Remove cruise control ECU with connectors still connected.

CHECK:

(a) Turn ignition switch ON.

(b) Measure voltage between terminal CMS and GND of cruise control ECU connector when main switch is hold on and off.

OK:

Main switch	Voltage
OFF	10 – 14 V
ON	Below 1 V

OK → **Proceed to next circuit inspection shown on matrix chart (See page DI–308).**

NG

2	Check main switch.

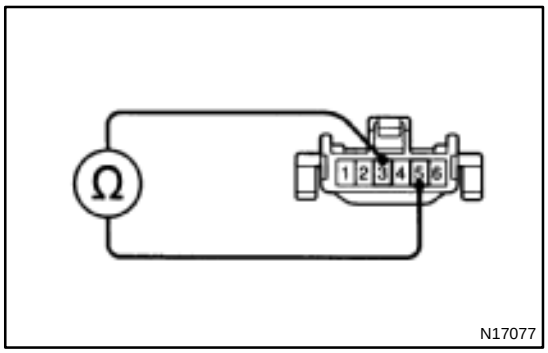

N17077

PREPARATION:

(a) Remove steering wheel center pad (See SR section).

(b) Disconnect cruise control switch connector.

CHECK:

Check continuity between terminals 3 and 5 of cruise control switch connector when main switch is held on and off.

OK:

Switch position	Tester connection	Specified condition
OFF	–	No continuity
Hold ON	3 – 5	Continuity

NG → **Replace control switch.**

OK ↓

3	Check harness and connector between cruise control ECU and main switch, main switch and body ground (See page IN–27).

NG → **Repair or replace harness or connector.**

OK ↓

Check and replace cruise control ECU (See page IN–27).

DI4QZ–01

Park/Neutral Position Switch Circuit

CIRCUIT DESCRIPTION

When the shift position is put in except D position, a signal is sent from the park/neutral position switch to the ECU. When this signal is input during cruise control driving, the ECU cancels the cruise control.

WIRING DIAGRAM

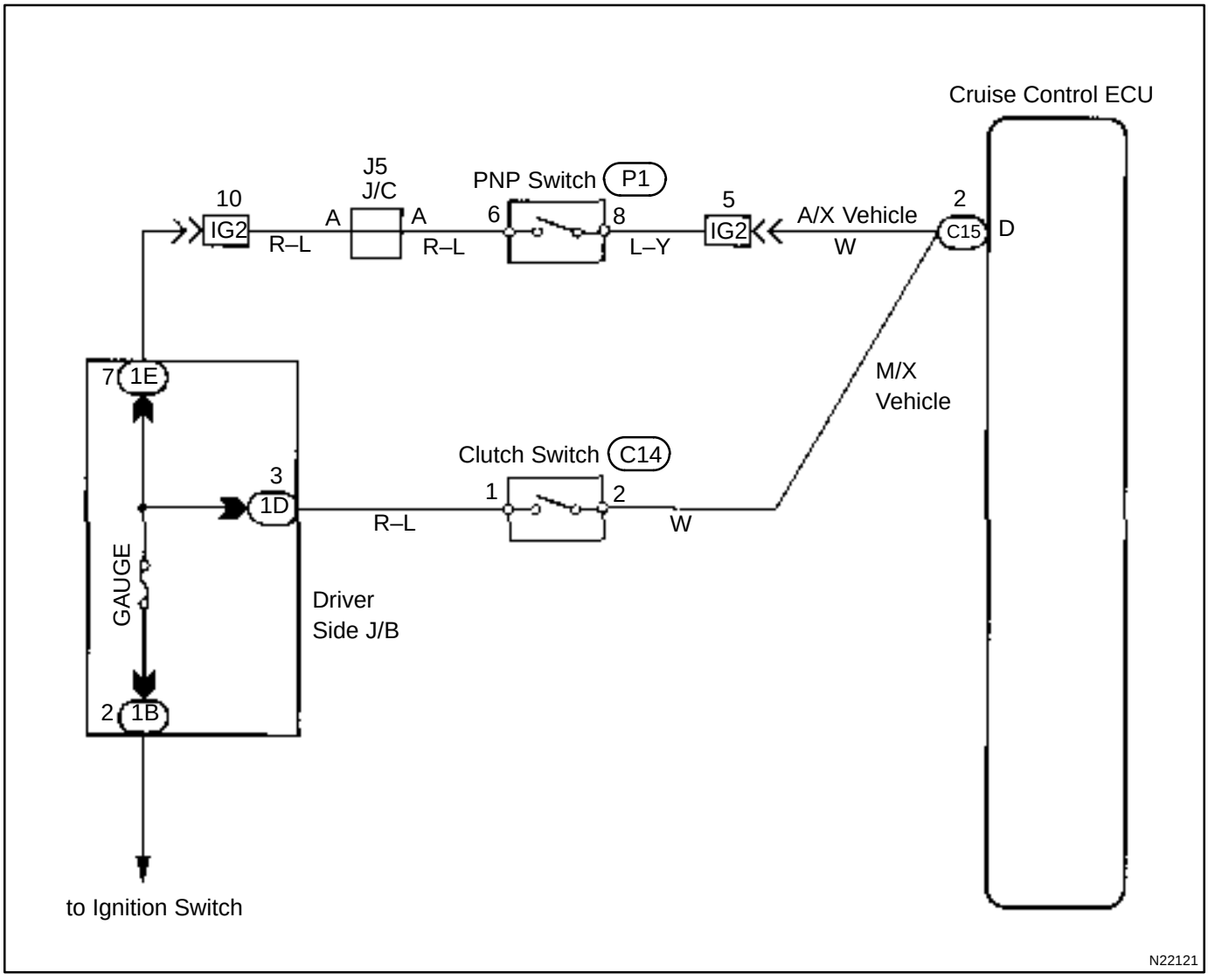

INSPECTION PROCEDURE

1	**Check starter operation.**

CHECK:

Check that the starter operates normally and that the engine starts.

NG → **Proceed to engine troubleshooting. (See page DI–1).**

OK ↓

2	**Input signal check.**

Input Signal	Indicator Light Blinking Pattern
Turn PNP switch OFF (Shift to except D position)	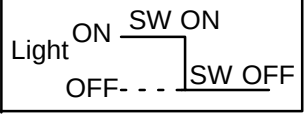

PREPARATION:

(a) See input signal check on page DI–301.

(b) Check the indicator light when shifting into except D position.

OK:

The indicator light goes off when shifting into except D position.

OK → **Proceed to next circuit inspection shown on matrix chart (See page DI–308).**

NG ↓

3	Check voltage between terminal D of ECU connector and body ground.

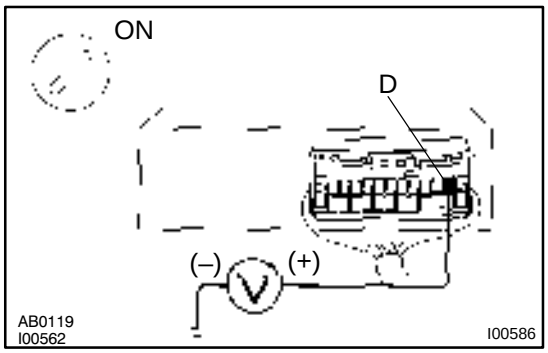

PREPARATION:

Remove ECU with connectors still connected.

CHECK:

(a) Turn ignition switch ON.

(b) Measure voltage between terminal D of ECU connector and body ground, when shifting into D position and other positions.

OK:

Shift Position	Voltage
D position	10 – 16 V
Other positions	Below 1 V

OK → **Proceed to next circuit inspection shown on matrix chart (See page DI–308).**

NG

4	Check for open in harness and connector between PNP Switch and ECU (See page IN–27).

NG → **Repair or replace harness or connector.**

OK

Check and replace ECU (See page IN–27).

DI4QX–01

DI–301 Stop Light Switch Circuit

CIRCUIT DESCRIPTION

When the brake is on, battery positive voltage normally applies through the stop fuse and stop switch to terminal STP– of the ECU, and the ECU turns the cruise control off.
A fail–safe function is provided so that cancel functions normally, even if there is a malfunction in the stop light signal circuit.
If the harness connected to terminal STP– has an open, terminal STP– will have battery positive voltage and the cruise control will be turned off, also SET not occurring.
Also, when the brake is on, the magnetic clutch is cut mechanically by the stop light switch, turning the cruise control off. (See page DI–312 for operation of the magnetic clutch)

WIRING DIAGRAM

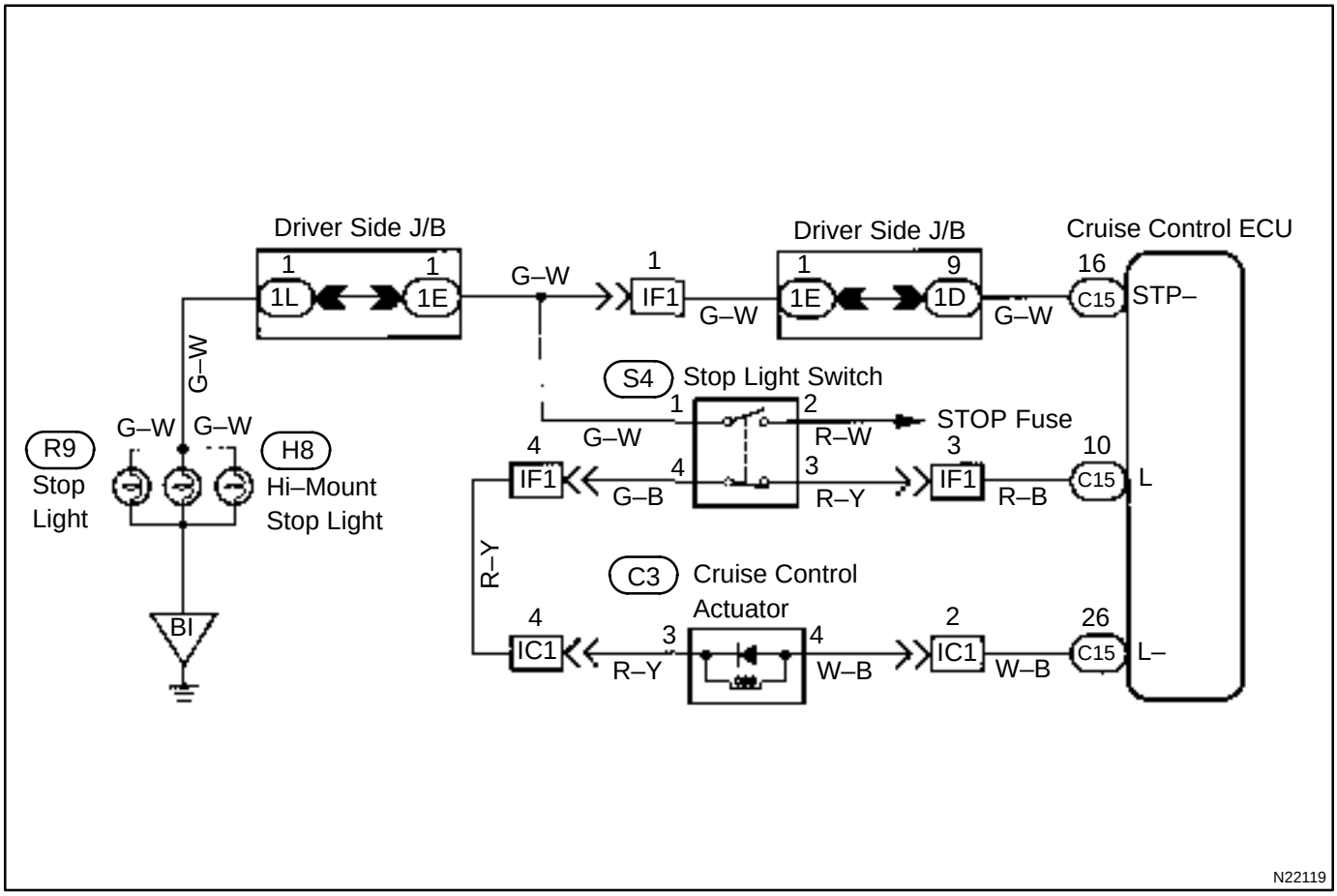

INSPECTION PROCEDURE

1	**Check operation of stop light.**

CHECK:

Check that stop light comes on when brake pedal is depressed, and turns off when brake pedal is released.

NG → **Check stop light circuit.**

OK

2	**Input signal check.**

Input Signal	Indicator Light Blinking Pattern
Stop Light switch ON	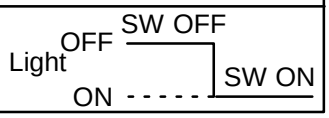

CHECK:

(a) See input signal check on page DI–301.

(b) Check the indicator light when the brake pedal is depressed.

OK:

The indicator light goes off when the brake pedal is depressed.

OK → **Proceed to next circuit inspection shown on matrix chart (See page DI–308).**

NG

3	Check voltage between terminal STP– of ECU connector and body ground.

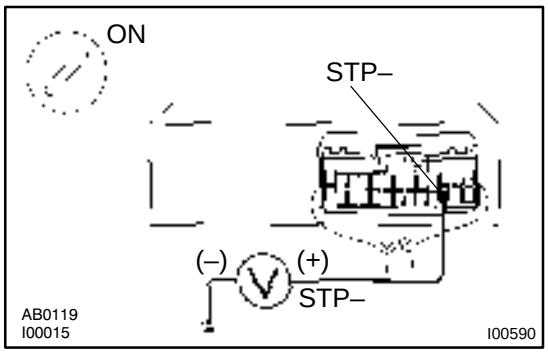

PREPARATION:

Remove ECU with connectors still connected.

CHECK:

(a) Turn ignition switch ON.

(b) Measure voltage between terminal STP– of ECU connector and body ground, when the brake pedal is depressed and released.

OK:

	STP–
Depressed	10 – 14 V
Released	Below 1 V

OK → **Proceed to next circuit inspection shown on matrix chart (See page DI–308).**

NG

4	Check for open in harness and connectors between terminal STP– of ECU and stop light switch (See page IN–27).

NG → **Repair or replace harness or connector.**

OK

Check and replace ECU (See page IN–27).

DI4QK–01

CUSTOMER PROBLEM ANALYSIS CHECK

CRUISE CONTROL SYSTEM Check Sheet

Inspector's name: _____

Customer's Name		**Registration No.**	
		Registration Year	
		Frame No.	
Date of Vehicle Brought in	/ /	**Odometer Reading**	**km** **Mile**

Date Problem First Occurred	/ /
How Often does Problem Occur ?	☑ Continuous ☑ Intermittent (Times a day)
Vehicle Speed when Problem Occurred	**km/h** **mph**

Symptoms	☑ Auto cancel occurs	● Driving condition ☐ City driving ☐ Free way ☐ Up hill ☐ Down hill ● After cancel occurred, did the driver activate cruise control again? ☐ Yes ☐ No
	☐ Cancel does not occur	☐ With brake ON ☐ Except D position shift ☐ At 40 km/h (25 mph) or less ☐ When control SW turns to CANCEL position
	☐ Cruise control malfunction	☐ Slip to acceleration side ☐ Slip to deceleration side ☐ Hunting occurs ☐ O/D cut off does not occur ☐ O/D does not return
	☐ Switch malfunction	☐ SET ☐ ACCEL ☐ COAST ☐ RESUME ☐ CANCEL
	☐ Faulty CRUISE MAIN indicator light	☐ Remains ON ☐ Does not light up ☐ Blinking

DTC Check	**1st Time**	☐ Normal Code ☐ Malfunction Code (Code)
	2nd Time	☐ Normal Code ☐ Malfunction Code (Code)

DI4QM–01

DIAGNOSTIC TROUBLE CODE CHART

If a malfunction code is displayed during the diagnostic code check, check the circuit listed for that code in the table below (Proceed to the page given for that circuit).

DTC No. (See Page)	Detection Item	Trouble Area
11, 15 (DI–310)	• Short in actuator motor circuit • Open in actuator motor circuit	• Cruise control actuator • Harness or connector between actuator and cruise control ECU • Cruise control ECU
12 (DI–312)	• Short in magnetic clutch circuit • Open (0.8 sec.) in magnetic clutch circuit	• Cruise control actuator magnetic clutch • Harness or connector between ECU and magnetic clutch, magnetic clutch and body ground • Cruise control ECU
14 (DI–314)	• Actuator mechanical malfunction	• Cruise control actuator • Harness or connector between actuator and cruise control ECU • Cruise control ECU
21 (DI–316)	• Speed signal is not input to the cruise control ECU while cruise control is set	• Vehicle speed sensor • Combination meter • Harness or connector between vehicle speed sensor and combination meter, combination meter • Cruise control ECU
23 (DI–318)	• Actual vehicle Speed has dropped either by 16 km/h (10 mph) or more below the set speed, or by 20 % or more of the set speed • Vehicle speed sensor pulse is abnormal. (When speed signal is not input to the ECU below 0.2 sec., code will be displayed.)	• Vehicle speed sensor • Harness or connector in SPD circuit • Cruise control ECU
32 (DI–319)	• Short in control switch circuit	• Cruise control switch • Harness or connector between control switch and cruise control ECU • Cruise control ECU
41	• Cruise control ECU	• Cruise control ECU
42	• Source voltage drop	• Power source
51 (DI–322)	• Short in idle signal circuit	• Throttle position sensor • Harness or connector between cruise control ECU and throttle position sensor • Cruise control ECU

CRUISE CONTROL SYSTEM

DI4QJ–01

HOW TO PROCEED WITH TROUBLESHOOTING

Perform troubleshooting in accordance with the procedure on the following page.

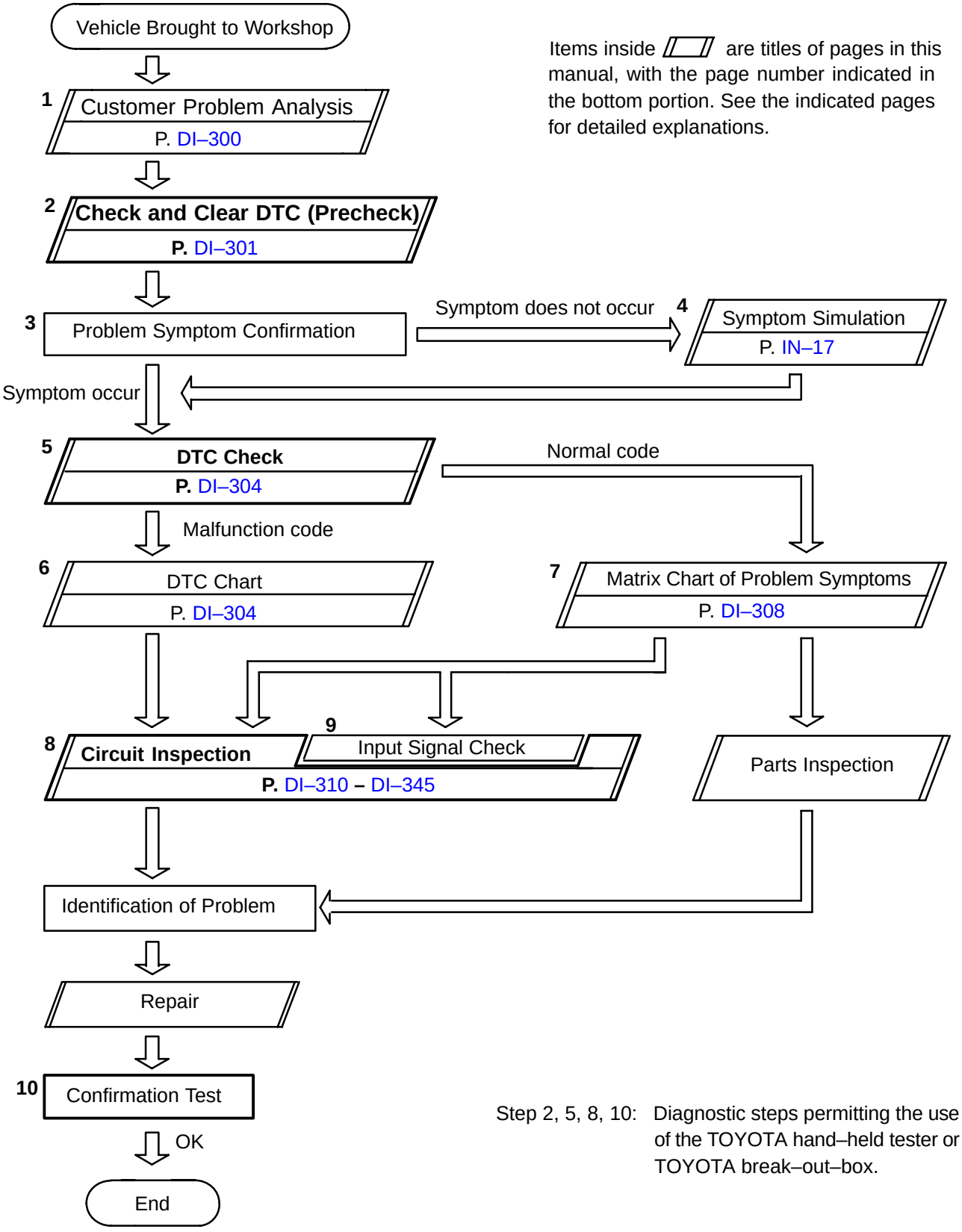

Items inside ▱ are titles of pages in this manual, with the page number indicated in the bottom portion. See the indicated pages for detailed explanations.

Step 2, 5, 8, 10: Diagnostic steps permitting the use of the TOYOTA hand–held tester or TOYOTA break–out–box.

DI4QN–01

PARTS LOCATION

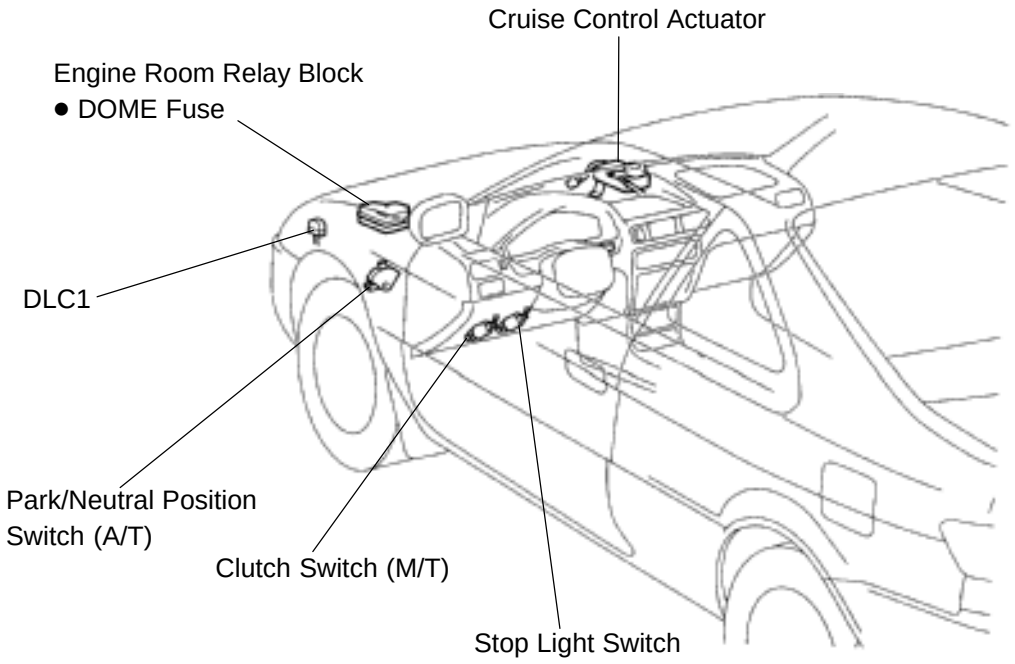

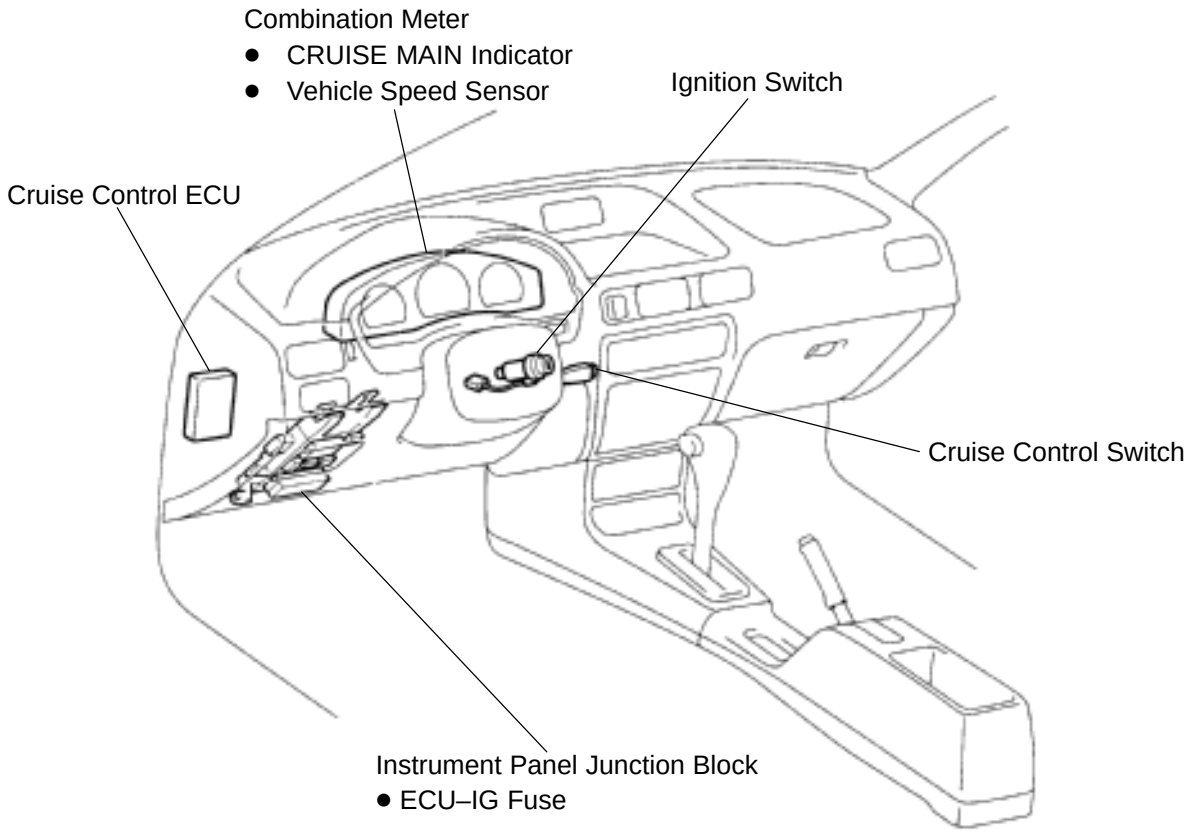

I00552
I00553

I00583

DI4QL–01

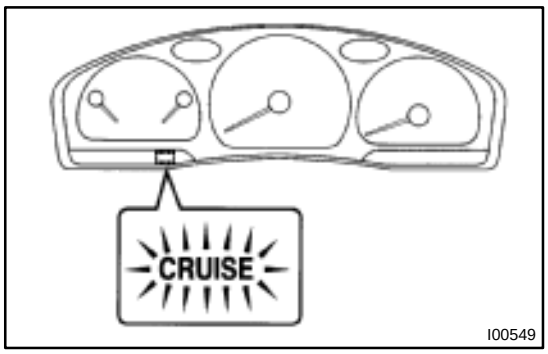

PRE–CHECK

1. DIAGNOSIS SYSTEM

(a) Check the indicator.

(1) Turn the ignition switch to ON.

(2) Check that the CRUISE MAIN indicator light comes on when the cruise control main switch is turned ON, and that the indicator light goes off when the main switch is turned OFF.

HINT:

If the indicator check result is not normal, proceed to trouble-shooting (See page BE–2) for the combination meter section.

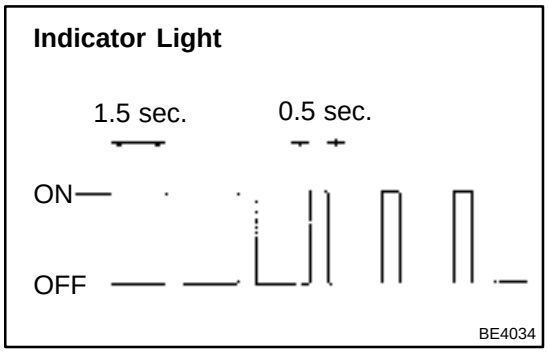

(b) Check the DTC.

HINT:

If a malfunction occurs in the vehicle speed sensors or actuator, etc. during cruise control driving, the ECU actuates AUTO CANCEL of the cruise control and blinks the CRUISE MAIN indicator light to inform the driver of a malfunction. At the same time, the malfunction is stored in memory as a DTC.

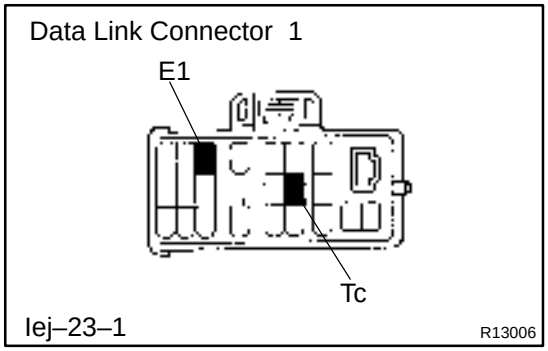

(c) Using diagnosis check wire, check the output of DTC.

(1) Turn the ignition switch to ON.

(2) Using SST, connect terminals Tc and E_1 of DLC1.

SST 09843–18020

(3) Read the DTC on the CRUISE MAIN indicator light.

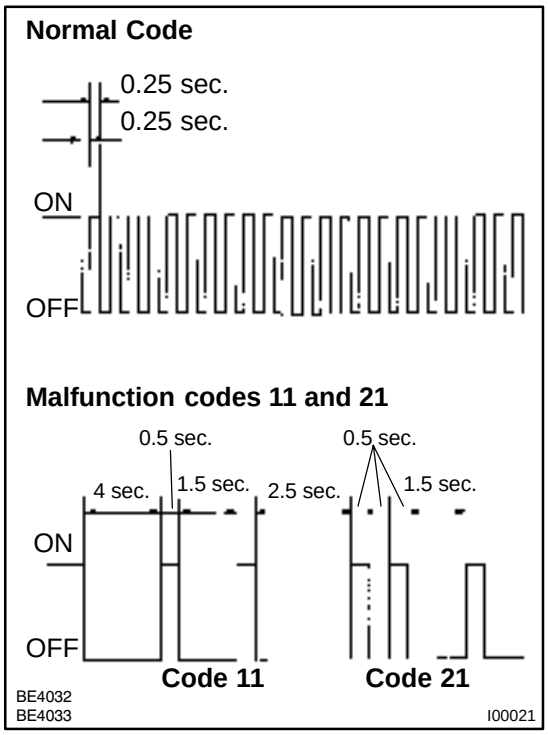

HINT:
If the DTC is not output, inspect the diagnosis circuit (See page DI–304).
As an example, the blinking patterns for codes; normal, 11 and 21 are shown in the illustration.

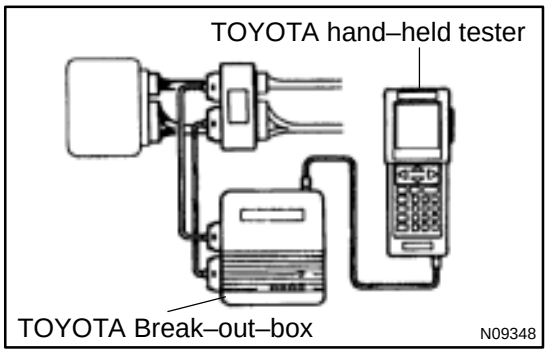

2. ECU TERMINAL VALUES MEASUREMENT USING TOYOTA BREAK–OUT–BOX AND TOYOTA HAND–HELD TESTER

(a) Hook up the TOYOTA break–out–box and TOYOTA hand–held tester to the vehicle.

(b) Read the ECU input/output values by following the prompts on the hand–held tester screen.

HINT:
TOYOTA hand–held tester has a ”Snapshot” function. This records the measured values and is effective in the diagnosis of intermittent problems.
Please refer to the TOYOTA hand–held tester/TOYOTA break–out–box operator’s manual for further details.

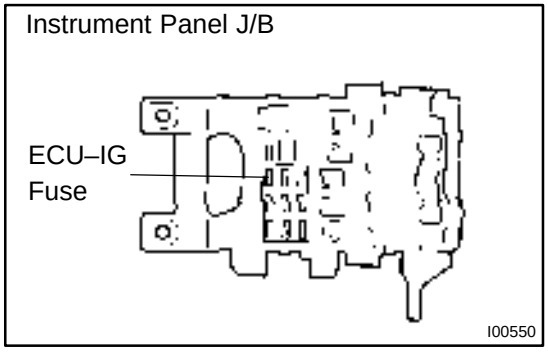

3. DTC CLEARANCE

(a) After completing repairs the DTC retained in memory can be cleared by removing the ECU–IG fuse for 10 seconds or more, with the ignition switch off.

(b) Check that the normal code is displayed after connecting the fuse.

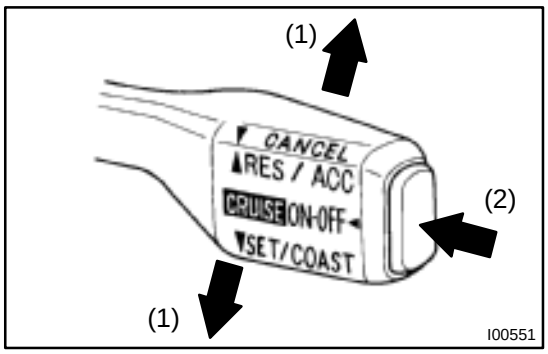

4. INPUT SIGNAL CHECK

Output of Code

(1) For check No.1 – No.2
- Turn ignition switch ON.

(2) For check No.3
- Turn the ignition switch ON.
- Shift to D position.

(3) For check No.4
- Jack up the vehicle.
- Start the engine.
- Shift to D position.

(a) Press the control switch to SET/COAST or RES/ACC position and hold it down or hold it up (1).

(b) Push the main switch on (2).

(c) Check that the CRUISE MAIN indicator light blinks twice or 3 times repeatedly after 3 seconds.

(d) Turn the SET/COAST or RES/ACC switch off.

(e) Operate each switch as listed in the table below.

(f) Read the blinking pattern of the CRUISE MAIN indicator light.

(g) After performing the check, turn the main switch off.

HINT:

When 2 or more signals are input to the ECU, only the lowest numbered code is displayed.

No.	Operation Method	CRUISE MAIN Indicator Light Blinking Pattern	Diagnosis
1	Turn SET/COAST switch ON	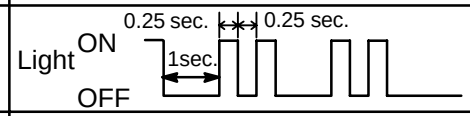	SET/COAST switch circuit is normal
2	Turn RES/ACC switch ON		RES/ACC switch circuit is normal
3	Turn CANCEL switch ON	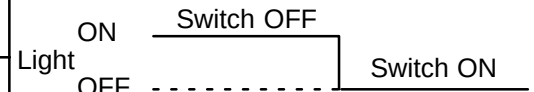	CANCEL switch circuit is normal
	Turn stop light switch ON (Depress brake pedal)		Stop light switch circuit is normal
	Turn PNP switch OFF (Shift to except D position)	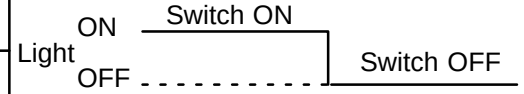	PNP switch circuit is normal
	Turn clutch switch OFF (Depress clutch pedal)		Clutch switch circuit is normal
4	Drive at 40 km/h (25 mph) or higher		Speed Sensor is normal
	Drive at 40 km/h (25 mph) or below	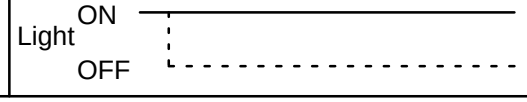	

DI4QP–01

PROBLEM SYMPTOMS TABLE

If a normal code is display ed during the DTC check but the trouble still occurs (reappears), perform trouble-shooting for each problem symptom, checking the circuit for each symptom in the order given in the table below. Proceed to the page located for each circuit.

HINT:

- If the instruction ”Proceed to next circuit inspection shown on matrix chart” is given in the flow chart for each circuit. Proceed to the circuit with the next number in the table to continue the check.
- If the trouble still reappears even through there are no abnormalities in any of the other circuits, then check or replace the cruise control ECU as the last step.

Symptom	Suspect Area	See page
SET not occurring or CANCEL occurring. (DTC is Normal)	1. Main Switch Circuit (Cruise control switch) 2. Vehicle Speed Signal Abnormal 3. Control Switch Circuit (Cruise control switch) 4. Stop Light Switch Circuit 5. Park/Neutral Position Switch Circuit 6. Actuator Motor Circuit 7. Cruise Control ECU	 DI–339 DI–318 DI–319 DI–324 DI–330 DI–310 IN–27
SET not occurring or CANCEL occurring. (DTC dose not output)	1. ECU Power Source Circuit 2. Cruise Control ECU	DI–335 IN–27
Actual vehicle speed deviates above or below the set speed.	1. Vehicle Speed Signal Abnormal 2. Electronically Controlled Transmission Communication Circuit 3. Actuator Motor Circuit 4. Idle Signal Circuit (Main Throttle Position Sensor) 5. Cruise Control ECU	DI–318 DI–327 DI–310 DI–322 IN–27
Gear shifting frequent between 3rd O/D when driving on uphill road. (Hurting)	1. Electronically Controlled Transmission Communication Circuit 2. Cruise Control ECU	 DI–327 IN–27
Cruise control not cancelled, even when brake pedal is de-pressed.	1. Stop Light Switch Circuit 2. Actuator Motor Circuit 3. Cruise Control ECU	DI–324 DI–310 IN–27
Cruise control not cancelled, even when transmission is shifted to ”N” position.	1. Park/Neutral Position Switch Circuit 2. Actuator Motor Circuit 3. Cruise Control ECU	DI–330 DI–310 IN–27
Cruise control not cancelled, even when clutch pedal is de-pressed.	1. Clutch Switch Circuit 2. Actuator Motor Circuit 3. Cruise Control ECU	DI–333 DI–310 IN–27
Control switch does not operate. (SET/COAST, ACC/RES, CANCEL not possible)	1. Control Switch Circuit (Cruise Control Switch) 2. Actuator Motor Circuit 3. Cruise Control ECU	 DI–319 DI–310 IN–27
SET possible at 40 km/h (25 mph) or less, or CANCEL does not operate at 40 km/h (25 mph) or less.	1. Vehicle Speed Signal Abnormal 2. Actuator Motor Circuit 3. Cruise Control ECU	DI–318 DI–310 IN–27
Poor response is ACCEL and RESUME modes.	1. Electronically Controlled Transmission Communication Circuit 2. Actuator Motor Circuit 3. Cruise Control ECU	 DI–327 DI–310 IN–27

O/D does not RESUME, even though the road is not uphill.	1. Electronically Controlled Transmission Communication Circuit 2. Cruise Control ECU	DI–327 IN–27
DTC memory is erased.	1. Back–up Power Source Circuit 2. Cruise Control ECU	DI–337 IN–27
DTC is not output, or is output when is should not be.	1. Diagnosis Circuit 2. Cruise Control ECU	DI–343 IN–27
Cruise MAIN indicator light remains ON or fall to light up.	1. CRUISE MAIN Indicator Light Switch Circuit	DI–341

DI4QO–01

TERMINALS OF ECM

C15

Cruise Control ECU

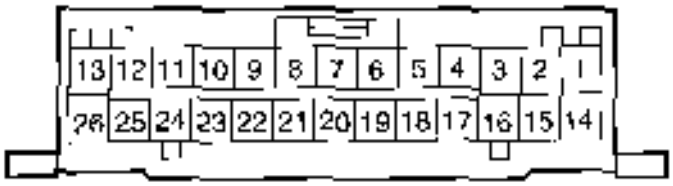

I00554

Symbols (Terminals No.)	Wiring Color	Condition	STD Voltage (V)
D ↔ GND (2 ↔ 13)	W ↔ W–B	Shift to except D position. (A/T) Depress clutch pedal. (M/T)	Below 1 V
		IG ON. Shift into D position. (A/T) IG ON. Release clutch pedal. (M/T)	10 – 16 V
PI ↔ GND (7 ↔ 13)	V–Y ↔ W–B	IG ON. Main switch ON. Main indicator light ON.	Below 1.2 V
		IG ON. Main switch OFF. Main indicator light OFF.	10 – 16 V
TC ↔ GND (8 ↔ 13)	Y–B ↔ W–B	Ignition switch ON.	10 – 16 V
		Ignition switch ON. Connect terminal TC and E1 of DLC1.	Below 1 V
OD ↔ GND (9 ↔ 13)	Y–R ↔ W–B	During cruise control driving. OD switch ON.	10 – 16 V
		During cruise control driving. OD switch OFF. (3rd driving)	Below 1 V
L ↔ GND (10 ↔ 13)	R–B ↔ W–B	During cruise control driving.	9 – 15 V
		Except during cruise control driving.	Below 1 V
MC ↔ GND (11 ↔ 13)	R ↔ W–B	During cruise control driving. COAST switch hold ON.	9 – 15 V
		During cruise control driving. ACC switch hold ON.	Below 1 V
MO ↔ GND (12 ↔ 13)	R–W ↔ W–B	During cruise control driving. ACC switch hold ON.	9 – 15 V
		During cruise control driving. COAST switch hold ON.	Below 1 V
GND ↔ Body Ground (13 ↔ Body Ground)	W–B ↔ Ground	Constant.	Below 1 V
B ↔ GND (14 ↔ 13)	B–Y ↔ W–B	Ignition switch ON.	10 – 16 V
BATT ↔ GND (15 ↔ 13)	L–Y ↔ W–B	Constant.	10 – 16 V
STP– ↔ GND (16 ↔ 13)	G–W ↔ W–B	Depress brake pedal.	10 – 16 V
		Release brake pedal.	Below 1 V

CCS ↔ GND (18 ↔ 13)	G–B ↔ W–B	Ignition switch ON.	10 – 16 V
		Ignition switch ON. CANCEL switch hold ON.	5.1 – 8.3 V
		Ignition switch ON. SET/COAST switch hold ON.	2.4 – 4.0 V
		Ignition switch ON. RES/ACC switch hold ON.	0.8 – 1.4 V
CMS ↔ GND (19 ↔ 13)	L ↔ W–B	Ignition switch ON. Main switch ON.	Below 1 V
		Ignition switch ON. Main switch OFF.	10 – 16 V
SPD ↔ GND (20 ↔ 13)	Y ↔ W–B	Ignition switch ON.	10 – 16 V
		During driving.	3 – 7 V
IDL ↔ GND (21↔ 13)	GR–L ↔ W–B	Ignition switch ON. Throttle valve fully closed.	Below 1 V
		Ignition switch ON. Throttle valve fully opened.	10 – 16 V
ECT ↔ GND (22 ↔ 13)	P–B ↔ W–B	During driving. Gear position O/D.	Below 1 V
		During driving. Gear position 3rd.	10 – 16 V
L– ↔ GND (26 ↔ 13)	W–B ↔ W–B	Constant.	Below 1 V

DI4OJ–01

A/C Cut Control Circuit

CIRCUIT DESCRIPTION

This circuit cuts air conditioning operation during vehicle acceleration is order to increase acceleration performance. During acceleration with the vehicle speed at 25 km/h (16 mph) or less, engine speed at 1,200 rpm or less and throttle valve opening angle 50˚ or more, the A/C magnet switch is turned OFF for several seconds.

WIRING DIAGRAM

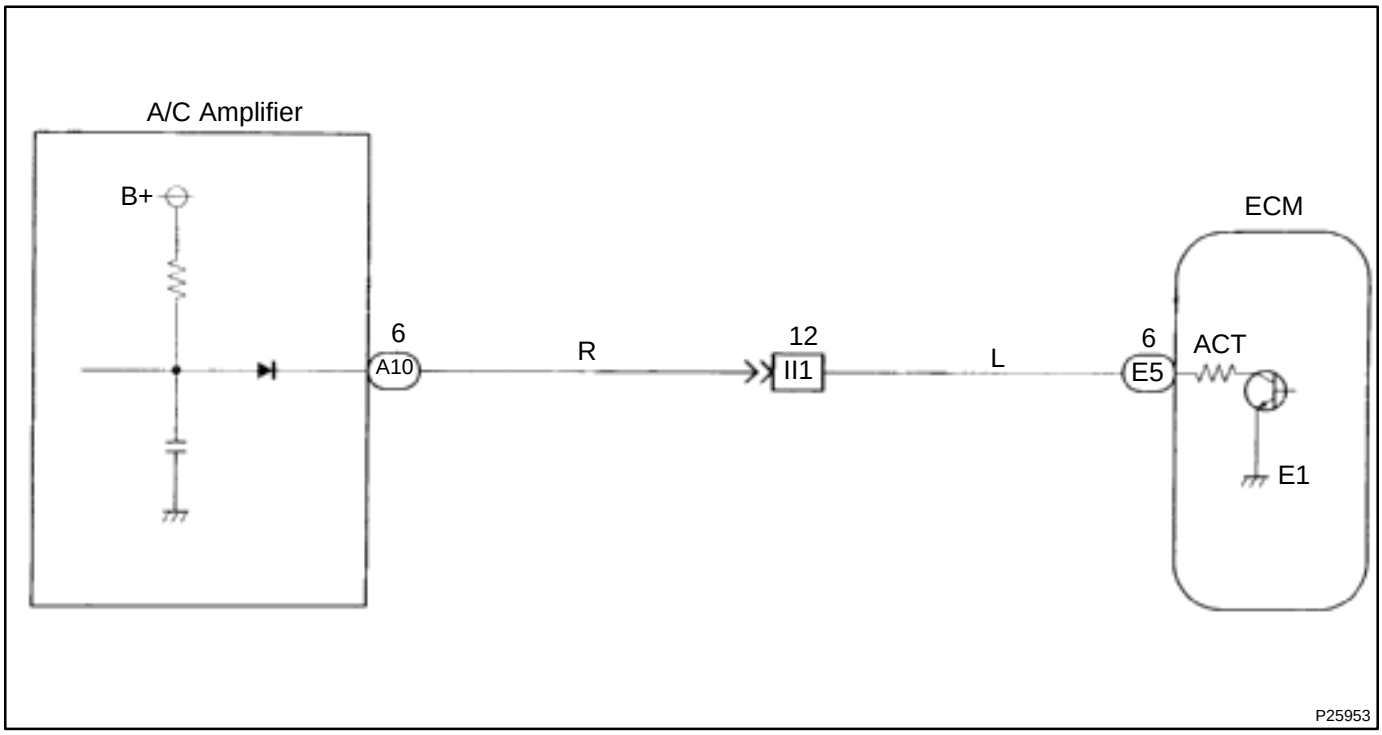

INSPECTION PROCEDURE
TOYOTA hand –held tester

1	**Connect TOYOTA hand–held tester and check operation of air conditioning cut control.**

PREPARATION:

(a) Remove the fuse cover on the instrument panel.
(b) Connect the TOYOTA hand–held tester to the DLC3.
(c) Turn ignition switch ON and TOYOTA hand–held tester main switch ON.
(d) Start the engine and air conditioning switch ON.

HINT:

A/C magnetic clutch is turned ON.

(e) Select the ACTIVE TEST mode on the TOYOTA hand–held tester.

CHECK:

Check operation of A/C magnetic clutch cut when air conditioning cut control is operated by the TOYOTA hand–held tester.

OK:

A/C magnetic clutch is turned OFF.

OK → **Proceed to next circuit inspection shown on matrix chart (See page DI–20).**

NG

2	**Check for open and short in harness and connector between ECM and A/C amplifier (See page IN–27).**

NG → **Repair or replace harness or connector.**

OK

3	**Check voltage between terminal ACT of ECM connector and body ground.**

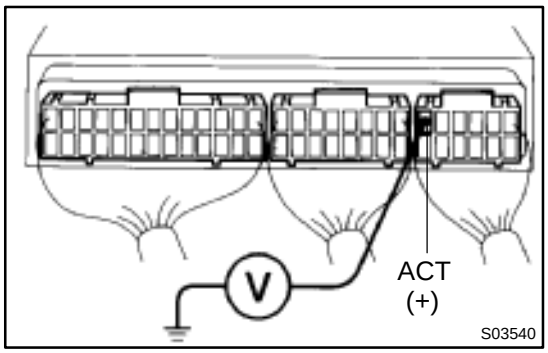

PREPARATION:

(a) Remove the lower finish panel.

(b) Start the engine.

CHECK:

Measure voltage between terminal ACT of ECM connector and body ground when A/C switch is turned to ON and OFF.

OK:

A/C switch condition	Voltage
ON	9 – 14 V
OFF	Below 2.0 V

NG → **Check and replace A/C amplifier.**

OK →

Check and replace ECM (See page IN–27).

OBD II scan tool (excluding TOYOTA hand –held tester)

1	**Check voltage between terminal ACT of ECM connector and body ground (See page DI–121, step 3).**

OK → **Check and replace ECM (See page IN–27).**

OK →

2	**Check for open and short in harness and connector between ECM and A/C amplifier (See page IN–27).**

NG → **Repair or replace harness or connector.**

OK →

Check and replace A/C amplifier.

DI4OH–01

ECM Power Source Circuit

CIRCUIT DESCRIPTION

When the ignition switch is turned ON, battery positive voltage is applied to the coil, closing the contacts of the EFI main relay and supplying power to the terminal +B of the ECM.

WIRING DIAGRAM

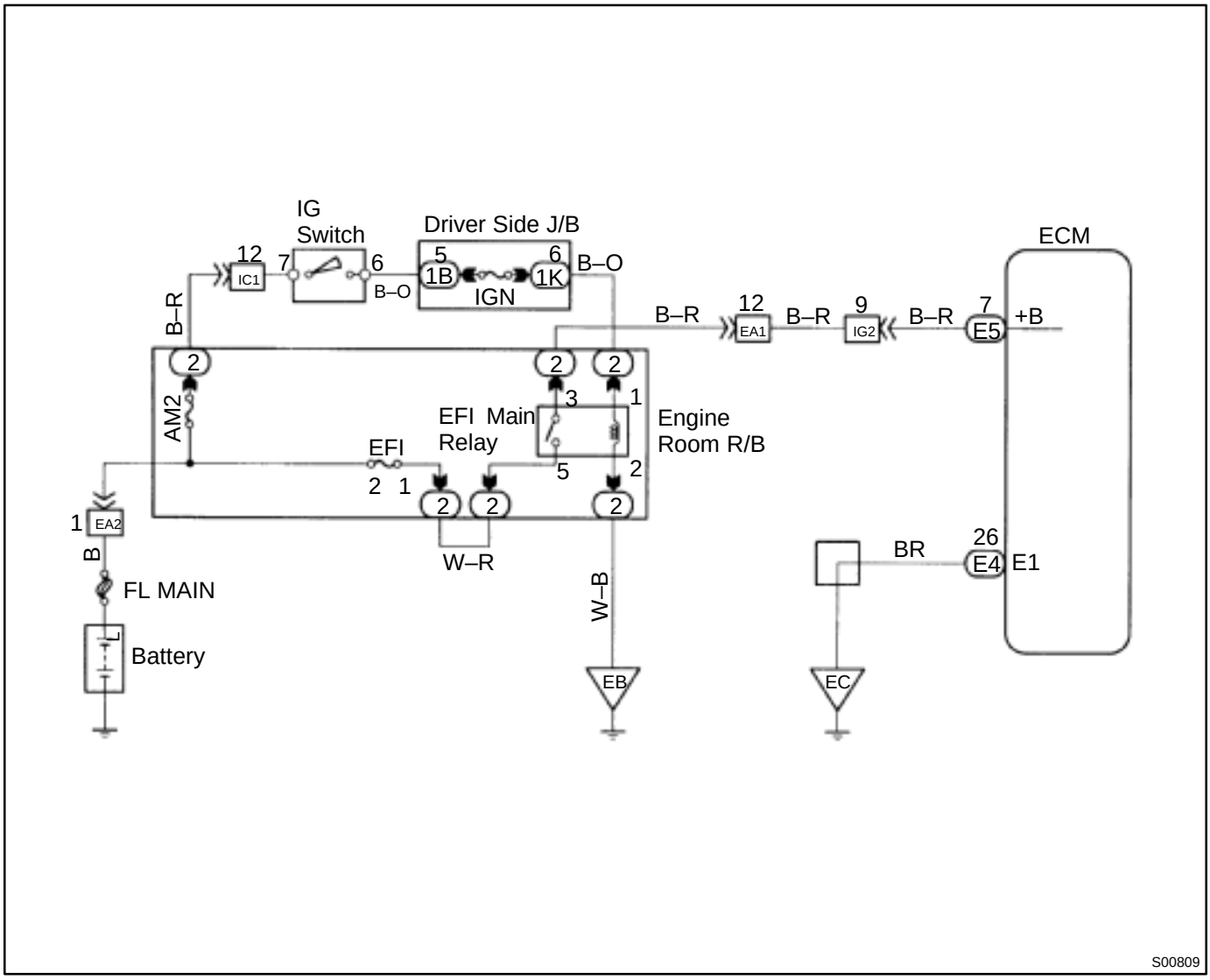

INSPECTION PROCEDURE

1	**Check voltage between terminals +B and E1 of ECM connector.**

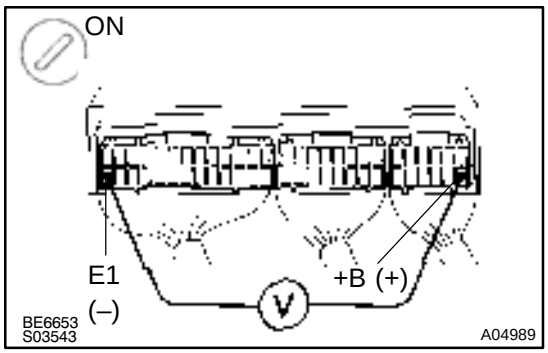

PREPARATION:

(a) Remove the lower finish panel.

(b) Turn ignition switch ON.

CHECK:

Measure voltage between terminals +B and E1 of ECM connectors.

OK:

Voltage: 9 – 14 V

OK → **Proceed to next circuit inspection shown on matrix chart (See page DI–20).**

NG

2	**Check for open in harness and connector between terminal E1 of ECM and body ground (See page IN–27).**

NG → **Repair or replace harness or connector.**

OK

3	**Check EFI main relay (Marking: EFI) (See page SF–36).**

NG → **Replace EFI main relay.**

OK

4	**Check EFI fuse (See page DI–106, step 2).**

NG → **Check for short in all the harness and components connected to EFI fuse.**

OK

5	Check for open in harness and connector between EFI main relay (Marking: EFI) and battery, EFI main relay (Marking: EFI) and ECM (See page IN–27).

NG → Repair or replace harness or connector.

OK

6	Check IGN fuse of driver side J/B.

NG → Check for short in all the harness and components connected to IGN fuse.

OK

7	Check ignition switch (See page BE–11).

NG → Replace ignition switch.

OK

Check for open in harness and connector between IG switch and EFI main relay, EFI main relay and body ground (See page IN–27).

Fuel Pump Control Circuit

CIRCUIT DESCRIPTION

In the diagram below, when the engine is cranked, current flows from terminal ST of the ignition switch to the starter relay coil and also current flows to terminal STA of ECM (STA signal).
When the STA signal and NE signal are input to the ECM, Tr is turned ON, current flows to coil of the circuit opening relay, the relay switches on, power is supplied to the fuel pump and the fuel pump operates.
While the NE signal is generated (engine running), the ECM keeps Tr ON (circuit opening relay ON) and the fuel pump also keeps operating.

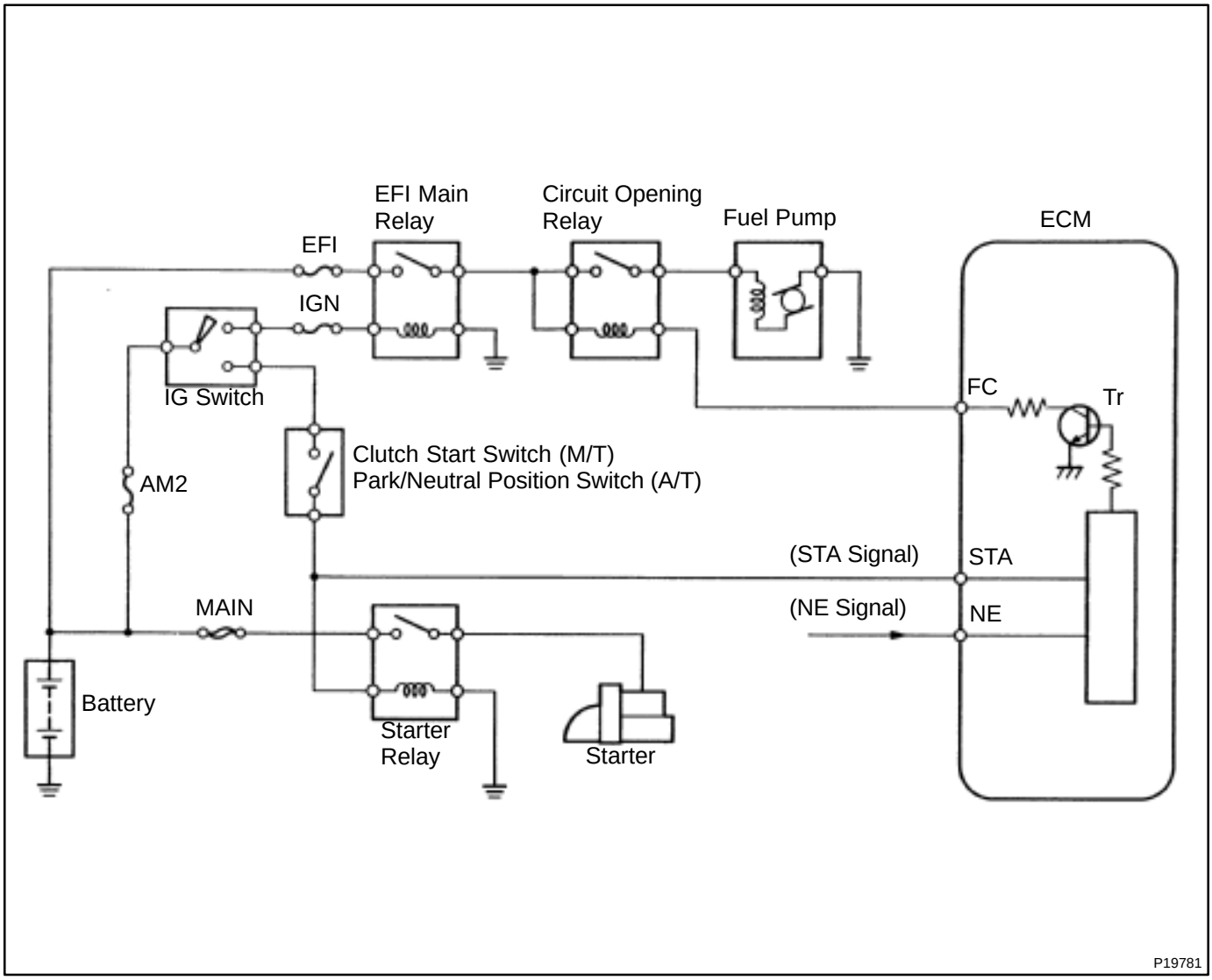

WIRING DIAGRAM

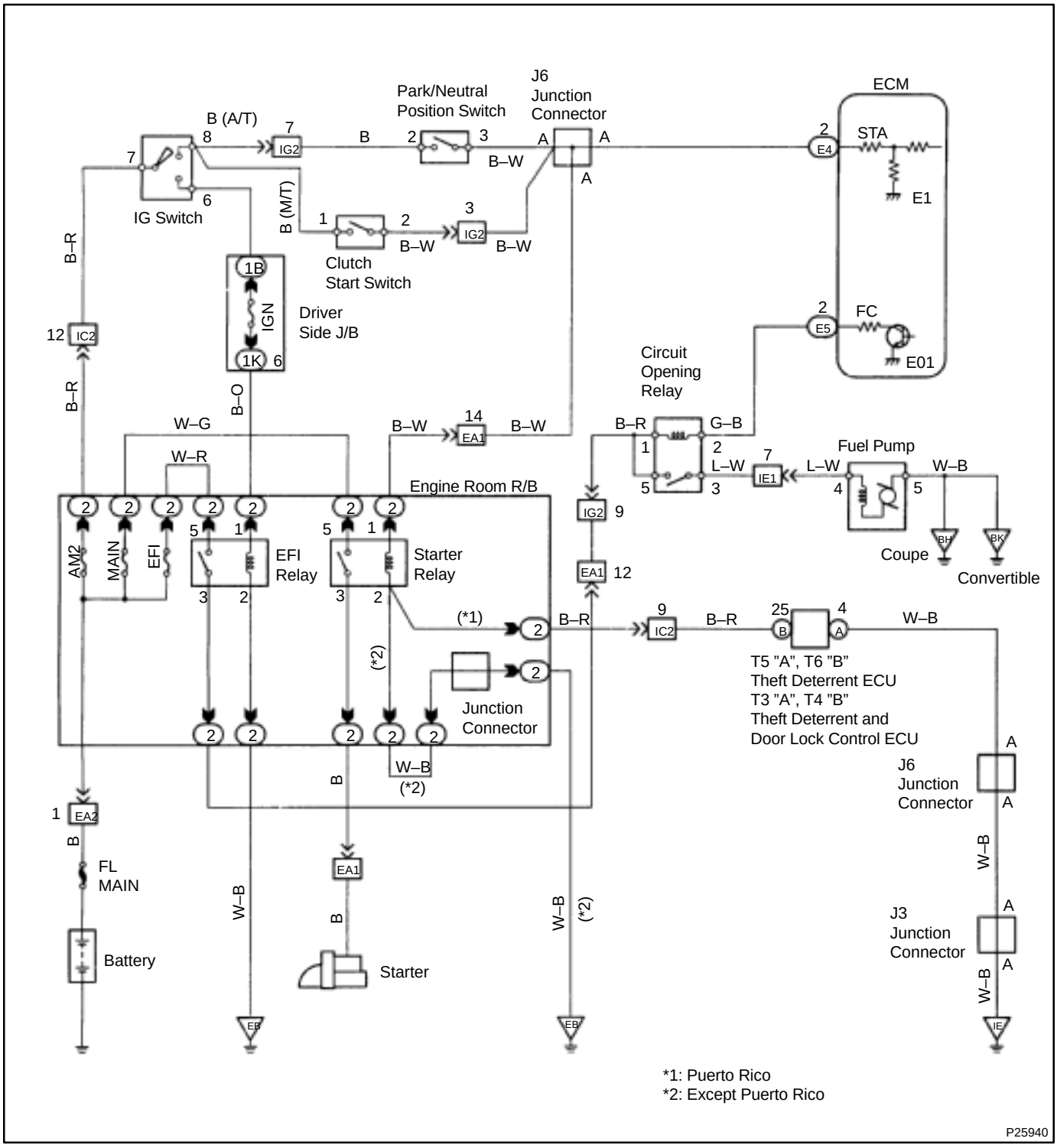

INSPECTION PROCEDURE
TOYOTA hand–held tester:

1	Connect the TOYOTA hand–held tester and check operation of fuel pump (See page SF–1).

OK → Check for starter signal circuit (See page DI–109).

NG

2	Check for ECM power source circuit (See page DI–112).

NG → Repair or replace.

OK

3	Check circuit opening relay (See page SF–38).

NG → Replace circuit opening relay.

OK

4	**Check voltage between terminal FC of ECM connector and body ground.**

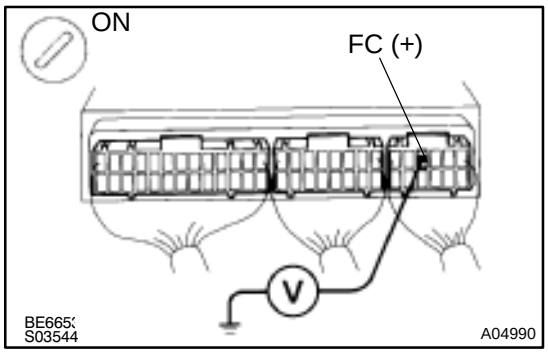

PREPARATION:

(a) Remove the lower finish panel.

(b) Turn ignition switch ON.

CHECK:

Measure voltage between terminal FC of ECM connector and body ground.

OK:

Voltage: 9 – 14 V

NG → **Check for open in harness and connector between EFI main relay and circuit opening relay, circuit opening relay and ECM.**

OK

5	**Check fuel pump (See page SF–1).**

NG → **Repair or replace fuel pump.**

OK

6	**Check for open in harness and connector between circuit opening relay and fuel pump, fuel pump and body ground (See page IN–27).**

NG → **Repair or replace harness or connector.**

OK

Check and replace ECM (See page IN–27).

OBD II scan tool (excluding TOYOTA hand–held tester)

1	**Check operation of fuel pump.**

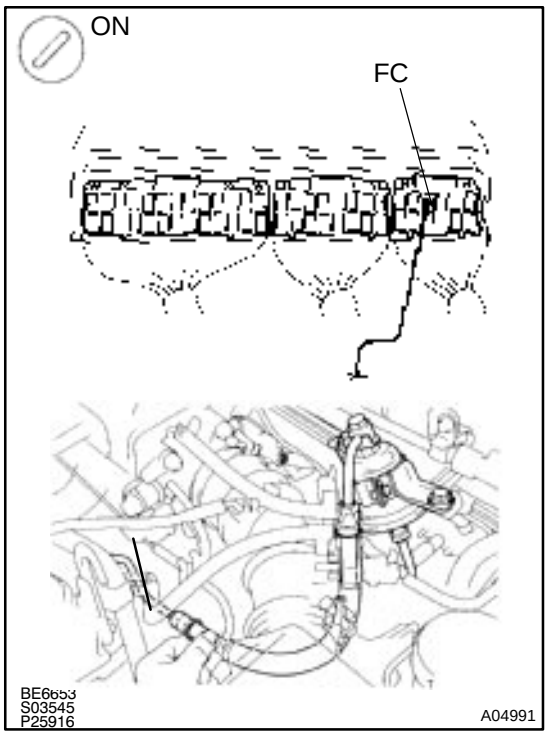

PREPARATION:

(a) Remove the lower finish panel.

(b) Turn ignition switch ON.

CHECK:

(a) Connect between terminal FC of ECM and body ground.

(b) Check for fuel pressure in the inlet hose when it is pinched off.

OK:

There is pressure in fuel inlet hose.

HINT:

At this time, you will hear a fuel return flowing noise.

OK → **Check for starter signal circuit (See page DI–109).**

NG

2	**Check for ECM power source circuit (See page DI–112).**

NG → **Repair or replace.**

OK

3	**Check circuit opening relay (See page SF–38).**

NG → **Replace circuit opening relay.**

OK

4	Check voltage between terminal FC of ECM connector and body ground (See page DI–115).

NG → Check for open in harness and connector between EFI main relay and circuit opening relay, circuit opening relay and ECM.

OK

5	Check fuel pump (See page SF–1).

NG → Repair or replace fuel pump.

OK

6	Check for open in harness and connector between circuit opening relay and fuel pump, fuel pump and body ground (See page IN–27).

NG → Repair or replace harness or connector.

OK

Check and replace ECM (See page IN–27).

DI4OB–01

DTC	P1300	Ignition Circuit Malfunction

CIRCUIT DESCRIPTION

A DIS (Direct ignition system) has been adopted. The DIS improves the ignition timing accuracy, reduces high–voltage loss, and enhances the overall reliability of the ignition system by eliminating the distributor. The DIS is a 2–cylinder simultaneous ignition system which ignites 2 cylinders simultaneously with one ignition coil. In the 2 cylinder simultaneous ignition system, each of the 2 spark plugs is connected to the end of the secondary winding. High voltage generated in the secondary winding is applied directly to the 2 spark plug. The sparks of the 2 sparks plugs pass simultaneously from the center electrode to the ground electrode.

The ECM determines ignition timing and outputs the ignition signals (IGT) for each cylinder. Based on IGT signals, the igniter controls the primary ignition signals (IGC) for all ignition coils. At the same time, the igniter also sends an ignition confirmation signal (IGF) as a fail–safe measure to the ECM.

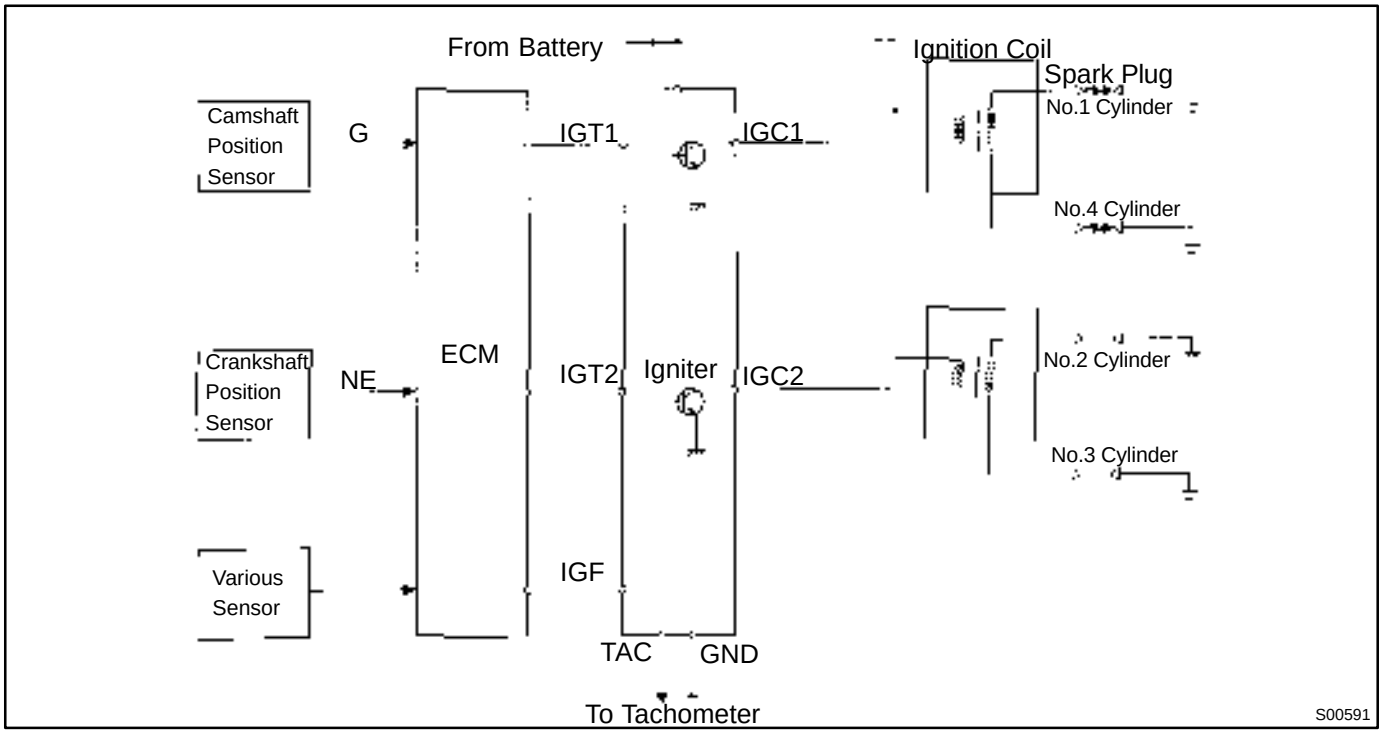

DTC No.	DTC Detecting Condition	Trouble Area
P1300	No IGF signal to ECM while engine running	• Open or short in IGF or IGT1 circuit from igniter to ECM • Igniter • ECM

WIRING DIAGRAM

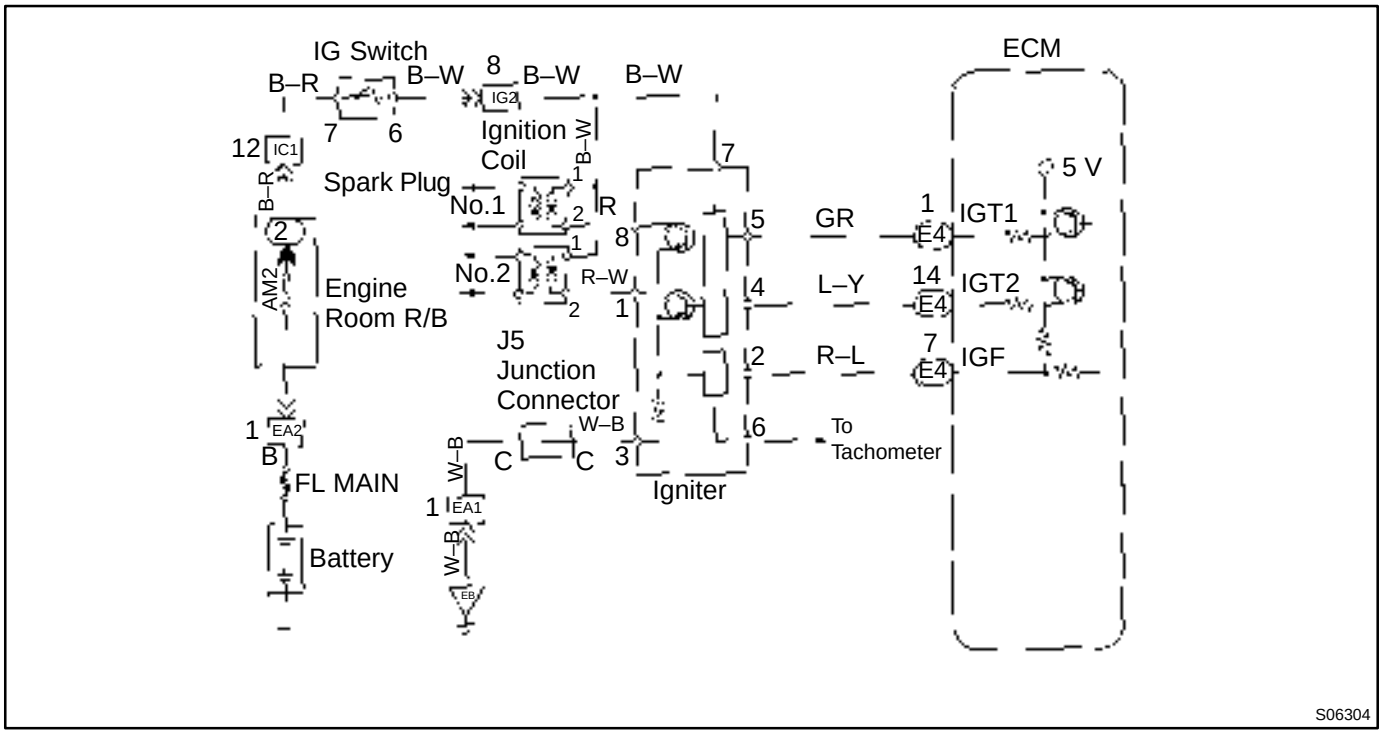

INSPECTION PROCEDURE

1	**Check for spark plug and spark (See page IG–1,).**

NG → **Go to step 4.**

OK

2	**Check for open and short in harness and connector in IGF signal circuit between ECM and igniter (See page IN–27).**

NG → **Repair or replace harness or connector.**

OK

3	Disconnect igniter connector and check voltage between terminal IGF of ECM connector and body ground.

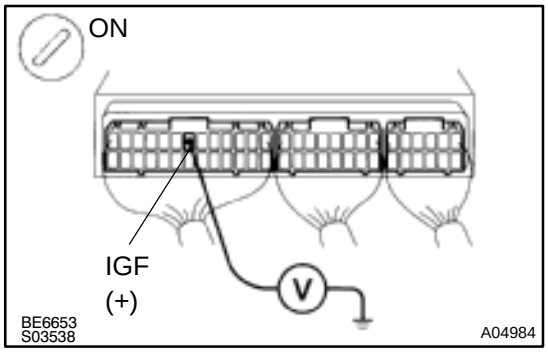

PREPARATION:
(a) Disconnect the igniter connector.
(b) Remove the lower finish panel.
(c) Turn ignition switch ON.

CHECK:
Measure voltage between terminal IGF of ECM connector and body ground.

OK:
Voltage: 4.5 – 5.5 V

OK → **Replace igniter.**

NG

Check and replace ECM (See page IN–27).

4	Check for open and short in harness and connector in IGT1 and IGT2 signal circuits between ECM and igniter (See page IN–27).

NG → **Repair or replace harness or connector.**

OK

5	Check voltage between terminals IGT1,2 of ECM connector and body ground.

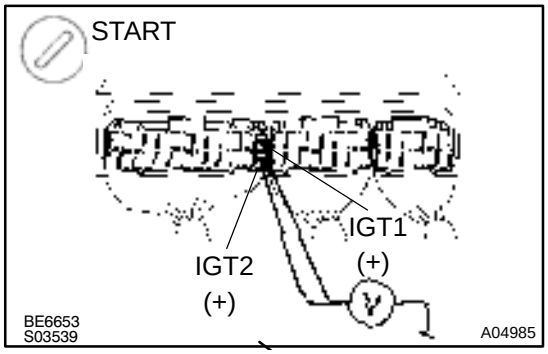

PREPARATION:
Remove the lower finish panel.

CHECK:
Measure voltage between terminals IGT1 and IGT2 of ECM connector and body ground when engine is cranked.

OK:
Voltage: More than 0.1 V and less than 4.5 V

Reference: INSPECTION USING OSCILLOSCOPE

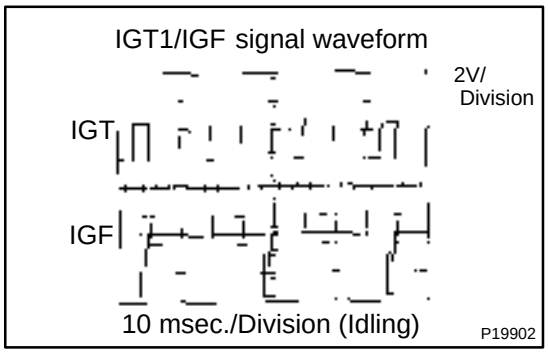

- During idling, check waveform between terminals IGT1 and E1 of ECM.

HINT:

The correct waveform are as shown.

IGT2 signal waveform is same as the IGT1 signal waveform.

NG → **Check and replace ECM (See page IN–27).**

NG

6	**Disconnect igniter connector and check voltage between terminals IGT1 and IGT2 of ECM connector and body ground.**

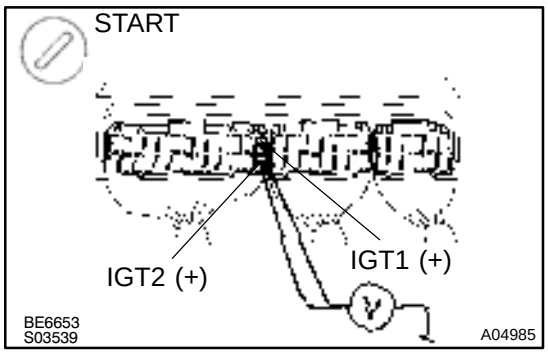

PREPARATION:

(a) Disconnect the igniter connector.

(b) Remove the lower finish panel.

CHECK:

Measure voltage between terminals IGT1 and IGT2 of ECM connector and body ground when engine is cranked.

OK:

Voltage: More than 0.1 V and less than 5 V

NG → **Check and replace ECM (See page IN–27)**

OK

7	**Check voltage between terminal 7 of igniter connector and body ground.**

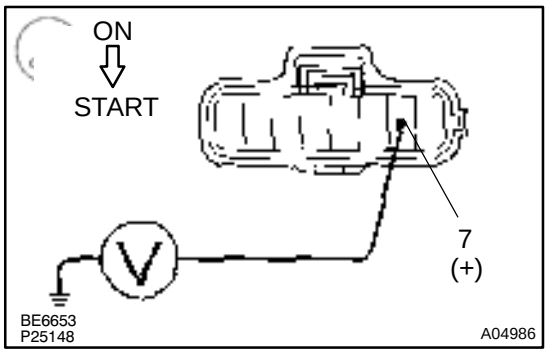

PREPARATION:
Disconnect the igniter connector.
CHECK:
Measure voltage between terminal 7 of igniter connector and body ground, when ignition switch is turned to "ON" and "START" position.
OK:
Voltage: 9 – 14 V

NG → **Check and repair igniter power source circuit.**

OK

8	**Check for open and short in harness and connector between ignition switch and ignition coil, ignition coil and igniter (See page IN–27).**

NG → **Repair or replace harness or connector.**

OK

9	**Check ignition coil (See page IG–1)**

NG → **Replace ignition coil.**

OK

Replace igniter.

DI4OC–01

DTC	P1335	Crankshaft Position Sensor Circuit Malfunction (during engine running)

CIRCUIT DESCRIPTION

Refer to "Crankshaft Position Sensor "A" Circuit Malfunction " on page DI–62.

DTC No. (See Page)	Detection Item	Trouble Area
P1335	No crankshaft position sensor signal to ECM with engine speed 1,000 rpm or more	• Open or short in crankshaft position sensor circuit • Crankshaft position sensor • ECM

See DTC P0335 on page Wiring Diagram and Inspection Procedure.

DTC	P1520	Stop Light Switch Signal Malfunction (Only for A/T)

CIRCUIT DESCRIPTION

This signal is used to detect when the brakes have been applied. The STP signal voltage is the same as the voltage supplied to the stop lights.
The STP signal is used mainly to control the fuel cut–off engine speed. (The fuel cut–off engine speed is reduced slightly when the vehicle is braking.)

DTC No.	DTC Detecting Condition	Trouble Area
P1520	The stop light switch does not turn off even once the vehicle is driven (2 trip detection logic)	• Short in stop light switch signal circuit • Stop light switch • ECM

WIRING DIAGRAM

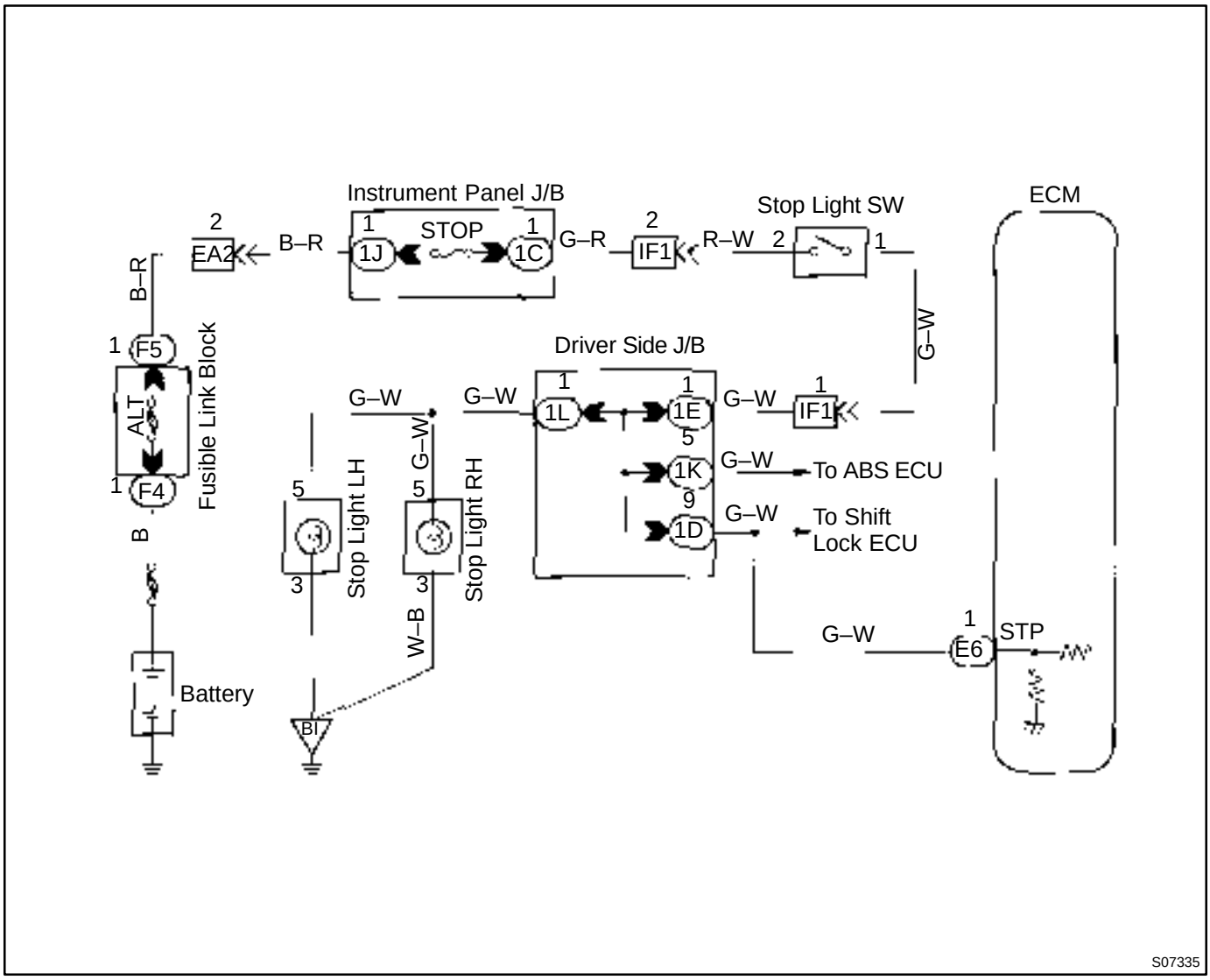

INSPECTION PROCEDURE

1	**Check operation of stop light.**

PREPARATION:
Check if the stop lights go on and off normally when the brake pedal is operated and released.

NG → **Check and repair stop light circuit.**

OK

2	**Check STP signal.**

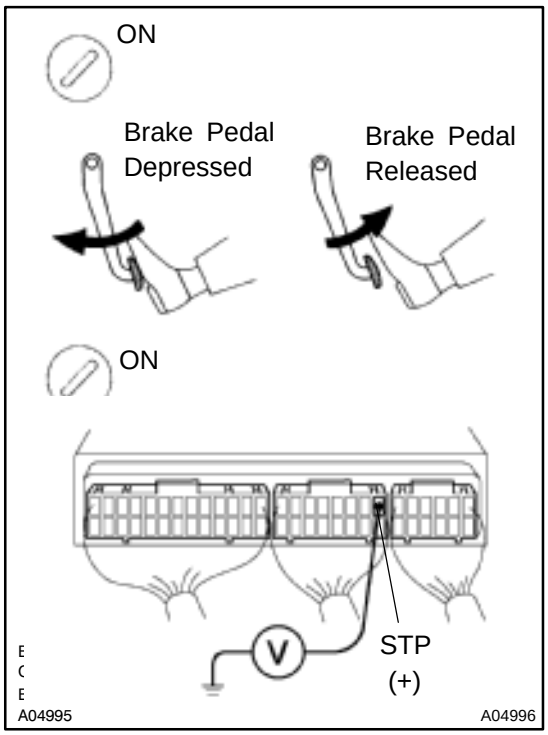

When using TOYOTA hand–held tester:

PREPARATION:

(a) Remove the fuse cover on the instrument panel.
(b) Connect the TOYOTA hand–held tester to the DLC3.
(c) Turn ignition switch ON and TOYOTA hand–held tester main switch ON.

CHECK:

Read the STP signal on the TOYOTA hand–held tester.

OK:

Brake pedal is depressed: STP ... ON
Brake pedal is released: STP ... OFF

When not using TOYOTA hand–held tester:

PREPARATION:

Turn the ignition switch ON.

CHECK:

Check voltage between terminal STP of ECM and body ground.

OK:

Brake pedal	Voltage
Depressed	7.5 – 14 V
Released	Below 1.5 V

OK → **Check for intermittent problems (See page DI–3).**

NG

3	**Check harness and connector between ECM and stop light switch (See page IN–27).**

NG → **Repair or replace harness or connector.**

OK

Check and replace ECM (See page IN–27).

DI4OE–01

DTC	P1600	ECM BATT Malfunction

CIRCUIT DESCRIPTION

Battery positive voltage is supplied to terminal BATT of the ECM even when the ignition switch is OFF for use by the DTC memory and air–fuel ratio adaptive control value memory, etc.

DTC No.	DTC Detecting Condition	Trouble Area
P1600	Open in back up power source circuit	• Open in back up power source circuit • ECM

HINT:

If DTC P1600 appear, the ECM does not store another DTC.

WIRING DIAGRAM

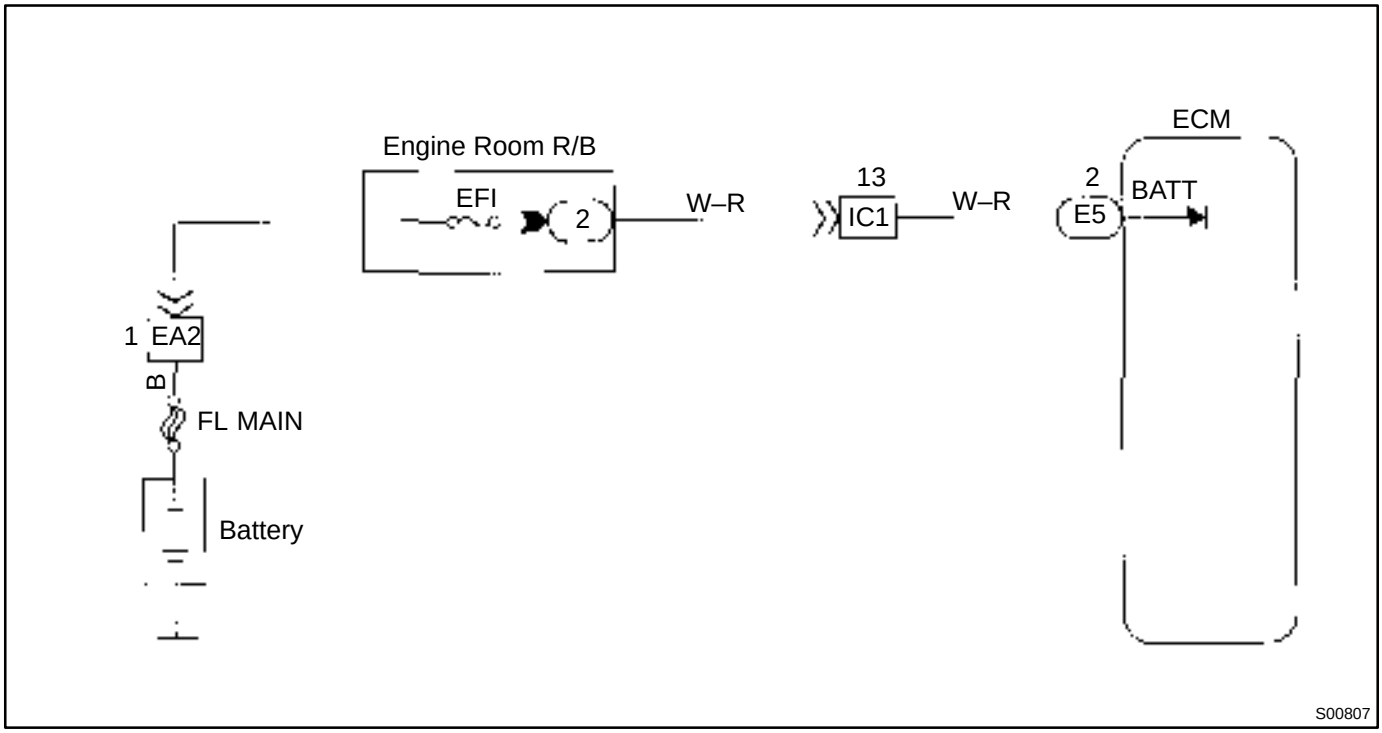

INSPECTION PROCEDURE

1	**Check voltage between terminal BATT of ECM connector and body ground.**

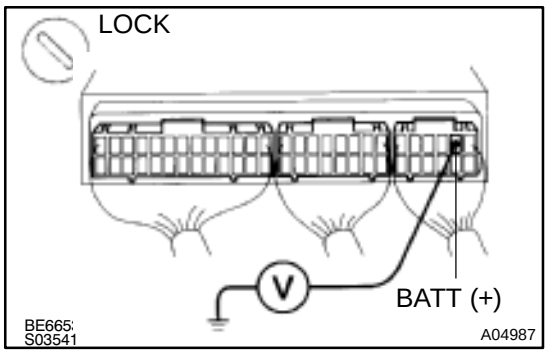

PREPARATION:
Remove the lower finish panel.
CHECK:
Measure voltage between terminal BATT of ECM connector and body ground.
OK:
Voltage: 9 – 14 V

OK → **Check and replace ECM (See page IN–27).**

NG

2	**Check EFI fuse.**

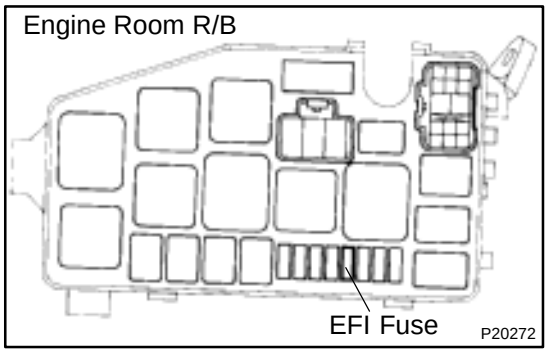

PREPARATION:
Remove the EFI fuse from the engine room R/B.
CHECK:
Check continuity of EFI fuse.
OK:
Continuity

NG → **Check for short in all the harness and components connected to EFI fuse.**

OK

Check and repair harness or connector between battery, EFI fuse and ECM.

DI4OF–01

DTC	P1780	Park/Neutral Position Switch Malfunction

CIRCUIT DESCRIPTION

The park/neutral position switch goes on when the shift lever is in the N or P shift position. When it goes on terminal NSW of the ECM is grounded to body ground via the starter relay thus the terminal NSW voltage becomes 0 V. When the shift lever is in the D, 2, L or R position, the park/neutral position switch goes off, so the voltage of ECM terminal NSW becomes battery positive voltage, the voltage of the ECM internal power source.

If the shift lever is moved from the N position to the D position, this signal is used for air–fuel ratio correction and for idle speed control (estimated control), etc.

DTC No.	DTC Detecting Condition	Trouble Area
P1780	When driving under conditions (a) and (b) for 30 seconds or more, the park/neutral position switch is ON (N position) (2 trip detection logic) (a) Vehicle speed: 80 km/h (50 mph) or more (b) Engine speed: 2,000 – 3,000 rpm	• Short in park/neutral position switch circuit • Park/neutral position switch • ECM

HINT:

- After confirming DTC P1780 use the TOYOTA hand–held tester to confirm the PNP switch signal from ”CURRENT DATA”.
- After confirming DTC P1780, in the case that the diagnostic trouble codes are erased by disconnecting the battery terminals or EFI fuse, after operating the shift lever few times from P or N position to D position, confirm the PNP switch signal using the ”CURRENT DATA” of TOYOTA hand–held tester. If the PNP switch signal is not displayed on TOYOTA hand–held tester, the circuit of PNP switch may be short.

WIRING DIAGRAM

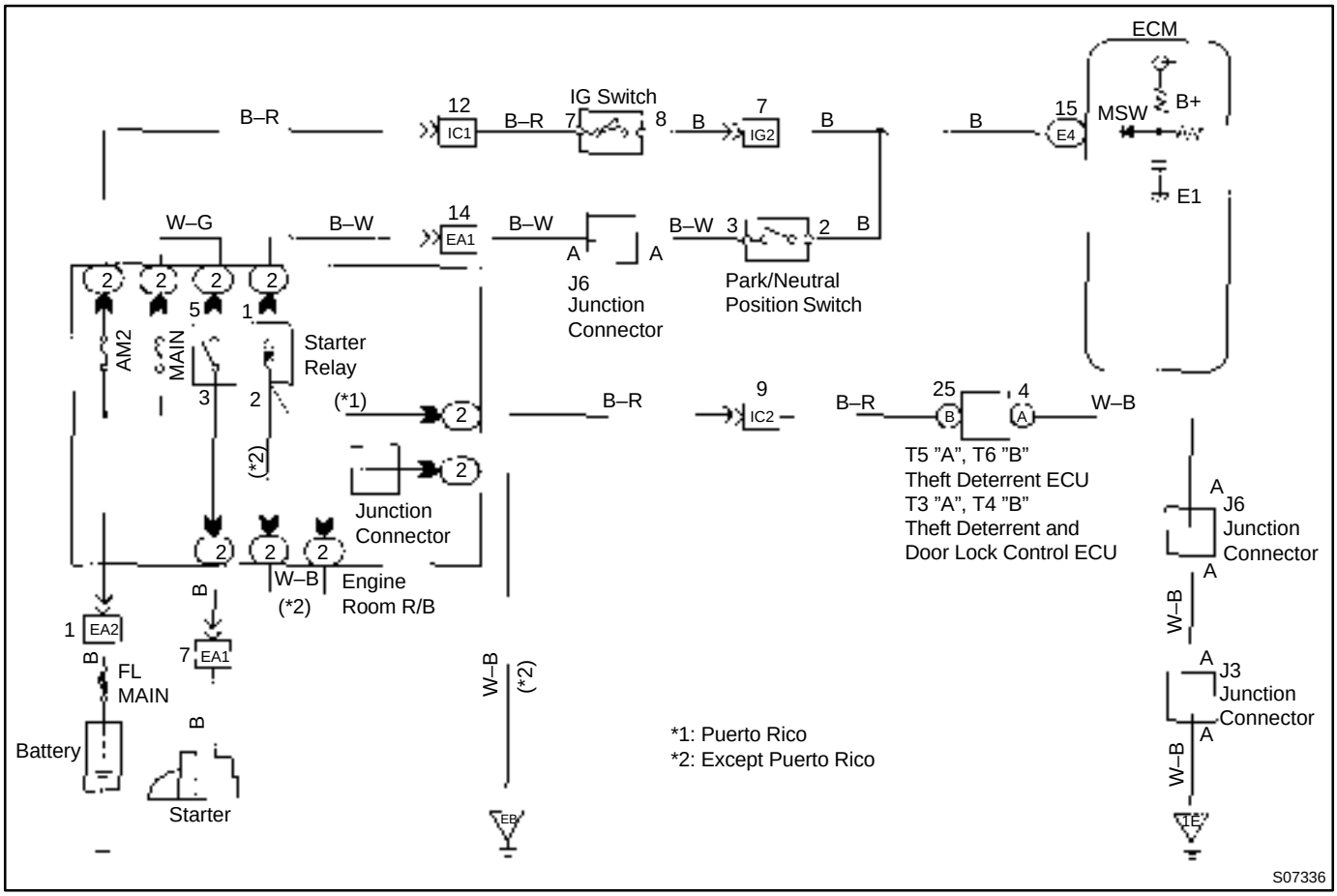

INSPECTION PROCEDURE

1	Check park/neutral position switch.

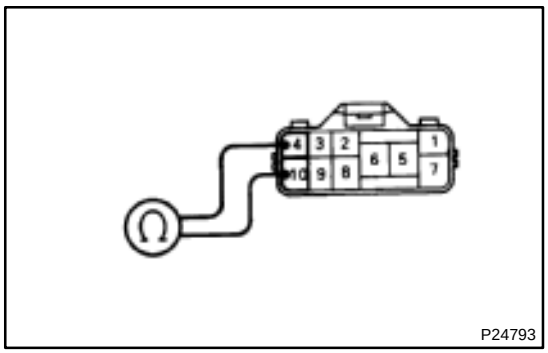

PREPARATION:
Disconnect the park/neutral position switch connector.
CHECK:
Check continuity between each terminal shown below when the shift lever is positioned to each range.
OK:

Shift position	Terminal	Terminal
P	5 – 6	4 – 7
R	–	4 – 8
N	5 – 6	4 – 10
D	–	4 – 9
2	–	2 – 4
L	–	3 – 4

NG → **Replace park/neutral position switch.**

OK ↓

2	Check voltage between terminal NSW of ECM connector and body ground.

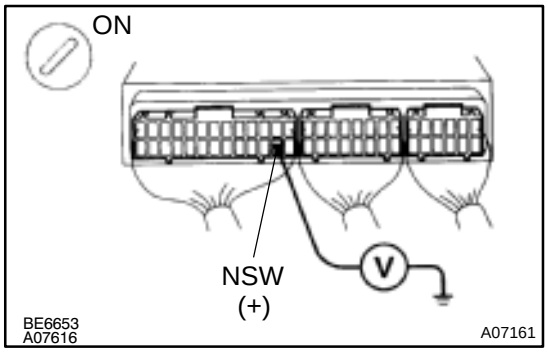

PREPARATION:
(a) Remove the lower finish panel.
(b) Turn ignition switch ON.
CHECK:
Measure voltage between terminal NSW of ECM connector and body ground after the shift lever is moved to the following positions.
OK:

Shift lever position	P or N	L, 2, D or R
Voltage	0 – 3 V	9 – 14 V

OK → **Check and replace ECM (See page IN–27).**

OK ↓

Check for open and short in harness and connector between ECM and park/neutral position switch (See page IN–27).

DI4NO–01

CIRCUIT INSPECTION

DTC	P0105	Manifold Absolute Pressure/Barometric Pressure Circuit Malfunction

CIRCUIT DESCRIPTION

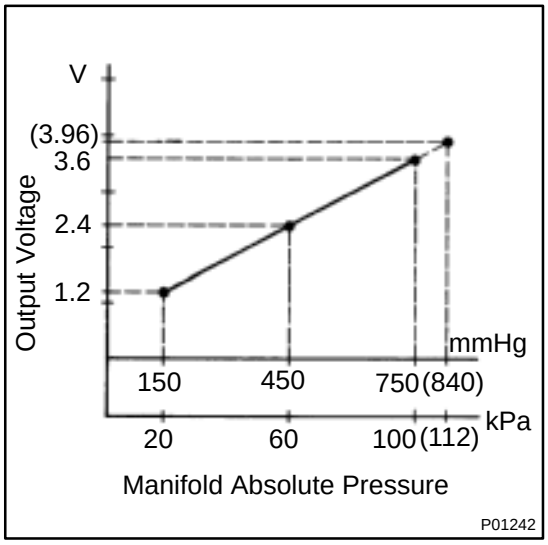

By a built–in sensor unit, the manifold absolute pressure sensor detects the intake manifold pressure as a voltage. The ECM then determines the basic injection duration and basic injection advance angle based on this voltage. Since the manifold absolute pressure sensor does not use the atmospheric pressure as a criterion, but senses the absolute pressure inside the intake manifold (the pressure in proportion to the present absolute vacuum 0), it is not influenced by fluctuations in the atmospheric pressure due to high altitude and other factors. This permits it to control the air–fuel ratio at the proper lever under all conditions.

DTC No.	DTC Detecting Condition	Trouble Area
P0105	Open or short in manifold absolute pressure sensor circuit	• Open or short in manifold absolute pressure sensor circuit • Manifold absolute pressure sensor • ECM

If the ECM detects DTC ”P0105” it operates the fail–safe function, keeping the ignition timing and injection volume constant and making it possible to drive the vehicle.

HINT:

After confirming DTC P0105, use the OBD II scan tool or TOYOTA hand–held tester to confirm the manifold absolute pressure from ”CURRENT DATA”.

Manifold Absolute Pressure	Malfunction
0 kPa	• PIM circuit short
130 or more	• VC circuit open or short • PIM circuit open • E2 circuit open

WIRING DIAGRAM

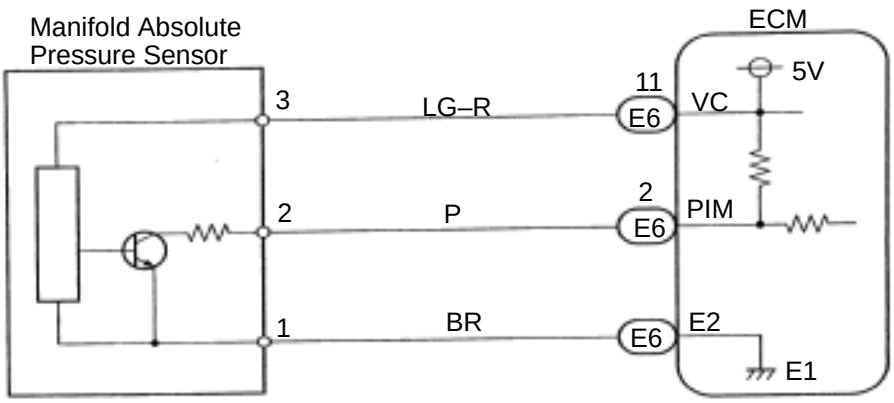

INSPECTION PROCEDURE

HINT:

If DTC ”P0105” (Manifold Absolute Pressure/Barometric Pressure Circuit Malfunction), ”P0110” (Intake Air Temp. Circuit Malfunction), ”P0115” (Engine Coolant Temp. Circuit Malfunction), ”P0120” (Throttle/Pedal Position Sensor/Switch ”A” Circuit Malfunction) are output simultaneously, E2 (sensor ground) may be open.

1	**Connect the OBD II scan tool or TOYOTA hand–held tester, and read value of manifold absolute pressure.**

PREPARATION:

(a) Remove the fuse cover on the instrument panel.
(b) Connect the OBD II scan tool or TOYOTA hand–held tester to the DLC3.
(c) Turn ignition switch ON and OBD II scan tool or TOYOTA hand–held tester main switch ON.

CHECK:

Read value of manifold absolute pressure on the OBD II scan tool or TOYOTA hand–held tester.

OK:

Same as atmospheric pressure.

OK → **Check for intermittent problems (See page DI–3).**

NG

2	Check voltage between terminals VC and E2 of ECM connector.

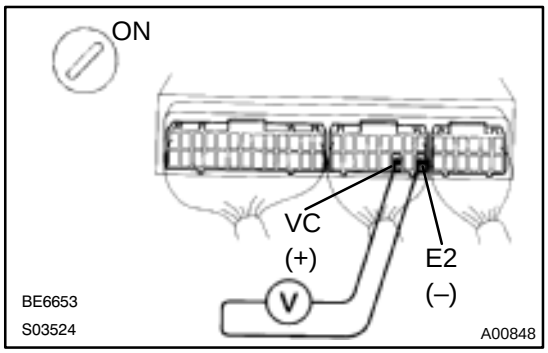

PREPARATION:
(a) Remove lower finish panel.
(b) Turn ignition switch ON.

CHECK:
Measure voltage between terminals VC and E2 of ECM connector.

OK:
Voltage: 4.5 – 5.5 V

NG → **Check and replace ECM (See page IN–27).**

OK

3	Check voltage between terminals PIM and E2 of ECM connector.

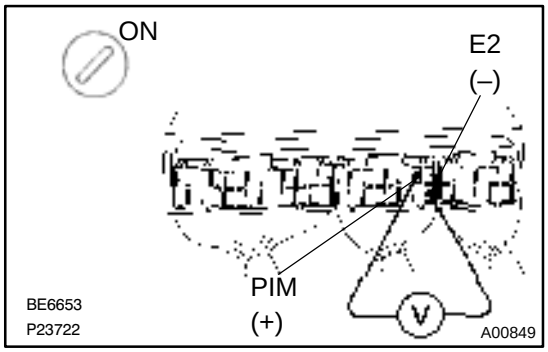

PREPARATION:
(a) Remove the lower finish panel.
(b) Turn ignition switch ON.

CHECK:
Measure voltage between terminals PIM and E2 of ECM connector.

OK:
Voltage: 3.3 – 3.9 V

OK → **Check and replace ECM (See page IN–27).**

NG

4	**Check for open and short in harness and connector between manifold absolute pressure sensor and ECM.**

NG → **Repair and replace harness or connector.**

OK

Replace manifold absolute pressure sensor.

DTC	P0106	Manifold Absolute Pressure/Barometric Pressure Circuit Range/Performance Problem

CIRCUIT DESCRIPTION

Refer to Manifold Absolute Pressure/Barometric Pressure Circuit Malfunction on page DI–21.

DTC No.	DTC Detecting Condition	Trouble Area
P0106	Conditions (a) and (b) continue with engine speed 400 – 1,000 rpm: (2 trip detection logic) (a) Closed throttle position switch: ON (b) Manifold absolute pressure sensor output > 3.0 V	• Manifold absolute pressure sensor
	Condition (a) and (b) continue with engine speed 2,500 rpm or more: (2 trip detection logic) (a) Throttle position sensor output > 1.73 V (b) Manifold absolute pressure sensor output < 1.0 V	

WIRING DIAGRAM

Refer to Manifold Absolute Pressure/Barometric Pressure Circuit Malfunction on page DI–21.

INSPECTION PROCEDURE

HINT:

If DTC ”P0105” (Manifold Absolute Pressure/Barometric Pressure Circuit Malfunction) and ”P0106” (Manifold Absolute Pressure/Barometric Pressure Circuit Range/Performance Problem) are output simultaneously, manifold absolute pressure sensor circuit may be open.

Perform troubleshooting of DTC P0105 first.

1	**Are there any other codes (besides DTC P0106) being output?**

YES → **Go to relevant DTC chart.**

NO

2	Check manifold absolute pressure sensor operation (See page SF–48).

NG → Replace manifold absolute pressure sensor.

OK

Check vacuum line for manifold absolute pressure sensor for blockage.

DI4NQ–01

DTC	P0110	Intake Air Temp. Circuit Malfunction

CIRCUIT DESCRIPTION

(fig.1)

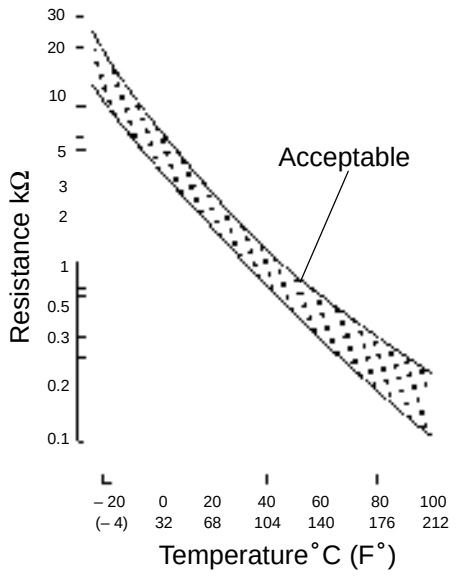

The intake air temp. sensor is built into the air cleaner cap and senses the intake air temperature.
A thermistor built in the sensor changes the resistance value according to the intake air temperature.
The lower the intake air temperature, the greater the thermistor resistance value, and the higher the intake air temperature, the lower the thermistor resistance value (See Fig.1.).
The intake air temperature sensor is connected to the ECM (See next page). The 5 V power source voltage in the ECM is applied to the intake air temperature sensor from the terminal THA via a resistor R.
That is, the resistor R and the intake air temperature sensor are connected in series. When the resistance value of the intake air temperature sensor changes in accordance with changes in the intake air temperature, the potential at terminal THA also changes. Based on this signal, the ECM increases the fuel injection volume to improve driveability during cold engine operation.
If the ECM detects the DTC ”P0110”, it operates the fail–safe function in which the intake air temperature is assumed to be 20˚C (68˚F).

Intake air temp. ˚C (˚F)	Resistance (kΩ)	Voltage (V)
–20 (–4)	16.2	4.3
0 (32)	5.9	3.4
20 (68)	2.5	2.4
40 (104)	1.1	1.5
60 (140)	0.6	0.9
80 (176)	0.3	0.5
100 (212)	0.2	0.3

DTC No.	DTC Detecting Condition	Trouble Area
P0110	Open or short in intake air temp. sensor circuit	• Open or short in intake air temp. sensor circuit • Intake air temp. sensor • ECM

HINT:
After confirming DTC P110, use the OBD II scan tool or TOYOTA nand–held tester to confirm the intake air temp. from ”CURRENT DATA”.

Temp. Displayed	Malfunction
– 40˚C (– 40˚F)	Open circuit
140˚C (284˚F) or more	Short circuit

WIRING DIAGRAM

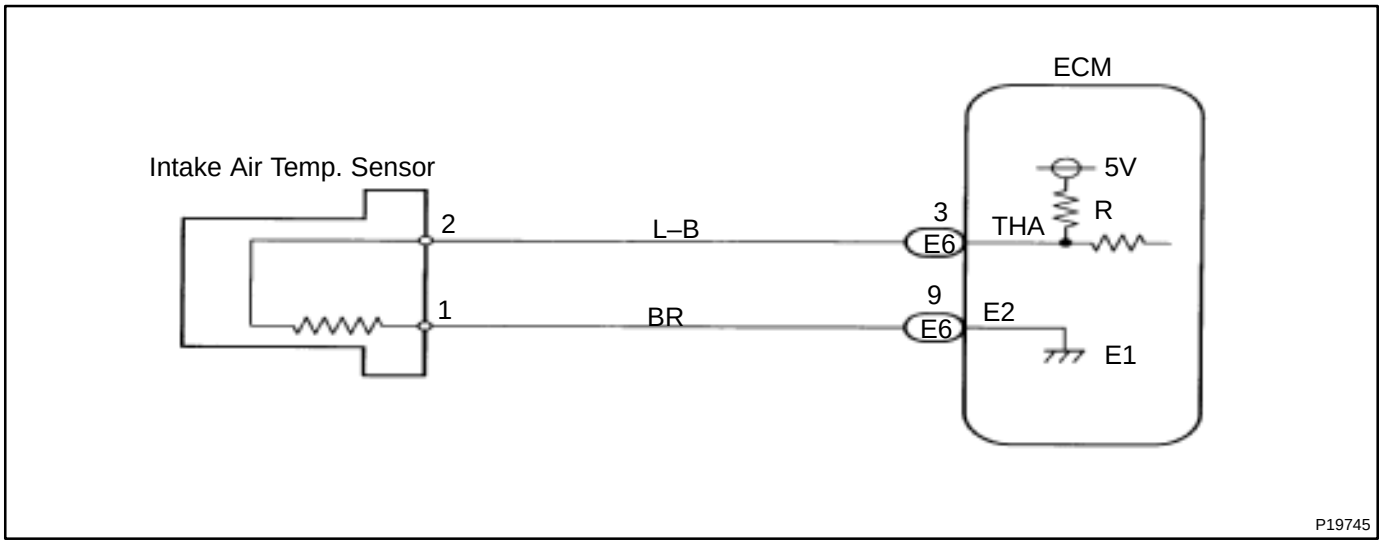

INSPECTION PROCEDURE

HINT:

If DTC ”P0105” (Manifold Absolute Pressure/Barometric Pressure Circuit Malfunction), ”P0106” (Manifold Absolute Pressure /Barometric Pressure Circuit Range/Performance Problem), ”P0110” (Intake Air Temp. Circuit Malfunction), ”P0115” (Engine Coolant Temp. Circuit Malfunction), ”P0120” (Throttle/Pedal Position Sensor/Switch ”A” Circuit Malfunction) are output simultaneously, E2 (sensor ground) may be open.

1	**Connect the OBD II scan tool or TOYOTA hand–held tester, and read value of intake air temp.**

PREPARATION:

(a) Remove the fuse cover on the instrument panel.
(b) Connect the OBD II scan tool or TOYOTA hand–held tester to DLC3.
(c) Turn ignition switch ON and OBD II scan tool or TOYOTA hand–held tester main switch ON.

CHECK:

Read temperature value on the OBD II scan tool or TOYOTA hand–held tester.

OK:

Same as actual intake temperature.

HINT:

- If there is open circuit, OBD II scan tool or TOYOTA hand–held tester indicates – 40˚C (– 40˚F).
- If there is short circuit, OBD II scan tool or TOYOTA hand–held tester indicates 140˚C (284˚F) or more.

NG → **– 40˚C (– 40˚F) ....Go to step 2.**
140˚C (284˚F) or more ....Go to step NO TAG.

OK

Check for intermittent problems
(See page DI–3).

2	Check for open in harness or ECM.

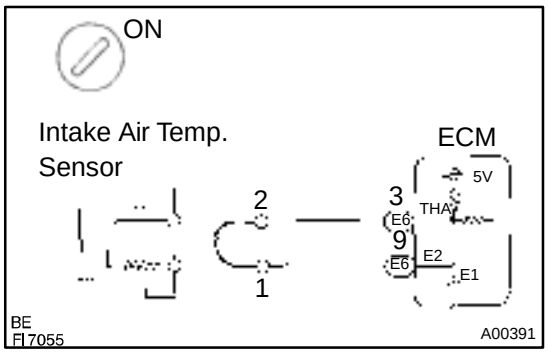

PREPARATION:

(a) Disconnect the intake temp. sensor connector.
(b) Connect sensor wire harness terminals together.
(c) Turn ignition switch ON.

CHECK:

Read temperature value on the OBD II scan tool or TOYOTA hand–held tester.

OK:

Temperature value: 140˚C (284˚F) or more

OK	Confirm good connection at sensor. If OK, replace intake air temp. sensor.

NG

3	Check for open in harness or ECM.

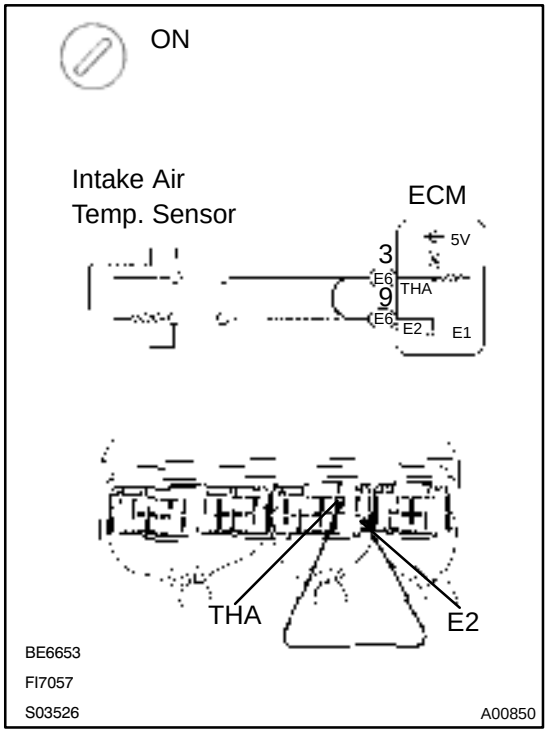

PREPARATION:

(a) Remove the lower finish panel.
(b) Connect between terminals THA and E2 of ECM connector.

HINT:

Intake air temp. sensor connector is disconnected.

Before checking, do a visual and contact pressure check for the ECM connector (See page IN–27).

(c) Turn ignition switch ON.

CHECK:

Read temperature value on the OBD II scan tool or TOYOTA hand–held tester.

OK:

Temperature value: 140˚C (284˚F) or more

OK	Open in harness between terminal E2 or THA, repair or replace harness.

NG

Confirm good connection at ECM.
If OK, replace ECM.

4	Check for short in harness and ECM.

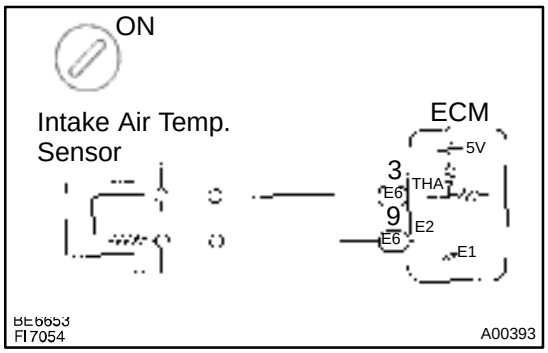

PREPARATION:

(a) Disconnect the intake air temp. sensor connector.

(b) Turn ignition switch ON.

CHECK:

Read temperature value on the OBD II scan tool or TOYOTA hand–held tester.

OK:

Temperature value: – 40˚C (– 40˚F)

OK	Replace intake air temp. sensor.

NG

5	Check for short in harness or ECM.

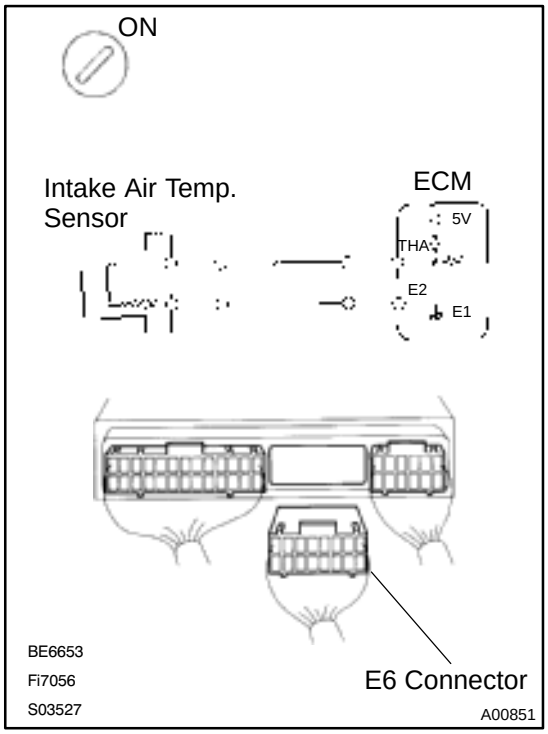

PREPARATION:

(a) Remove the lower finish panel.

(b) Disconnect the ”E6” connector of ECM.

HINT:

Intake air temp. sensor connector is disconnected.

(c) Turn ignition switch ON.

CHECK:

Read temperature value on the OBD II scan tool or TOYOTA hand–held tester.

OK:

Temperature value: – 40˚C (– 40˚F)

OK	Repair or replace harness or connector.

NG

Check and replace ECM (See page IN–27).

DI4NR–01

DTC	P0115	Engine Coolant Temp. Circuit Malfunction

CIRCUIT DESCRIPTION

A thermistor built into the engine coolant temperature sensor changes the resistance value according to the engine coolant temperature.

The structure of the sensor and connection to the ECM is the same as in the intake air temp. circuit malfunction shown on page DI–27.

If the ECM detects the DTC P0115, it operates the fail–safe function in which the engine coolant temp. is assumed to be 80˚C (176 ˚F).

DTC No.	Detection Item	Trouble Area
P0115	Open or short in engine coolant temp. sensor circuit	• Open or short in engine coolant temp. sensor circuit • Engine coolant temp. sensor • ECM

HINT:

After confirming DTC P0115 use the OBD II scan tool or TOYOTA hand–held tester to confirm the engine coolant temp. from ”CURRENT DATA”.

Temperature Displayed	Malfunction
– 40˚C (– 40˚F)	Open circuit
140˚C (284˚F) or more	Short circuit

WIRING DIAGRAM

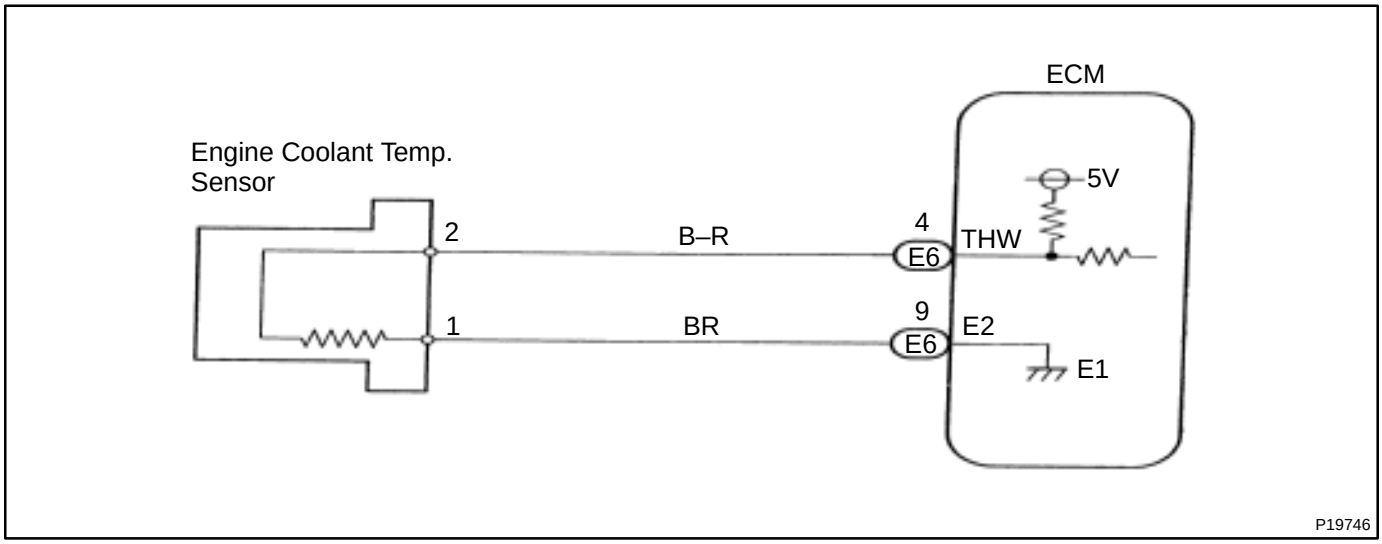

INSPECTION PROCEDURE

HINT:

If DTC ”P0105” (Manifold Absolute Pressure/Barometric Pressure Circuit Malfunction), ”P0106” (Manifold Absolute Pressure/Barometric Pressure Circuit Range/Performance Problem), ”P0110” (Intake Air Temp. Circuit Malfunction), ”P0115” (Engine Coolant Temp. Circuit Malfunction), ”P0120” (Throttle/Pedal Position Sensor/Switch ”A” Circuit Malfunction) are output simultaneously, E2 (sensor ground) may be open.

1	**Connect the OBD II scan tool or TOYOTA hand–held tester, and read value of engine coolant temp.**

PREPARATION:

(a) Remove the fuse cover on the instrument panel.
(b) Connect the OBD II scan tool or TOYOTA hand–held tester to the DLC3.
(c) Turn ignition switch ON and OBD II scan tool or TOYOTA hand–held tester main switch ON.

CHECK:

Read temperature value on the OBD II scan tool or TOYOTA hand–held tester.

OK:

Same as actual engine coolant temperature.

HINT:

- If there is open circuit, OBD II scan tool or TOYOTA hand–held tester indicates – 40˚C (– 40˚F).
- If there is short circuit, OBD II scan tool or TOYOTA hand–held tester indicates 140˚C (284˚F) or more.

NG → **– 40˚C (– 40˚F) ... Go to step 2.**
140˚C (284˚F) or more ... Go to step 4.

OK

Check for intermittent problems (See page DI–3).

2	**Check for open in harness or ECM.**

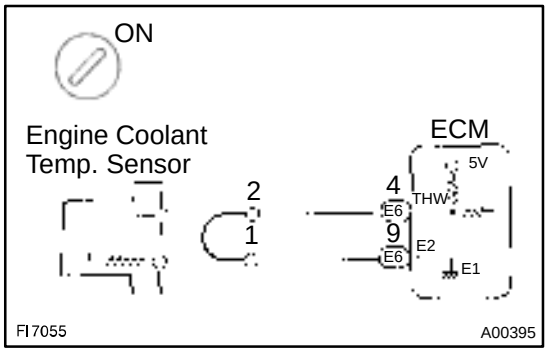

PREPARATION:

(a) Disconnect the engine coolant temp. sensor connector.
(b) Connect sensor wire harness terminals together.
(c) Turn ignition switch ON.

CHECK:

Read temp. value on the OBD II scan tool or TOYOTA hand–held tester.

OK:

Temperature value: 140˚C (284˚F) or more.

OK → **Confirm good connection at sensor. If OK, replace engine coolant temp. sensor.**

NG

3	Check for open in harness or ECM.

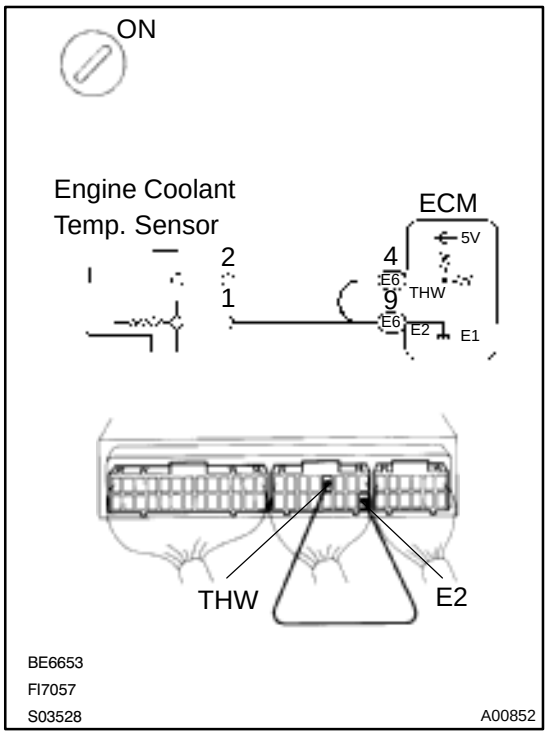

PREPARATION:

(a) Remove the lower finish panel.

(b) Connect between terminals THW and E2 of ECM connector.

HINT:

Engine coolant temp. sensor connector is disconnected. Before checking, do a visual and contact pressure check for the ECM connector.

(c) Turn ignition switch ON.

CHECK:

Read temperature value on the OBD II scan tool or TOYOTA hand–held tester.

OK:

Temperature value: 140˚C (284˚F) or more

OK → **Open in harness between terminals E2 or THW, repair or replace harness.**

NG

**Confirm good connection at ECM.
If OK, replace ECM**

4	Check for short in harness and ECM.

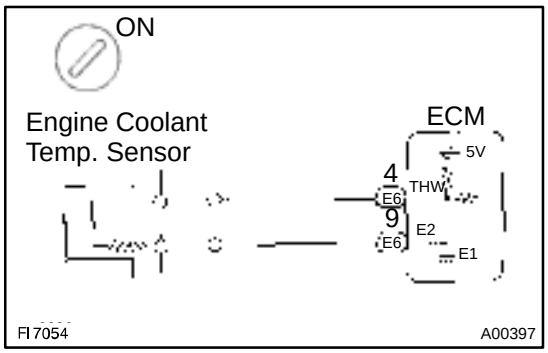

PREPARATION:

(a) Disconnect the engine coolant temp. sensor connector.

(b) Turn ignition switch ON.

CHECK:

Read temperature value on the OBD II scan tool or TOYOTA hand–held tester.

OK:

Temperature value: – 40˚C (– 40˚F)

OK	Replace engine coolant temp. sensor.

NG

5	Check for short in harness or ECM.

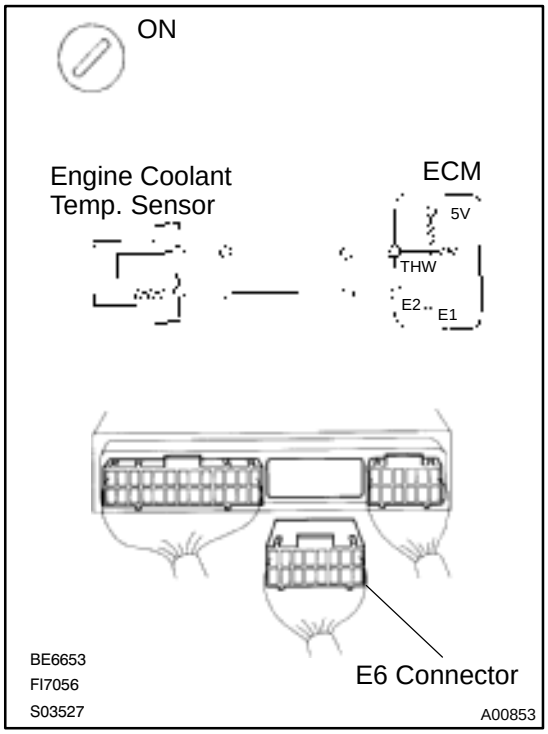

PREPARATION:

(a) Remove the lower finish panel.

(b) Disconnect the ”E6” connector of ECM.

HINT:

Engine coolant temp. sensor connector is disconnected.

(c) Turn ignition switch ON.

CHECK:

Read temperature value on the OBD II scan tool or TOYOTA hand–held tester.

OK:

Temperature value: – 40˚C (– 40˚F)

OK	Repair or replace harness or connector.

NG

Check and replace ECM (See page IN–27).

DTC	P0116	Engine Coolant Temp. Circuit Range/ Performance Problem

CIRCUIT DESCRIPTION

Refer to Engine Coolant Temp. Circuit Malfunction on page DI–31

DTC No.	DTC Detecting Condition	Trouble Area
P0116	When the engine starts, the engine coolant temp. is less than –7˚C (20˚F). And 20 min. or more after the engine starts, engine coolant temp. sensor value is 40˚C (104˚F) or less (2 trip detection logic)	• Engine coolant temp. sensor • Cooling system
	When the engine starts, the engine coolant temp. is between –7˚C (20˚F) or more and less than 10˚C (50˚F). And 5 min. or more after the engine starts, engine coolant temp. sensor value is 40˚C (104˚F) or less (2 trip detection logic)	
	When the engine starts, the engine coolant temp. is 10˚C (50˚F) or more. And 2 min. or more after the engine starts, engine coolant temp. sensor value is 40˚C (104˚F) or less (2 trip detection logic)	

INSPECTION PROCEDURE

HINT:

If DTC ”P0115” (Engine Coolant Temp. Circuit Malfunction) and ”P0116” (Engine Coolant Temp. Circuit Range/Performance Problem) are output simultaneously, engine coolant temp. sensor circuit may be open. Perform troubleshooting of DTC P0115 first.

1	Are there any other codes (besides DTC P0116) being output?

YES → Go to relevant DTC chart.

NO

2	Check thermostat (See page CO–11).

NG → Replace thermostat.

OK

Replace engine coolant temp. sensor.

DI4NT–01

DTC	P0120	Throttle/Pedal Position Sensor/Switch ”A” Circuit Malfunction

CIRCUIT DESCRIPTION

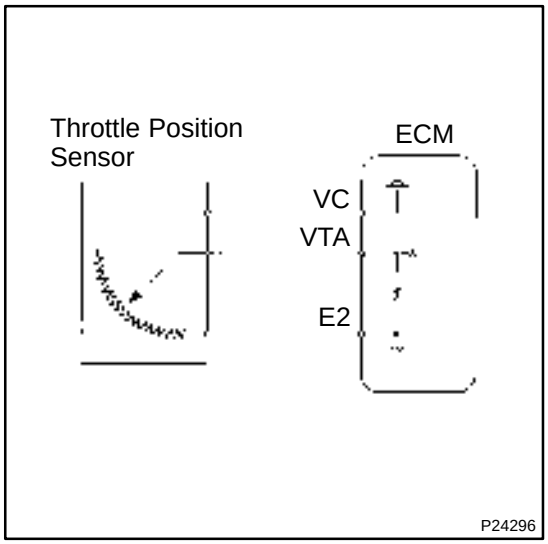

The throttle position sensor is mounted in the throttle body and detects the throttle valve opening angle. When the throttle valve is fully closed, a voltage of approximately 0.3 – 1.0 V is applied to terminal VTA of the ECM. The voltage applied to the terminals VTA of the ECM increases in proportion to the opening angle of the throttle valve and becomes approximately 3.2 – 4.9 V when the throttle valve is fully opened. The ECM judges the vehicle driving conditions from these signals input from terminal VTA and uses them as one of the conditions for deciding the air–fuel ratio correction, power increase correction and fuel–cut control etc.

DTC No.	DTC Detecting Condition	Trouble Area
P0120	Condition (a) or (b) continues: (a) VTA < 0.1 V (b) VTA > 4.9 V	• Open or short in throttle position sensor circuit • Throttle position sensor • ECM

HINT:

After confirming DTC P0120 use the OBD II scan tool or TOYOTA hand–held tester to confirm the throttle valve opening percentage.

Throttle valve opening position expressed as percentage		Trouble Area
Throttle valve fully closed	Throttle valve fully open	
0 %	0 %	VC line open VTA line open or short
100 %	100 %	E2 line open

WIRING DIAGRAM

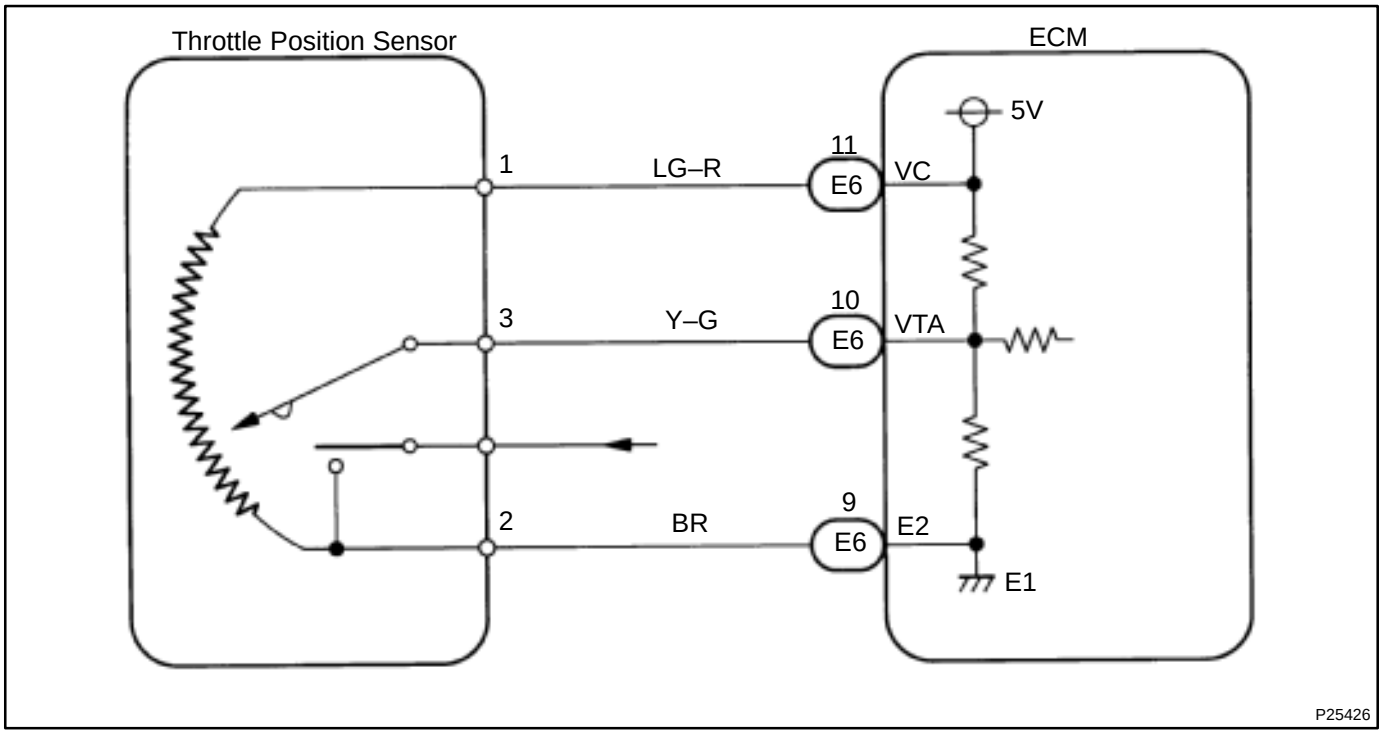

INSPECTION PROCEDURE

HINT:

If DTC ”P0105” (Manifold Absolute Pressure/Barometric Pressure Circuit Malfunction), ”P0110” (Intake Air Temp. Circuit Malfunction), ”P0115” (Engine Coolant Temp. Circuit Malfunction), ”P0120” (Throttle/Pedal Position Sensor/Switch ”A” Circuit Malfunction) are output simultaneously, E2 (sensor ground) may be open.

1	**Connect the OBD II scan tool or TOYOTA hand–held tester, read the throttle valve opening percentage.**

PREPARATION:

(a) Remove the fuse cover on the instrument panel.

(b) Connect the OBD II scan tool or TOYOTA hand–held tester to DLC3.

(c) Turn ignition switch ON and OBD II scan tool or TOYOTA hand–held tester main switch ON.

CHECK:

Read the throttle valve opening percentage.

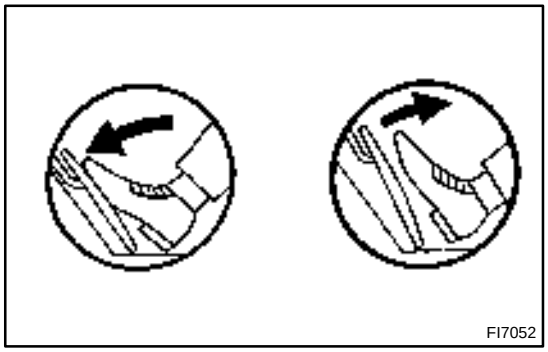

OK:

Throttle valve	Throttle valve opening position expressed as percentage
Fully open	Approx. 70 %
Fully closed	Approx. 10 %

OK → **Check for intermittent problems (See page DI–3).**

NG

2	**Check voltage between terminal 1 of wire harness side connector and body ground.**

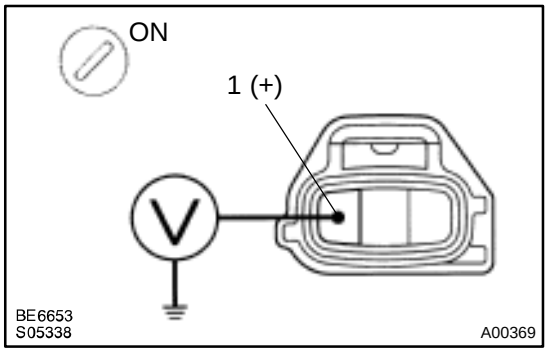

PREPARATION:

(a) Disconnect the throttle position sensor connector.

(b) Turn ignition switch ON.

CHECK:

Measure voltage between terminal 1 (VC) of wire harness side connector and body ground.

OK:

Voltage: 4.5 – 5.5 V

NG → **Go to step 5.**

OK

3	**Check throttle position sensor (See page SF–25).**

NG → **Replace throttle position sensor.**

OK

4	Check voltage between terminals VTA and E2 of ECM connector.

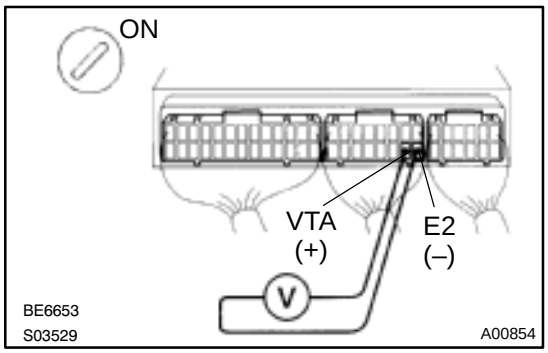

PREPARATION:
(a) Remove the lower finish panel.
(b) Turn ignition switch ON.

CHECK:
Measure voltage between terminals VTA and E2 of ECM connector.

OK:

Throttle valve	Voltage
Fully closed	0.3 – 1.0 V
Fully open	3.2 – 4.9 V

NG → **Check for open and short in harness and connector between ECM and throttle position sensor (VTA or E2 line) (See page IN–27).**

OK

Check and replace ECM (See page IN–27).

5	Check voltage between terminals VC and E2 of ECM connector.

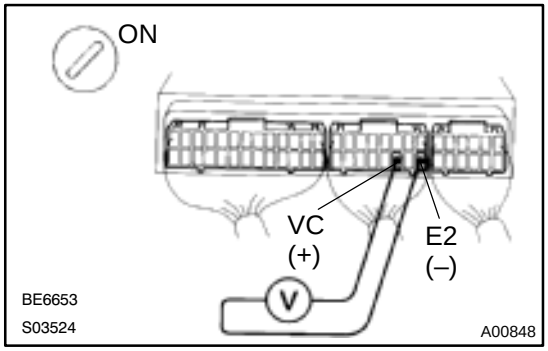

PREPARATION:
(a) Remove the lower finish panel.
(b) Turn ignition switch ON.

CHECK:
Measure voltage between terminals VC and E2 of ECM connector.

OK:

Voltage: 4.5 – 5.5 V

NG → **Check and replace ECM (See page IN–27).**

OK

Check for open in harness and connector between ECM and sensor (VC line) (See page IN–27).

DI4NU–01

DTC	P0121	Throttle/Pedal Position Sensor/Switch ”A” Circuit Range/Performance Problem

CIRCUIT DESCRIPTION

Refer to Throttle/Pedal Position Sensor/Switch ”A” Circuit Malfunction on page DI–36.

DTC No.	Detection Item	Trouble Area
P0121	While the vehicle speed drops from 30 km/h (19 mph) or more to 0 km/h (0 mph), the output value of the throttle position sensor is out of the applicable range (2 trip detection logic)	• Throttle position sensor

INSPECTION PROCEDURE

1	Are there any other codes (besides DTC P0121) being output?

YES → Go to relevant DTC chart.

NO →

Replace throttle position sensor.

DTC	P0125	Insufficient Coolant Temp. for Closed Loop Fuel Control

CIRCUIT DESCRIPTION

To obtain a high purification rate for the CO, HC and NOx components of the exhaust gas, a three–way catalytic converter is used, but for the most efficient use of the three–way catalytic converter, the air–fuel ratio must be precisely controlled so that it is always close to the stoichiometric air–fuel ratio.

The oxygen sensor has the characteristic whereby its output voltage changes suddenly in the vicinity of the stoichiometric air–fuel ratio. This characteristic is used to detect the oxygen concentration in the exhaust gas and provide feedback to the computer for control of the air–fuel ratio.

When the air–fuel ratio becomes LEAN, the oxygen concentration in the exhaust increases and the oxygen sensor informs the ECM of the LEAN, condition (small electromotive force: 0 V).

When the air–fuel ration is RICHER than the stoichiometric air–fuel ratio the oxygen concentration in the exhaust gas is reduced and the oxygen sensor informs the ECM of the RICH condition (large electromotive force: 1 V).

The ECM judges by the electromotive force from the oxygen sensor whether the air–fuel ratio is RICH or LEAN and controls the injection time accordingly. However, if malfunction of the oxygen sensor causes output of abnormal electromotive force, the ECM is unable to perform accurate air–fuel ratio control.

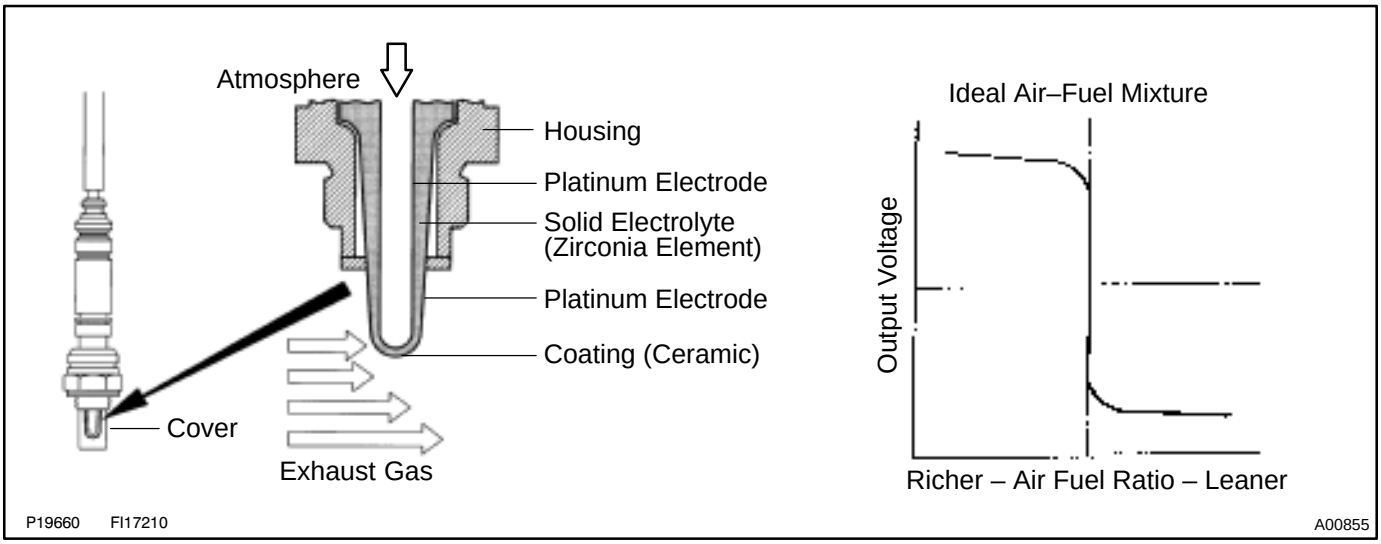

DTC No.	DTC Detecting Condition	Trouble Area
P0125	After the engine is warmed up, heated oxygen sensor (bank 1 sensor 1) output does not indicate RICH even once when conditions (a), (b), and (c) continue for at least 1.5 min. (a) Engine speed: 1,500 rpm or more (b) Vehicle speed: 40 – 100 km/h (25 – 62 mph) (c) Throttle valve does not fully closed	• Open or short in heated oxygen sensor (bank 1 sensor 1) circuit • Heated oxygen sensor (bank 1 sensor 1) • ECM

HINT:

After confirming DTC P0125, use the OBD II scan tool or TOYOTA hand−held tester to confirm voltage output of oxygen sensor from ”CURRENT DATA”.

If voltage output of oxygen sensor is 0 V, oxygen sensor circuit may be open or short.

WIRING DIAGRAM

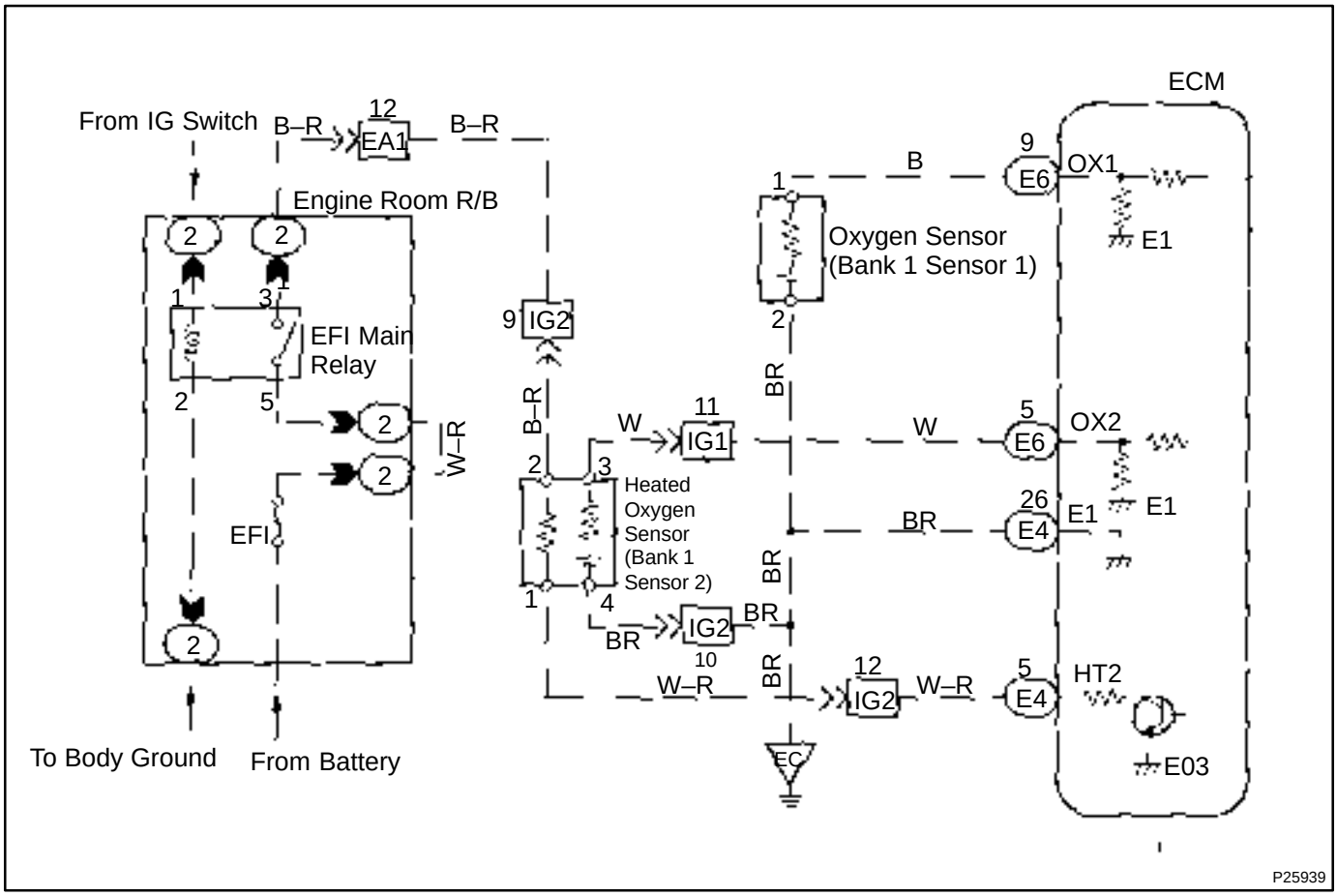

INSPECTION PROCEDURE

1	**Connect the OBD II scan tool or TOYOTA hand–held tester and read value for voltage output of oxygen sensor.**

PREPARATION:

(a) Remove the fuse cover on the instrument panel.

(b) Connect the OBD II scan tool or TOYOTA hand–held tester to the DLC3.

(c) Warm up engine to normal operating temperature.

CHECK:

Read voltage output of heated oxygen sensor (bank 1 sensor 1) when engine is suddenly raced.

HINT:

Perform quick racing to 4,000 rpm 3 times using accelerator pedal.

OK:

Oxygen sensor output a RICH signal (0.45 V or more) at least once.

OK → **Check and replace ECM (See page IN–27).**

NG

2	**Check for open and short in harness and connector between ECM and oxygen sensor (bank 1 sensor 1) (See page IN–27).**

NG → **Repair or replace harness or connector.**

OK

Replace oxygen sensor.

DTC	P0130	Oxygen Sensor Circuit Malfunction (Bank 1 Sensor 1)

CIRCUIT DESCRIPTION

Refer to ”Insufficient Coolant Temp. for Closed Loop Fuel Control” on page DI–41.

DTC No.	DTC Detecting Condition	Trouble Area
P0130	Voltage output of oxygen sensor remains at 0.4 V or more, or 0.55 V or less, during idling after the engine is warmed up (2 trip detection logic)	• Oxygen sensor • Fuel trim malfunction

HINT:
Sensor 1 refers to the sensor closer to the engine body.
The oxygen sensor’s output voltage and the short−term fuel trim value can be read using the OBD II scan tool or TOYOTA hand−held tester.

WIRING DIAGRAM

Refer to page DI–41 for the WIRING DIAGRAM.

CONFIRMATION DRIVING PATTERN

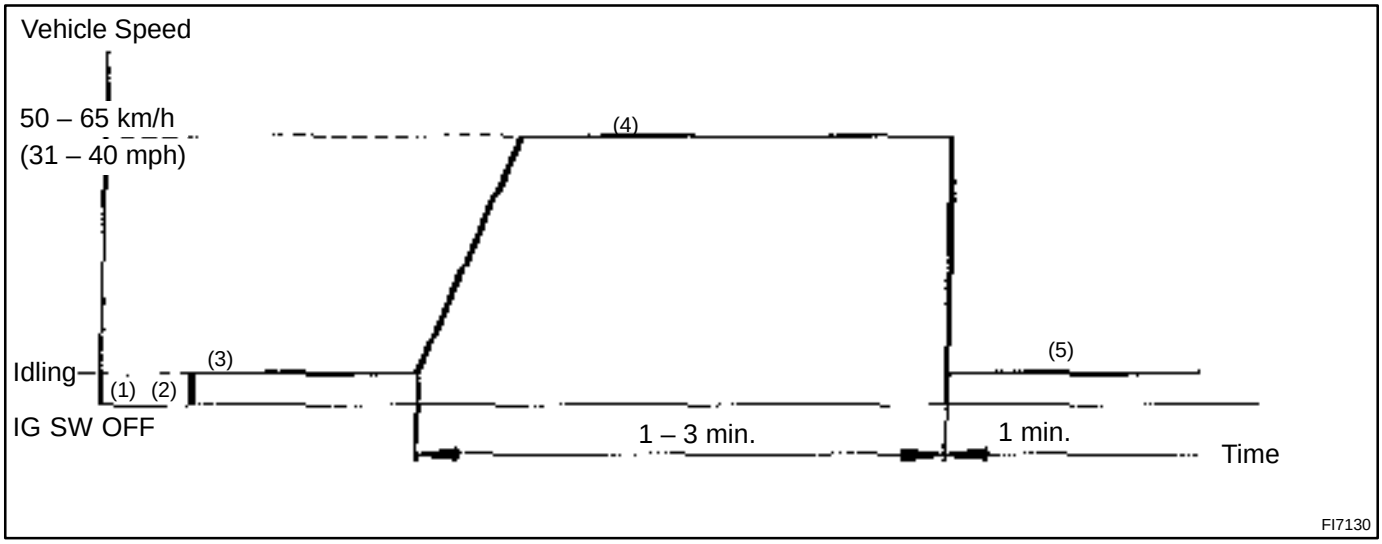

(1) Connect the TOYOTA hand–held tester to the DLC3.
(2) Switch the TOYOTA hand–held tester from normal mode to check mode (See page DI–3).
(3) Start the engine and warm it up with all accessory switches OFF.
(4) Drive the vehicle at 50 – 65 km/h (31 – 40 mph) for 1 – 3 min. to warm up the oxygen sensor.
(5) Idle the engine for 1 min.
HINT:
If a malfunction exists, the MIL will light up during step (5).
NOTICE:
If the conditions in this test are not strictly followed, detection of the malfunction will not be possible.
If you do not have a TOYOTA hand–held tester, turn the ignition switch OFF after performing steps (3) to (5), then perform steps (3) to (5) again.

INSPECTION PROCEDURE

1	**Check for open and short in harness and connector between ECM and oxygen sensor (See page IN–27).**

NG → **Repair or replace harness or connector.**

OK

2	**Check for oxygen sensor data.**

PREPARATION:

(a) Remove the fuse cover on the instrument panel.
(b) Connect the OBD II scan tool or TOYOTA hand–held tester to the DLC3.
(c) Warm up engine to normal operating temp.

CHECK:

Read the oxygen sensor output voltage and short–term fuel trim.

RESULT:

Pattern	Oxygen sensor output voltage	Short–term fuel trim
1	Lean condition (Changes at 0.55 V or less)	Changes at about + 20 %
2	RIch condition (Changes at 0.4 V or more)	Changes at about – 20 %
3	Except 1 and 2	

1, 2 → **Check fuel trim system (See page DI–51).**

3

3	**Check output voltage of oxygen sensor during idling.**

PREPARATION:

Warm up the oxygen sensor the engine at 2,500 rpm for approx. 90 sec.

CHECK:

Use the OBD II scan tool or TOYOTA hand–held tester read the output voltage of the oxygen sensor during idling.

OK:

Oxygen sensor output voltage:

Alternates repeatedly between approx. 0.4 V and approx. 55 V (See these table):

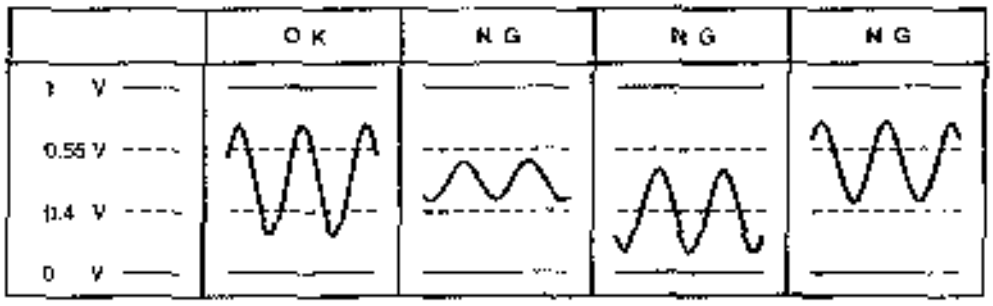

P18349

OK → **Perform confirmation driving pattern (See page DI–44).**

NG

Replace oxygen sensor.

DI4NX–01

DTC	P0133	Oxygen Sensor Circuit Slow Response (Bank 1 Sensor 1)

CIRCUIT DESCRIPTION

Refer to ”Insufficient Coolant Temp. for Closed Loop Fuel Control” on page DI–41.

DTC No.	DTC Detecting Condition	Trouble Area
P0133	Response time for the oxygen sensor’s voltage output to change from rich to lean, or from lean to rich, is 1 sec. or more during idling after the engine is warmed up (2 trip detection logic)	• Oxygen sensor

HINT:
Sensor 1 refers to the sensor closer to the engine body.

INSPECTION PROCEDURE

1	**Are there any other codes (besides DTC P0133) being output?**

YES → **Go to relevant DTC chart.**

NO

Replace oxygen sensor.

DI4NY–01

DTC	P0136	Heated Oxygen Sensor Circuit Malfunction (Bank 1 Sensor 2)

CIRCUIT DESCRIPTION

Refer to ”Insufficient Coolant Temp. for Closed Loop Fuel Control” on page DI–41.

DTC No.	DTC Detecting Condition	Trouble Area
P0136	Voltage output of the heated oxygen sensor (bank 1 sensor 2) remains at 0.4 V or more or 0.5 V or less when the vehicle is driven at 50 km/h (31 mph) or more after the engine is warmed up. (2 trip detection logic).	• Heated oxygen sensor

HINT:
Sensor 2 refers to the sensor farther away from the engine body.

WIRING DIAGRAM

Refer to page DI–41 for the WIRING DIAGRAM.

INSPECTION PROCEDURE

1	**Are there any other codes (besides DTC P0136) being output?**

YES → **Go to relevant DTC chart.**

NO

2	**Check for open and short in harness and connector between ECM and heated oxygen sensor (See page IN–27).**

NG → **Repair or replace harness or connector.**

OK

3	**Check output voltage of heated oxygen sensor (bank 1 sensor 2).**

PREPARATION:

(a) Remove the fuse cover on the instrument panel.
(b) Connect the OBD II scan tool or TOYOTA hand–held tester to the DLC3.
(c) After warm up the engine, race the engine at 2,500 rpm for 3 minutes.

CHECK:

Read the output voltage of heated oxygen sensor (bank 1 sensor 2) when racing the engine after 3 minutes have elapsed.

OK:

Heated oxygen sensor output voltage: Alternates from 0.4 V or less to 0.5 V or more.

OK → **Check that each connector is properly connected.**

NG

Replace heated oxygen sensor.

DTC	P0141	Heated Oxygen Sensor Heater Circuit Malfunction (Bank 1 Sensor 2)

CIRCUIT DESCRIPTION

Refer to ”Insufficient Coolant Temp. for Closed Loop Fuel Control” on page DI–41.

DTC No.	DTC Detecting Condition	Trouble Area
P0141	When the heater operates, heater current exceeds 2 A (2 trip detection logic)	• Open or short in heater circuit of heated oxygen sensor • Heated oxygen sensor heater • ECM
	Heater current of 0.25 A or less when the heater operates (2 trip detection logic)	

WIRING DIAGRAM

Refer to page DI–41 for the WIRING DIAGRAM.

INSPECTION PROCEDURE

1	Check voltage between terminals HT1, HT2 of ECM connector and body ground.

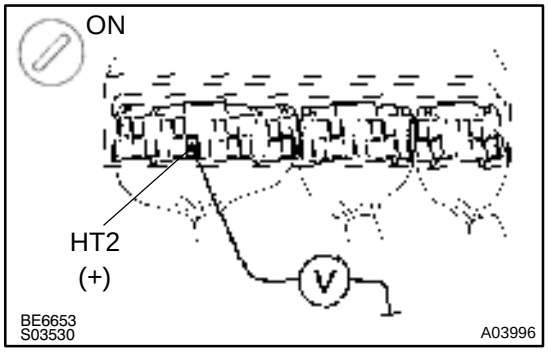

PREPARATION:

(a) Remove the lower finish panel.

(b) Turn ignition switch ON.

CHECK:

Measure voltage between terminals HT2 of ECM connector and body ground.

OK:

Voltage: 9 – 14 V

OK	Check and replace ECM (See page IN–27).

NG

2	Check resistance of heated oxygen sensor heater (See page SF–55).

NG	Replace heated oxygen sensor.

OK

Check and repair harness or connector between EFI main relay and heated oxygen sensor and ECM.

DI4O0–01

DTC	P0171	System too Lean (Fuel Trim)

DTC	P0172	System too Rich (Fuel Trim)

CIRCUIT DESCRIPTION

”Fuel trim” refers to the feedback compensation value compared against the basic injection time. Fuel trim includes short–term fuel trim and long–term fuel trim.

”Short–term fuel trim” is the short–term fuel compensation used to maintain the air–fuel ratio at its ideal theoretical value. The signal from the oxygen sensor indicates whether the air–fuel ratio is RICH or LEAN compared to the ideal theoretical value, triggering a reduction in fuel volume if the air–fuel ratio is rich, and an increase in fuel volume if it is lean.

”Long–term fuel trim” is overall fuel compensation carried out long–term to compensate for continual deviation of the short–term fuel trim form the central value due to individual engine differences, wear over time and changes in the usage environment.

If both the short–term fuel trim and long–term fuel trim are LEAN or RICH beyond a certain value, it is detected as a malfunction and the MIL lights up.

DTC No.	DTC Detecting Condition	Trouble Area
P0171	When the air fuel ratio feedback is stable after engine warming up, the fuel trim is considerably in error on the RICH side (2 trip detection logic)	• Air intake (hose loose) • Fuel line pressure • Injector blockage • Oxygen sensor malfunction • Manifold absolute pressure sensor • Engine coolant temp. sensor
P0172	When the air–fuel ratio feedback is stable after engine warming up, the fuel trim is considerably in error on the LEAN side. (2 trip detection logic)	• Fuel line pressure • Injector blockage, leak • Oxygen sensor malfunction • Manifold absolute pressure sensor • Engine coolant temp. sensor

HINT:

- When DTC P0171 is recorded, the actual air–fuel ratio is on the LEAN side. When DTC P0172 is recorded, the actual air–fuel ratio is on the RICH side.
- If the total of the short–term fuel trim value and long–term fuel trim value is within ±25 %, the system is functioning normally.
- If the vehicle runs out of fuel, the air–fuel ratio is LEAN and DTC P0171 is recorded. The MIL then comes on.

INSPECTION PROCEDURE

1	**Check air induction system (See page SF–1).**

NG → **Repair or replace.**

OK

2	**Check for oxygen sensor data.**

PREPARATION:

(a) Remove the fuse cover on the instrument panel.
(b) Connect the OBD II scan tool or TOYOTA hand–held tester to the DLC3.
(c) Warm up engine to normal operating temp.

CHECK:

Read the oxygen sensor output voltage and short–term fuel trim.
HINT:
Read the values for the same bank.

RESULT:

Pattern	Oxygen sensor output voltage	Short–term fuel trim
1	Lean condition (Changes at 0.55 V or less)	Changes at about + 20 %
2	Rich condition (Changes at 0.4 V or more)	Changes at about – 20 %
3	Except 1 and 2	

3 → **Check for oxygen sensor (See page DI–44).**

1, 2

3	**Check fuel pressure (See page SF–1).**

NG → **Check and repair fuel pump, pressure regulator, fuel pipe line and filter. (See page SF–5)**

OK

4	Check injector injection (See page SF–19).

NG → Replace injector.

OK

5	Check manifold absolute pressure sensor and engine coolant temp. sensor (See page SF–48, SF–44).

NG → Repair or replace.

OK

6	Check for spark and ignition (See page IG–1).

NG → Repair or replace.

OK

Check and replace ECM (See page IN–27).

DI4O1–01

DTC	P0300	Random/Multiple Cylinder Misfire Detected

DTC	P0301	Cylinder 1 Misfire Detected

DTC	P0302	Cylinder 2 Misfire Detected

DTC	P0303	Cylinder 3 Misfire Detected

DTC	P0304	Cylinder 4 Misfire Detected

CIRCUIT DESCRIPTION

Misfire: The ECM uses the crankshaft position sensor and camshaft position sensor to monitor changes in the crankshaft rotation for each cylinder.

The ECM counts the number of times the engine speed change rate indicates that misfire has occurred. And when the misfire rate equals or exceeds the count indicating that the engine condition has deteriorated, the MIL lights up.

If the misfire rate is high enough and the driving conditions will cause catalyst overheating, the MIL blinks when misfiring occurs.

DTC No.	DTC Detecting Condition	Trouble Area
P0300	Misfiring of random cylinders is detected during any particular 200 or 1,000 revolutions	• Ignition system • Injector • Fuel line pressure • Compression pressure • Valve clearance not to specification • Valve timing • Manifold absolute pressure sensor • Engine coolant temp. sensor
P0301 P0302 P0303 P0304	For any particular 200 revolutions of the engine, misfiring is detected which can cause catalyst overheating (This causes MIL to blink)	
	For any particular 1,000 revolutions of the engine, misfiring is detected which causes a deterioration in emissions (2 trip detection logic)	

HINT:

When the 2 or more codes for a misfiring cylinder are recorded repeatedly but no Random Misfire code is recorded, it indicates that the misfires were detected and recorded at different times.

WIRING DIAGRAM

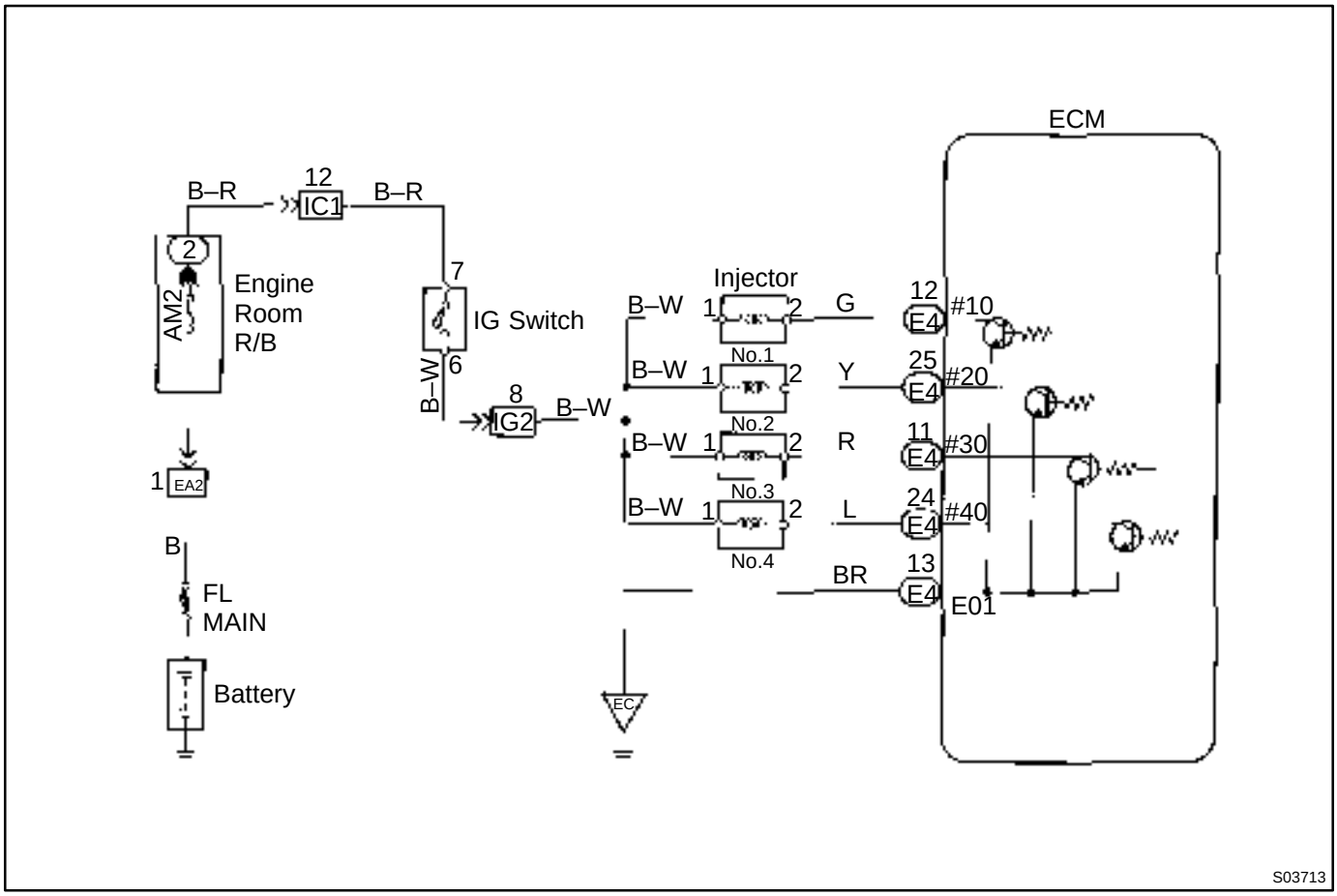

Reference: INSPECTION USING OSCILLOSCOPE

INJECTOR SIGNAL WAVEFORM

With the engine idling, measure between terminals #10, #20, #30, #40 and E01 of ECM.

HINT:

The correct waveform is as shown.

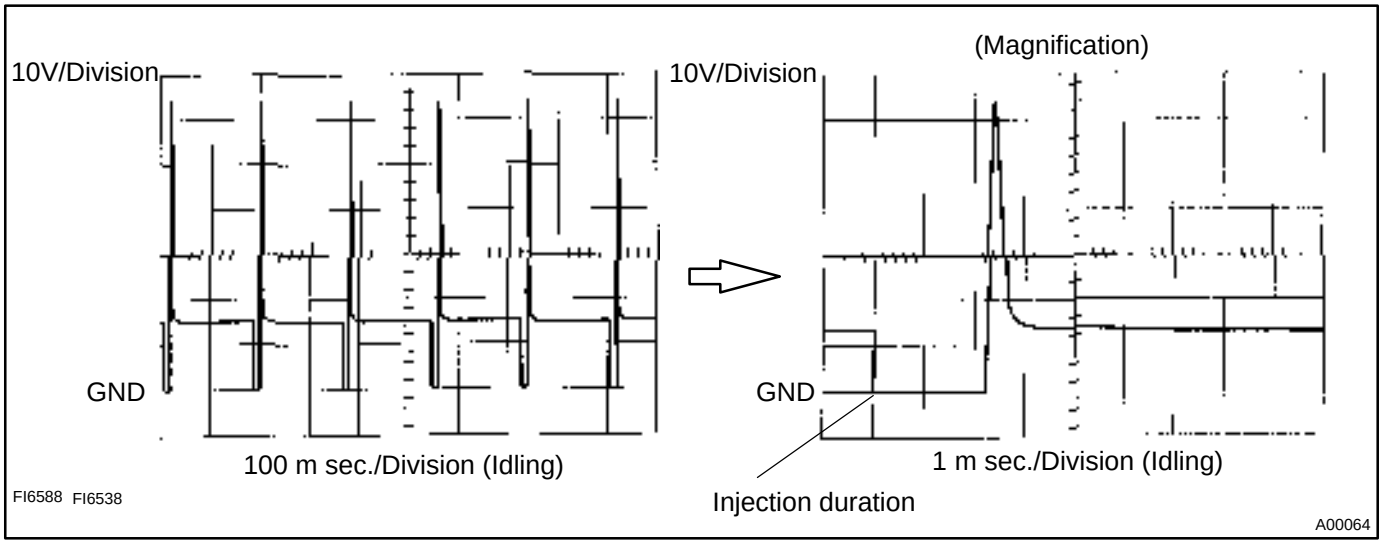

INSPECTION PROCEDURE

1	**Check spark plug and spark of misfiring cylinder.**

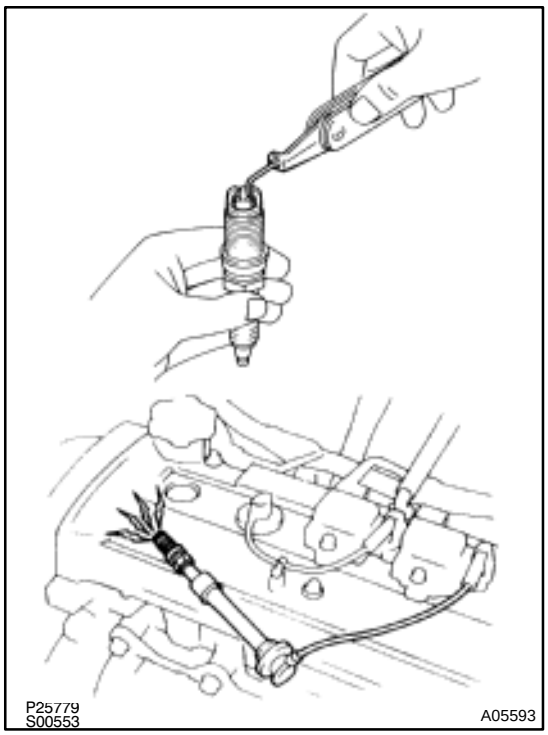

PREPARATION:

(a) Disconnect the high–tension cord or ignition coil.

(b) Remove the spark plug.

CHECK:

(a) Check plug type.

(b) Check for carbon deposits on electrode.

(c) Check electrode gap.

OK:

(1) Twin ground electrodes type.
Recommended spark plug:
ND: K16TR11
NGK: BKR5EKB–11
(2) No large carbon deposit present.
Not wet with gasoline or oil.
(3) Electrode gap: 1.0 – 1.1 mm (0.039 – 0.043 in.).

PREPARATION:

(a) Install the spark plug to the high–tension code or ignition coil.

(b) Disconnect injector connector.

(c) Hold the end about 12.5 mm (0.5 in.) from the ground.

CHECK:

Check if spark occurs while engine is being cracked.

NOTICE:

To prevent excess fuel being injected from the injectors during this test, don't crank the engine for more than 5 – 10 seconds at a time.

OK:

Spark jumps across electrode gap.

NG → **Replace or check ignition system (See page IG–1).**

OK

2	Check voltage of ECM terminal for injector of failed cylinder.

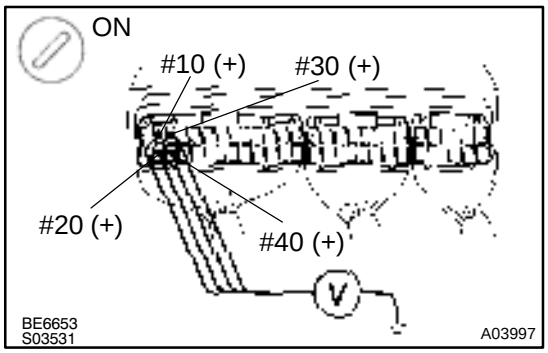

PREPARATION:

(a) Remove the lower finish panel.

(b) Turn ignition switch ON.

CHECK:

Measure voltage between applicable terminal of ECM connector and body ground.

OK:

Voltage: 9 – 14 V

OK → **Go to step 4.**

NG

3	Check injector resistance of misfiring cylinder (See page SF–16).

NG → **Replace injector.**

OK

Check for open and short in harness and connector between injector and ECM (See page IN–27).

4	Check fuel pressure (See page SF–1).

NG → **Check and repair fuel pump, pressure regulator, fuel pipe line and filter (See page SF–5).**

OK

5	Check injector injection (See page SF–19).

NG → Replace injector.

OK

6	Check manifold absolute pressure sensor and engine coolant temp. sensor (See page SF–48, SF–44).

NG → Repair or replace.

OK

Check the compression pressure (See page EM–3), valve clearance (See page EM–5) and valve timing (See page EM–18).

DI4O2–01

DTC	P0325	Knock Sensor 1 Circuit Malfunction

CIRCUIT DESCRIPTION

A knock sensor is fitted to the cylinder block to detect engine knocking. This sensor contains a piezoelectric element which generates a voltage when it becomes deformed, which occurs when the cylinder block vibrates due to knocking. If engine knocking occurs, ignition timing is retarded to suppress it.

DTC No.	DTC Detecting Condition	Trouble Area
P0325	No knock sensor 1 signal to ECM with engine speed, 1,200 rpm or more (2 trip detection logic)	• Open or short in knock sensor 1 circuit • Knock sensor 1 (looseness) • ECM

HINT:

If the ECM detects the above diagnosis conditions, it operates the fail safe function in which the corrective retard angle value is set to the maximum value.

WIRING DIAGRAM

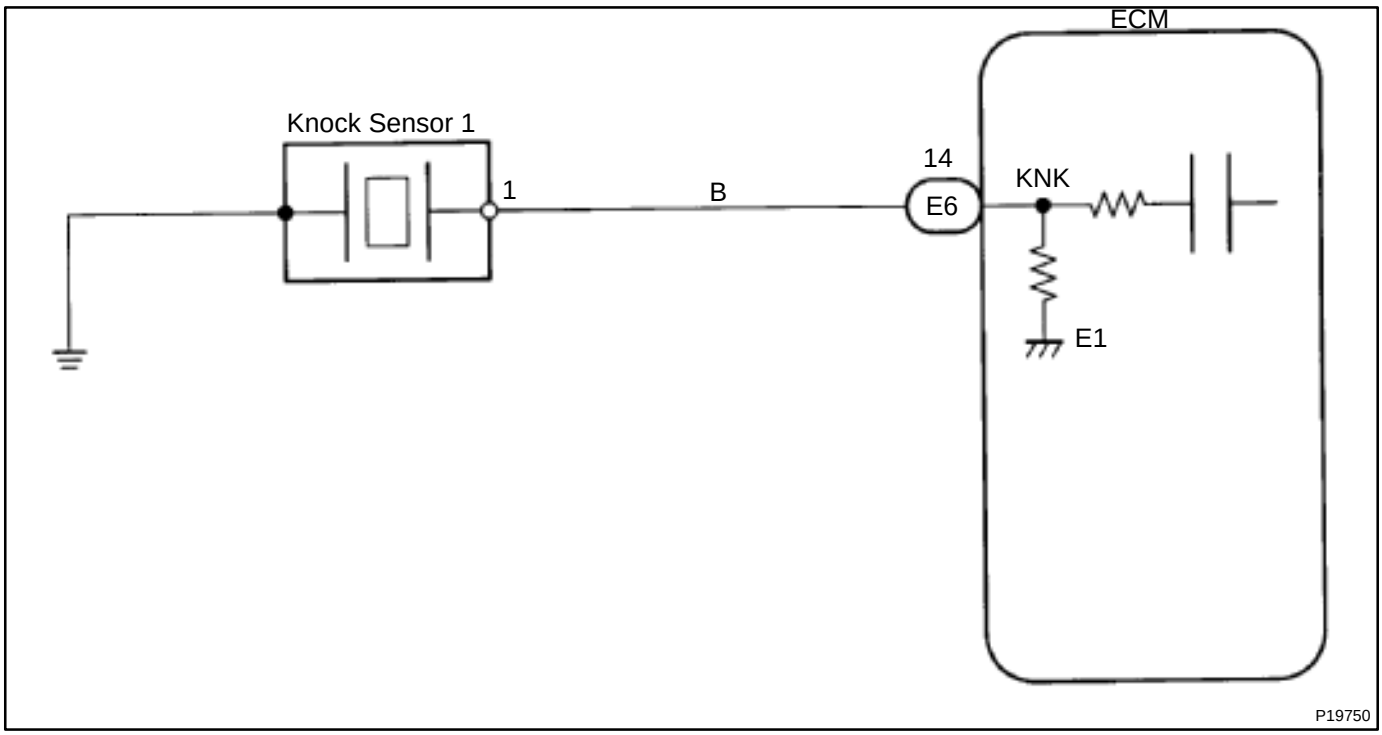

INSPECTION PROCEDURE

1	**Check continuity between terminal KNK of ECM connector and body ground.**

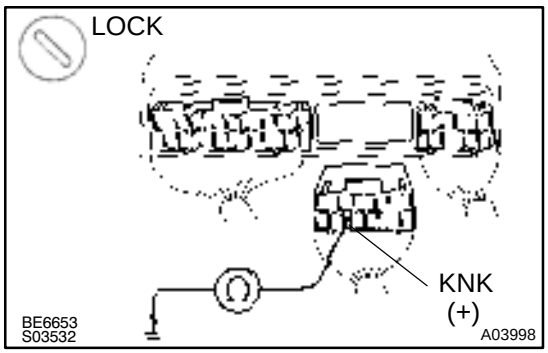

PREPARATION:

(a) Remove the lower finish panel.

(b) Disconnect the "E6" connector of ECM.

CHECK:

Measure resistance between terminal KNK of ECM connector and body ground.

OK:

Resistance: 1 MΩ or higher

OK → **Go to step 3.**

NG

2	**Check knock sensor (See page SF–52).**

NG → **Replace knock sensor.**

OK

3	**Check for open and short in harness and connector between ECM and knock sensor (See page IN–27).**

NG → **Repair or replace harness or connector.**

OK

4	**Does malfunction disappear when a good knock sensor is installed?**

YES → **Replace knock sensor.**

NO

Check and replace ECM (See page IN–27).

Reference: INSPECTION USING OSCILLOSCOPE

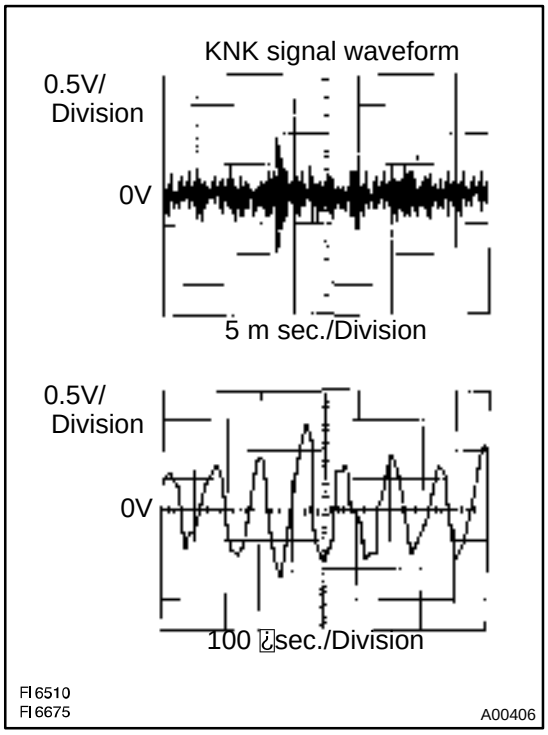

- With the engine racing (4,000 rpm) measure between terminal KNK of ECM and body ground.

HINT:
The correct waveform is as shown.

- Spread the time on the horizontal axis, and confirm that period of the wave is 123 µ sec.
  (Normal mode vibration frequency of knock sensor: 8.1 kHz)

HINT:
If normal mode vibration frequency is not 8.1 kHz, the sensor is malfunctioning.

DI4O3–01

DTC	P0335	Crankshaft Position Sensor ”A” Circuit Malfunction

CIRCUIT DESCRIPTION

Crankshaft position sensor (NE signal) consist of a signal plate and pick up coil.
The NE signal plate has 34 teeth and is mounted on the crankshaft. The NE signal sensor generates 34 signals of every engine revolution. The ECM detects the standard crankshaft angle based on the G signals, and the actual crankshaft angle the engine speed by the NE signals.

DTC No.	DTC Detecting Condition	Trouble Area
P0335	No crankshaft position sensor signal to ECM during cranking. (2 trip detection logic)	• Open or short in crankshaft position sensor circuit. • Crankshaft position sensor • Starter • ECM
	No crankshaft position sensor signal to ECM with engine speed 600 rpm or more (2 trip detection logic)	

WIRING DIAGRAM

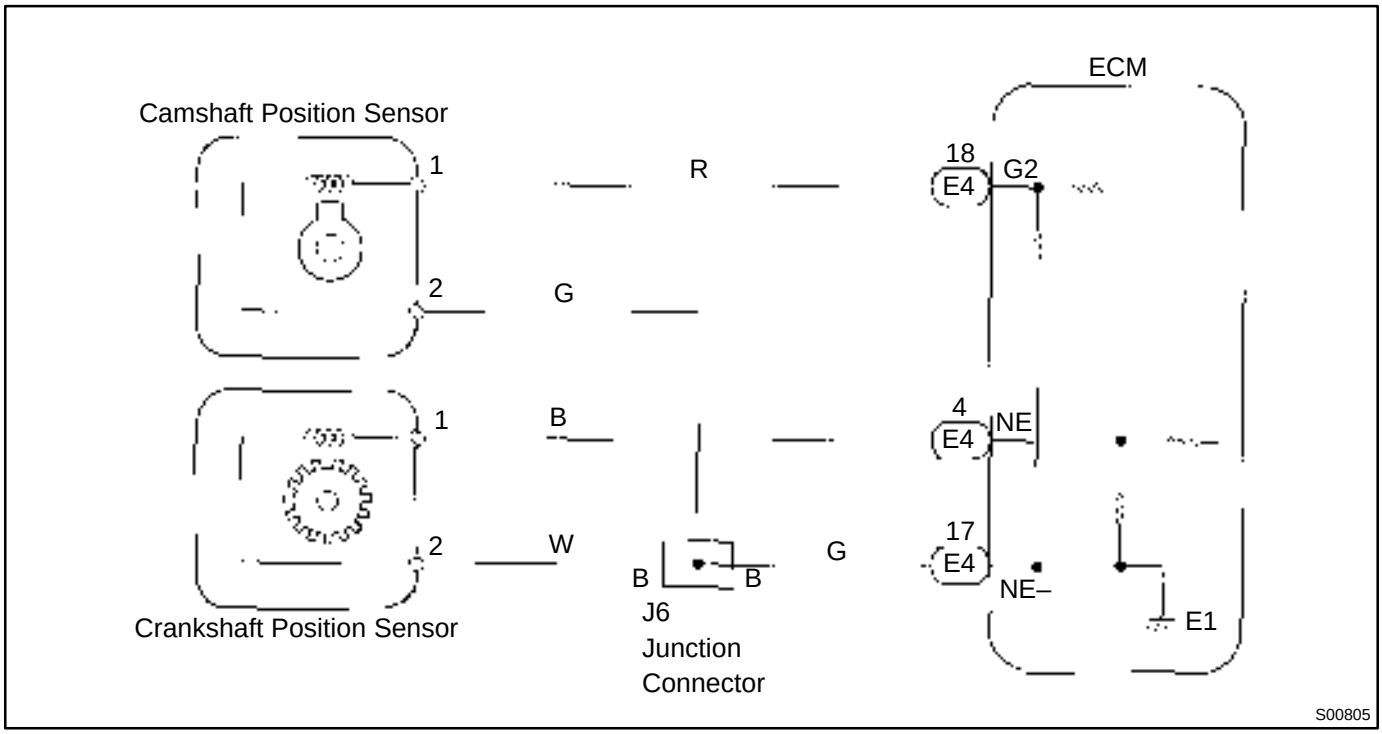

INSPECTION PROCEDURE

1	**Check resistance of crankshaft position sensor (See page IG–1).**

Reference: INSPECTION USING OSCILLOSCOPE

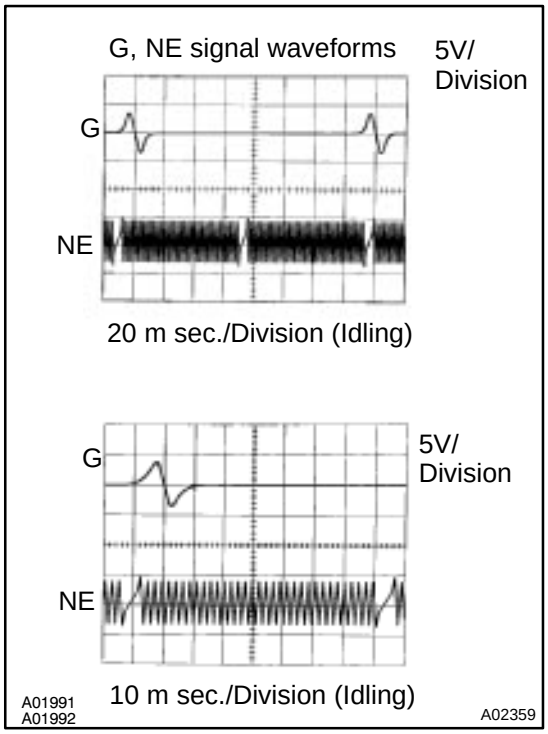

- During cranking or idling, check between terminals G2, NE and NE– of ECM.

HINT:
The correct waveforms are as shown.

NG → **Replace crankshaft position sensor.**

OK

2	**Check for open and short in harness and connector between ECM and crankshaft position sensor (See page IN–27).**

NG → **Repair or replace harness or connector.**

OK

3	**Inspect sensor installation and teeth of signal plate.**

NG → **Tighten the sensor.**
Replace signal plate.

OK

Check and replace ECM (See page IN–27).

DTC	P0340	Camshaft Position Sensor Circuit Malfunction

CIRCUIT DESCRIPTION

Camshaft position sensor (G signal) consist of signal plate and pick up coil.
The G signal plate has one tooth on its outer circumference and is mounted on the exhaust camshaft. When the camshafts rotate, the protrusion on the signal plate and the air gap on the pickup coil change, causing fluctuations in the magnetic field and generating an electromotive force in the pickup coil.
The NE signal plate has 34 teeth and is mounted on the crankshaft. The NE signal sensor generates 34 signals for every engine revolution. The ECM detects the standard crankshaft angle based on the G signals and the actual crankshaft angle and the engine speed by the NE signals.

DTC No.	DTC Detecting Condition	Trouble Area
P0340	No camshaft position sensor signal to ECM during cranking. (2 trip detection logic)	• Open or short in camshaft position sensor circuit • Camshaft position sensor • Starter • ECM
	No camshaft position sensor signal to ECM with engine speed 600 rpm or more	

WIRING DIAGRAM

Refer to DI–62 for the WIRING DIAGRAM.

INSPECTION PROCEDURE

1	**Check resistance of camshaft position sensor (See page IG–1).**

Reference: INSPECTION USING OSCILLOSCOPE
Refer to page DI–62 for the WIRING DIAGRAM.

NG → **Replace camshaft position sensor.**

OK

2	**Check for open and short in harness and connector between ECM and camshaft position sensor (See page IN–27).**

NG → **Repair or replace harness or connector.**

OK

3	**Inspect sensor installation.**

NG → **Tighten the sensor.**

OK

Check and replace ECM (See page IN–27).

DI4O5–01

DTC	P0420	Catalyst System Efficiency Below Threshold

CIRCUIT DESCRIPTION

The ECM compares the waveform of the oxygen sensor located before the catalyst with the waveform of the oxygen sensor located after the catalyst to determine whether or not catalyst performance has deteriorated.

Air–fuel ratio feedback compensation keeps the waveform of the oxygen sensor before the catalyst repeatedly changing back and forth from rich to lean.

If the catalyst is functioning normally, the waveform of the oxygen sensor after the catalyst switches back and forth between rich and lean much more slowly than the waveform of the oxygen sensor before the catalyst.

But when both waveforms change at a similar rate, it indicates that catalyst performance has deteriorated.

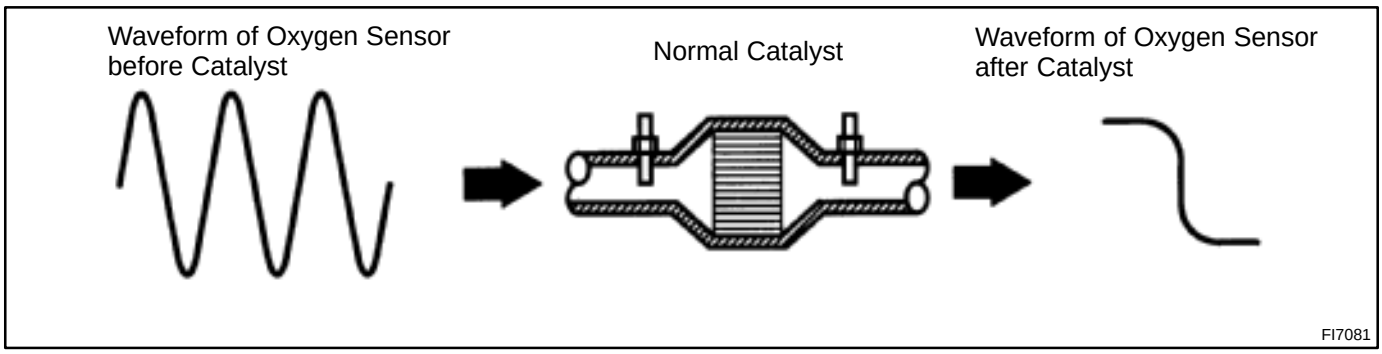

DTC No.	DTC Detecting Condition	Trouble Area
P0420	After the engine and the catalyst are warmed up, and while vehicle is driven within the set vehicle and engine speed range, the waveforms of the oxygen sensors (bank 1 sensor 1) and heated oxygen sensor (bank 1 sensor 2) have the same amplitude (2 trip detection logic)	• Three–way catalytic converter • Open or short in (heated) oxygen sensor circuit • (Heated) oxygen sensor

CONFIRMATION ENGINE RACING PATTERN

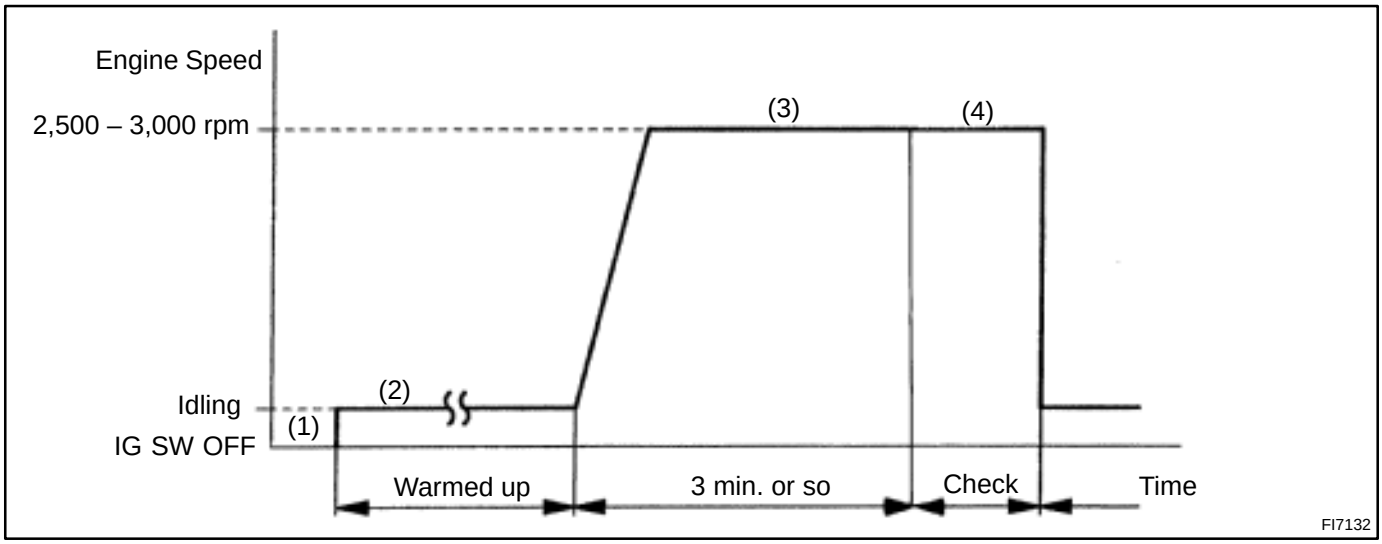

(1) Connect the TOYOTA hand–held tester to the DLC3, or connect the probe of the oscilloscope between terminals OX1, OX2 and E1 of ECM.
(2) Start engine and warm it up with all accessories switched OFF until engine coolant temperature is stable.
(3) Race the engine at 2,500 – 3,000 rpm for about 3 min.
(4) After confirming that the waveforms of the oxygen sensor, bank 1 sensor 1 (OX1), oscillates around 0.5 V during feedback to the ECM, check the waveform of the heated oxygen sensor, bank 1 sensor 2 (OX2).

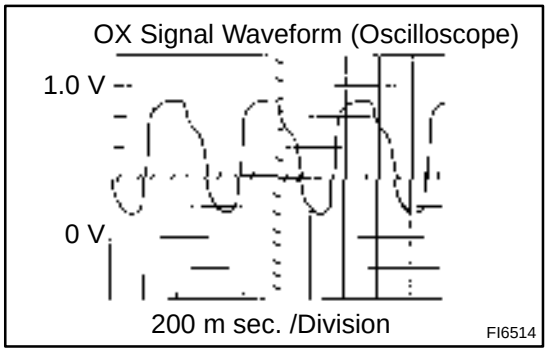

HINT:
If there is a malfunction in the system, the waveform of the heated oxygen sensor, bank 1 sensor 2 (OX2), is almost the same as that of the oxygen sensor, bank 1 sensor 1 (OX1), on the left.
There are some cases where, even though a malfunction exists, the MIL may either light up or not light up.

INSPECTION PROCEDURE

1	**Are there any other codes (besides DTC P0420) being output?**

YES → **Go to relevant DTC chart.**

NO

2	Check oxygen sensor (bank 1 sensor 1) (See page DI–44).

NG → Repair or replace.

OK

3	Check heated oxygen sensor (bank 1 sensor 2) (See page DI–47).

NG → Repair or replace.

OK

Replace three–way catalytic converter.

DI4O6–01

DTC	P0440	Evaporative Emission Control System Malfunction

CIRCUIT DESCRIPTION

The vapor pressure sensor and VSV for vapor pressure sensor are used to detect abnormalities in the evaporative emission control system.
The ECM decides whether there is an abnormality in the evaporative emission control system based on the vapor pressure sensor signal.
DTC P0440 is recorded by the ECM when evaporative emissions leak from the components within the dotted line in fig. 1 below, or when the vapor pressure sensor malfunctions.

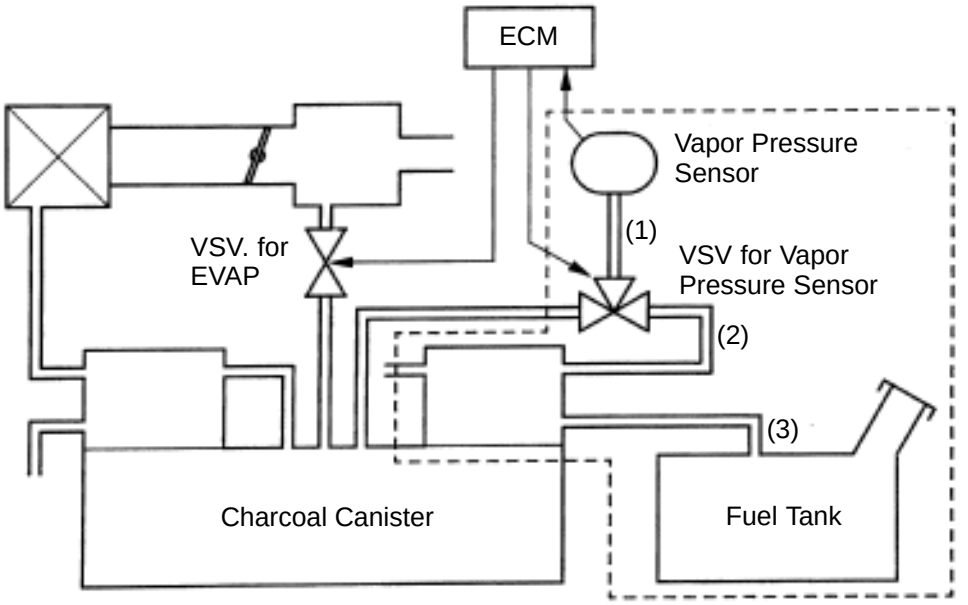

fig.1

S00043

DTC No.	DTC Detecting Condition	Trouble Area
P0440	The fuel tank pressure is atmospheric pressure after the vehicle is driven for 20 min. (2 trip detection logic)	• Vapor pressure sensor • Fuel tank cap incorrectly installed • Fuel tank cap cracked or damaged • Vacuum hose cracked, holed, blocked, damaged, or disconnected ((1) or (2) in fig. 1) • Hose or tube cracked, holes, damaged or loose ((3) in fig. 1) • Fuel tank cracked, holed or damaged • Charcoal canister cracked, holed or damaged

WIRING DIAGRAM

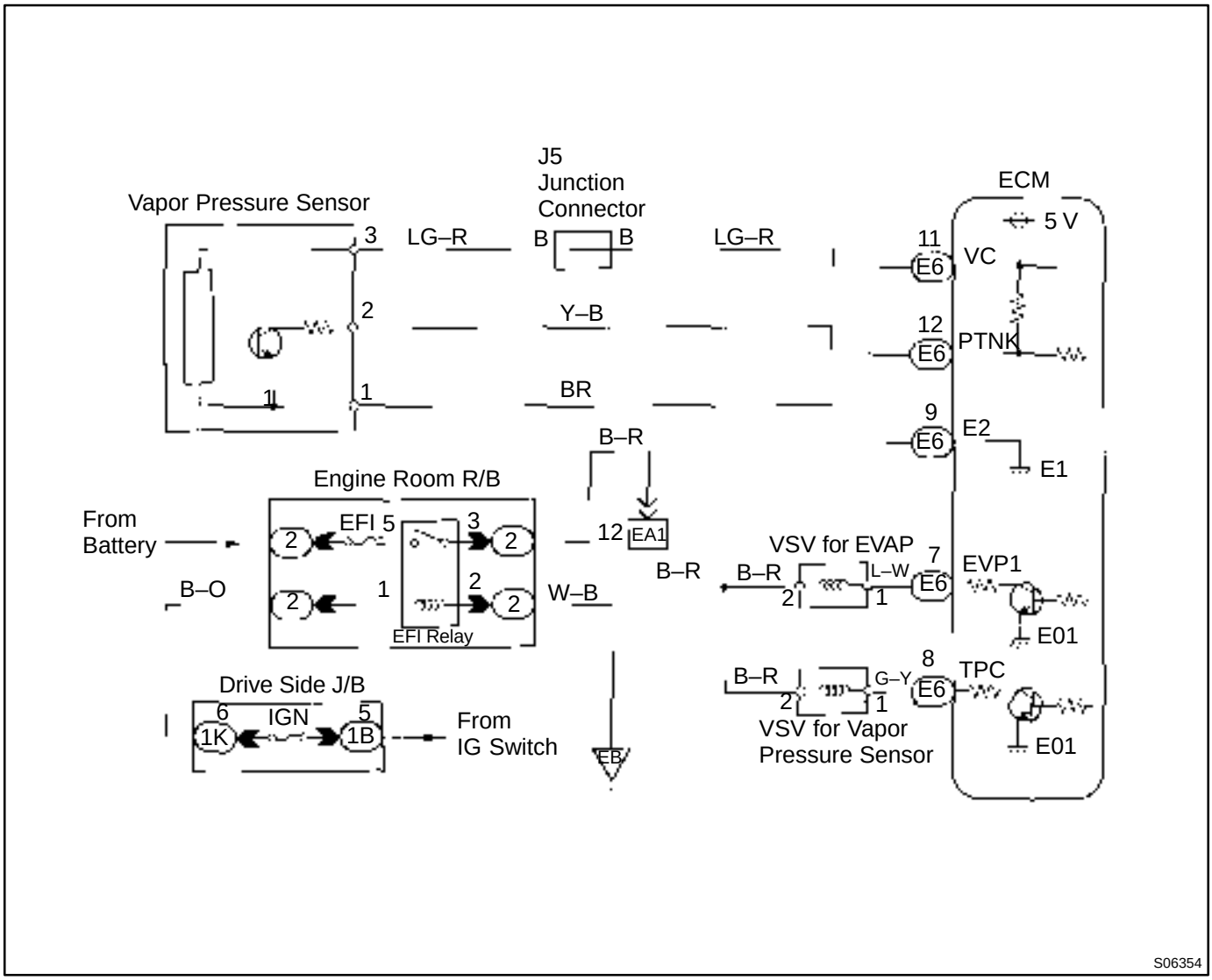

INSPECTION PROCEDURE

HINT:

- If DTC P0441, P0446 or P0450 is output after DTC P0440, first troubleshoot DTC P0441, P0446 or P0450. If no malfunction is detected, troubleshoot DTC P0440 next.
- Ask the customer whether, after the MIL came on, the customer found the fuel tank cap loose and tightened it. Also ask the customer whether the fuel tank cap was loose when refuelling.
  If the fuel tank cap was loose, it was the cause of the DTC. If the fuel tank cap was not loose or if the customer was not sure if it was loose, troubleshoot according to the following procedure.

1	**Check whether the hoses close to the fuel tank have been modified, and check whether there are signs of any accident near fuel tank or charcoal canister.**

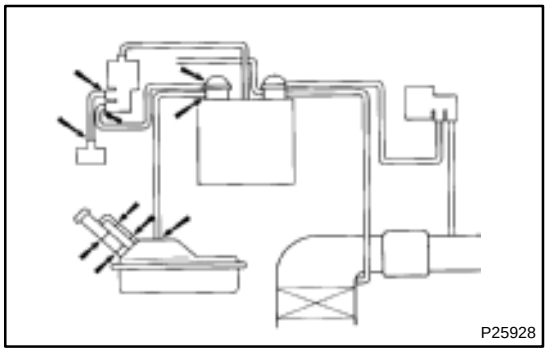

CHECK:

Check for cracks, deformation and loose connection of the these parts:

- Fuel tank
- Charcoal canister
- Fuel tank filler pipe
- Hoses and tubes around the fuel tank and charcoal canister

NG → **Repair or replace.**

OK

2	**Check that the fuel tank cap is TOYOTA genuine parts.**

NG → **Replace to TOYOTA genuine parts.**

OK

3	**Check that fuel tank cap is correctly installed.**

NG → **Correctly install the fuel tank cap.**

OK

4	**Check the fuel tank cap (See page EC–5).**

NG → **Replace fuel tank cap.**

OK

5	**Check filler neck for damage.**

PREPARATION:
Remove the fuel tank cap.
CHECK:
Visually inspect the filler neck for damage.

NG → **Replace the filler neck.**

OK ↓

6	**Check vacuum hoses between vapor pressure sensor and VSV for vapor pressure sensor, and VSV for vapor pressure sensor and charcoal canister.**

CHECK:
(a) Check that the vacuum hose is connected correctly.
(b) Check the vacuum hose for looseness and disconnection.
(c) Check the vacuum hose for cracks, hole and damage.

NG → **Repair or replace.**

OK ↓

7	**Check hose and tube between fuel tank and charcoal canister.**

CHECK:
(a) Check for proper connection of the fuel tank and fuel EVAP pipe (See page EC–5), fuel EVAP pipe and fuel tube under the floor, fuel tube under the floor and charcoal canister.
(b) Check the hose and tube for cracks, hole and damage.

NG → **Repair or replace.**

OK ↓

8	**Check charcoal canister for cracks, hole and damage (See page EC–5).**

NG → **Replace charcoal canister.**

OK ↓

9	Check voltage between terminals VC and E2 of ECM connector.

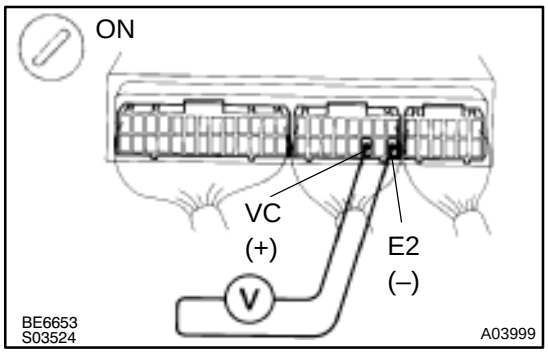

CHECK:

(a) Remove the lower finish panel.

(b) Turn ignition switch ON.

CHECK:

Measure voltage between terminals VC and E2 of ECM connector.

OK:

Voltage: 4.5 – 5.5 V

NG	Check and replace ECM (See page IN–27).

OK

10	Check voltage between terminals PTNK and E2 ECM connector.

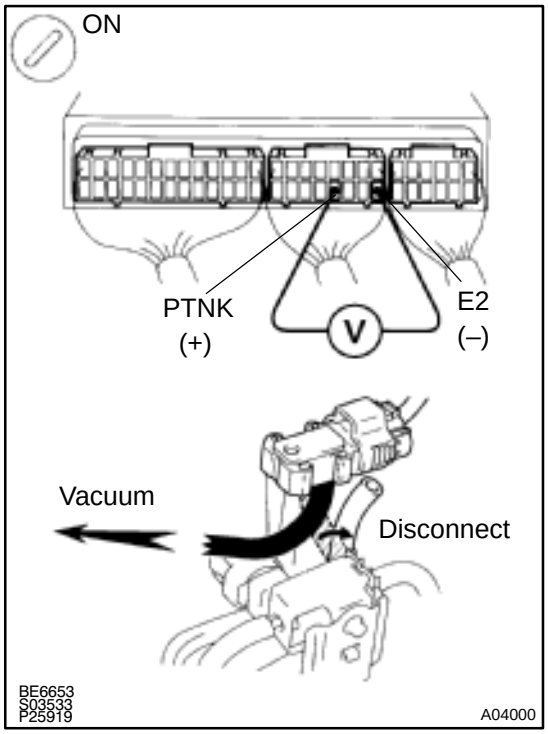

PREPARATION:

(a) Remove the lower finish panel.

(b) Turn ignition switch ON.

CHECK:

Measure voltage between terminals PTNK and E2 of ECM connector.

(1) Disconnect the vacuum hose from the vapor pressure sensor.

(2) Using the MITYVAC (Hand–Held Vacuum Pump), apply vacuum (4.0 kPa, 30 mmHg, 1.18 in.Hg) to the vapor pressure sensor.

NOTICE:

The vacuum applied to the vapor pressure sensor must be less than 66.7 kPa (500 mmHg, 19.7 in.Hg).

OK:

(1) Voltage: 2.9 – 3.7 V

(2) Voltage: 0.5 V or less

OK	Go to step 12.

NG

11	**Check for open and short in harness and connector between vapor pressure sensor and ECM (See page IN–27).**

NG → **Repair or replace harness or connector.**

OK

Replace vapor pressure sensor.

12	**Check the fuel tank for cracks and damage.**

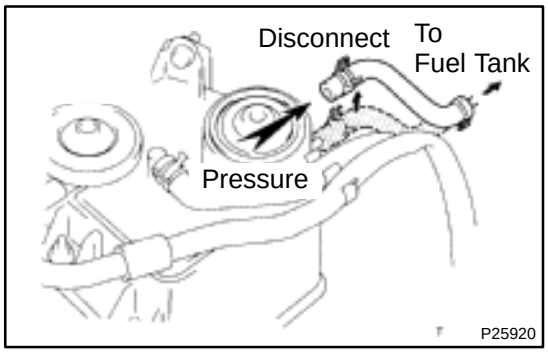

PREPARATION:

(a) Disconnect the vacuum hose from charcoal canister.
(b) Correctly install the fuel tank cap.
(c) Apply a pressure of 5 kPa (0.05 kgf/cm^2, 0.71 psi) to the fuel tank.

CHECK:

Check whether the pressure is maintained after 1 minute.

OK:

Pressure applied to the fuel tank is maintained.

NG → **Replace fuel tank.**

OK

It is likely that the vehicle user did not properly close the fuel tank cap. Please explain to the customer how to properly install fuel tank cap.

DI4O7–01

DTC	P0441	Evaporative Emission Control System Incorrect Purge Flow (Only for A/T)

DTC	P0446	Evaporative Emission Control System Vent Control Malfunction (Only for A/T)

CIRCUIT DESCRIPTION

The vapor pressure sensor and VSV for vapor pressure sensor are used to detect abnormalities in the evaporative emission control system.

The ECM decides whether there is an abnormality in the evaporative emission control system based on the vapor pressure sensor signal.

DTC P0441 and P0446 are recorded by the ECM when evaporative emissions leak from the components within the dotted line in fig. 1 below, or when there is a malfunction in either the VSV for EVAP, the VSV for vapor pressure sensor, or in the vapor pressure sensor itself.

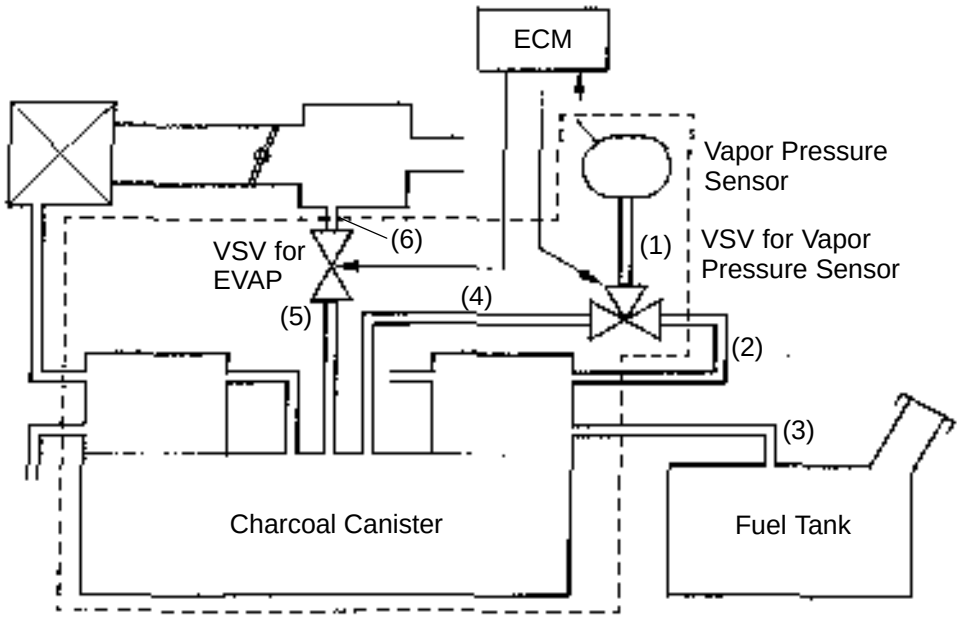

S00044

DTC No.	DTC Detecting Condition	Trouble Area
P0441	The pressure in the charcoal canister does not drop during purge control (2 trip detection logic)	• Open or short in VSV circuit for vapor pressure sensor • VSV for vapor pressure sensor • Open or short in vapor pressure sensor circuit • Vapor pressure sensor • Open or short in VSV circuit for EVAP • VSV for EVAP • Vacuum hose cracks, hole, blocked, damaged or disconnected ((1), (4), (5) and (6) in fig. 1) • Charcoal canister cracks, hole or damaged
	During purge cut–off, the pressure in the charcoal canister is very low compared with atmospheric pressure (2 trip detection logic)	
P0446	When VSV for vapor pressure sensor is OFF, ECM judges that there is no continuity between vapor pressure sensor and charcoal canister (2 trip detection logic)	
	When VSV for vapor pressure sensor is ON, ECM judges that there is no continuity between vapor pressure sensor and fuel tank (2 trip detection logic)	
	After the purge cut off operates, the pressure in the charcoal canister is maintained at atmospheric pressure (2 trip detection logic)	

WIRING DIAGRAM

Refer to Evaporative Emission Control System Malfunction on page DI–70.

INSPECTION PROCEDURE

HINT:
If DTC P0441, P0446 or P0450 is output after DTC P0440, first troubleshoot DTC P0441, P0446 or P0450.
If no malfunction is detected, troubleshoot DTC P0440 next.

TOYOTA hand–held tester

1	**Check the VSV connector for EVAP, VSV connector for vapor pressure sensor and vapor pressure sensor connector for looseness and disconnection.**

NG → **Repair or connect VSV or sensor connector.**

OK

2	**Check vacuum hose between intake manifold and VSV for EVAP, VSV for EVAP and charcoal canister, charcoal canister and VSV for vapor pressure sensor, and VSV for vapor pressure sensor and vapor pressure sensor.**

CHECK:

(a) Check that the vacuum hose is connected correctly.
(b) Check the vacuum hose for looseness and disconnection.
(c) Check the vacuum hose for cracks, hole, damage, and blockage.

NG → **Repair or replace.**

OK

3	Check voltage between terminals VC and E2 of ECM connector (See page DI–70, step 9).

NG → Check and replace ECM (See page IN–27).

OK

4	Check voltage between terminals PTNK and E2 of ECM connector (See page DI–70, step 10).

OK → Go to step 6.

NG

5	Check for open and short in harness and connector between vapor pressure sensor and ECM (See page IN–27).

NG → Repair or replace harness or connector.

OK

Replace vapor pressure sensor.

6	Check the purge flow.

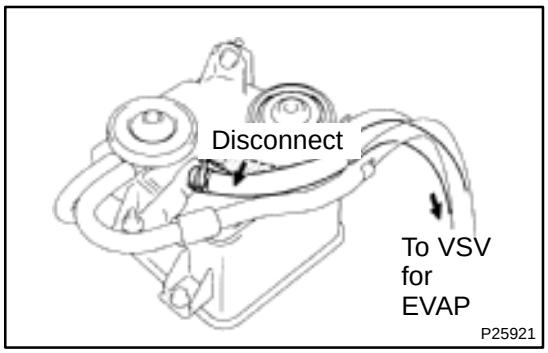

PREPARATION:

(a) Remove the fuse cover on the instrument panel.
(b) Connect the TOYOTA hand–held tester to the DLC3.
(c) Select the ACTIVE TEST mode on the TOYOTA hand–held tester.
(d) Disconnect from the charcoal canister the vacuum hose to the VSV for EVAP.
(e) Start the engine.

CHECK:

When the VSV for EVAP is operated by the TOYOTA hand–held tester, check whether the disconnected hose applies suction to your finger.

OK:

VSV is ON:
Disconnected hose applies suction to your finger.
VSV is OFF:
Disconnected hose applies no suction to your finger.

OK	Go to step 10.

NG

7	Check vacuum hose between intake manifold and VSV for EVAP, and VSV for EVAP and charcoal canister.

CHECK:

(a) Check that the vacuum hose is connected correctly.
(b) Check the vacuum hose for looseness and disconnection.
(c) Check the vacuum hose for cracks, hole, damage and blockage.

NG	Repair or replace.

OK

8	Check operation of the VSV for EVAP (See page SF–40).

NG	Replace VSV.

OK

9	**Check for open and short in harness connector between EFI main relay (Marking: EFI) and VSV for EVAP and ECM (See page IN–27).**

NG → **Repair or replace harness or connector.**

OK

Check and replace ECM (See page IN–27).

10	**Connect TOYOTA hand–held tester, when VSV connector for vapor pressure sensor is disconnected and VSV for EVAP is ON, measure voltage between terminals PTNK and E2 of ECM connector.**

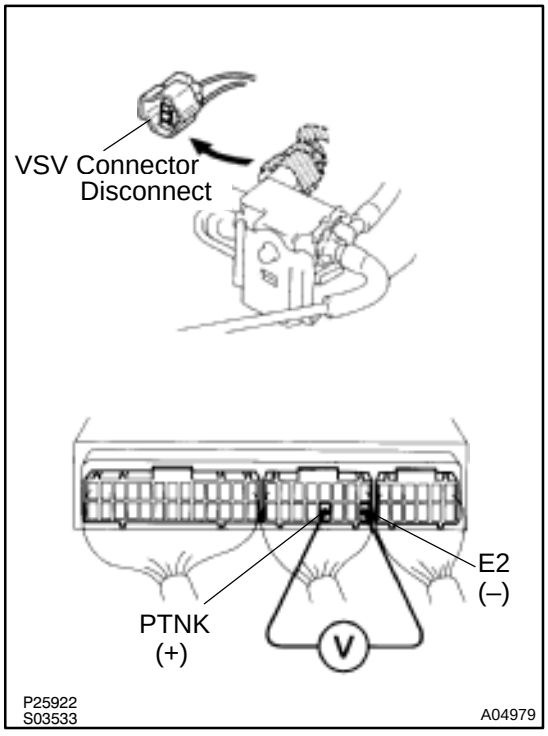

PREPARATION:

(a) Remove the fuse cover on the instrument panel.
(b) Connect the TOYOTA hand–held tester to the DLC3.
(c) Disconnect the VSV connector for vapor pressure sensor.
(d) Select the ACTIVE TEST mode on the TOYOTA hand–held tester.
(e) Remove the lower finish panel.
(f) Start the engine.

CHECK:

Measure voltage between terminals PTNK and E2 of ECM connector, when VSV for EVAP is ON, using the TOYOTA hand–held tester.

OK:

Voltage: 2.0 or less

OK → **Go to step 12.**

NG

11	**Check vacuum hose between charcoal canister and VSV for vapor pressure sensor, and vapor pressure and VSV for vapor pressure sensor.**

CHECK:

(a) Check that the vacuum hose is connected correctly.
(b) Check the vacuum hose for looseness and disconnection.
(c) Check the vacuum hose cracks, hole damage and blockage.

NG → **Repair or replace.**

OK

12	**Check operation of VSV for vapor pressure sensor (See page SF–42).**

NG → **Replace VSV.**

OK

13	**Check for open and short in harness and connector between EFI main relay (Marking: EFI) and VSV for vapor pressure sensor and ECM (See page IN–27).**

NG → **Replace or replace harness or connector.**

OK

14	Check the charcoal canister.

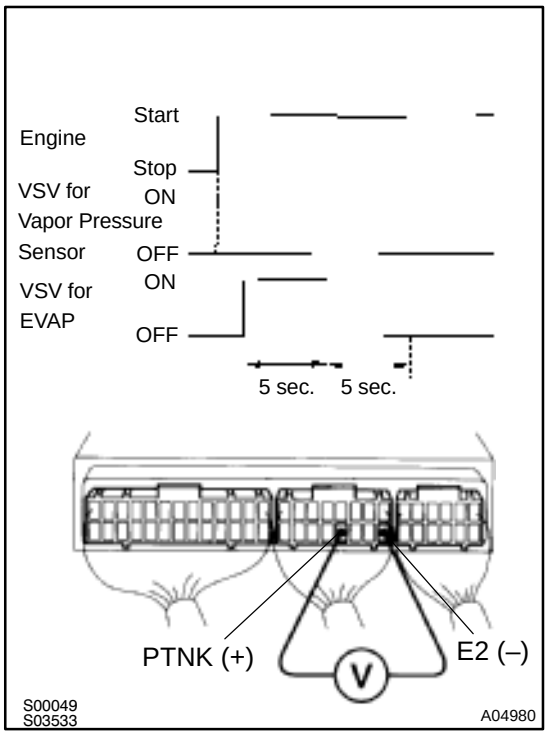

PREPARATION:

(a) Remove the fuse cover on the instrument panel.
(b) Connect the TOYOTA hand–held tester to the DLC3.
(c) Remove the fuel tank cap.
(d) Disconnect the VSV connector for vapor pressure sensor.
(e) Select the ACTIVE TEST mode on the TOYOTA hand–held tester.
(f) Start the engine.
(g) VSV for EVAP is ON by TOYOTA hand–held tester and remains on for 5 sec.

CHECK:

Measure voltage between terminals PTNK and E2 of ECM connector 5 sec. after switching VSV for EVAP from ON to OFF.

OK:

Voltage: 2.5 V or less

NG → **Replace charcoal canister.**

OK

Check and replace ECM (See page IN–27).

OBD II scan tool (excluding TOYOTA hand–held tester)

1	Check the VSV connector for EVAP, VSV connector for vapor pressure sensor and vapor pressure sensor connector for looseness and disconnection.

NG → **Repair or connect VSV or sensor connector.**

OK

2	**Check vacuum hose between intake manifold and VSV for EVAP, VSV for EVAP and charcoal canister, charcoal canister and VSV for vapor pressure sensor, and VSV for vapor pressure sensor and vapor pressure sensor.**

CHECK:

(a) Check that the vacuum hose is connected correctly.
(b) Check the vacuum hose for looseness and disconnection.
(c) Check the vacuum hose for cracks, hole, damage, and blockage.

NG → **Repair or replace.**

OK

3	**Check voltage between terminals VC and E2 of ECM connector (See page DI–70, step 9).**

NG → **Check and replace ECM (See page IN–27).**

OK

4	**Check voltage between terminals PTNK and E2 of ECM connector (See page DI–70, step 10).**

OK → **Go to step 6.**

NG

5	**Check for open and short in harness and connector between vapor pressure sensor and ECM (See page IN–27).**

NG → **Repair or replace harness or connector.**

OK

Replace vapor pressure sensor.

6	Check the VSV for EVAP.

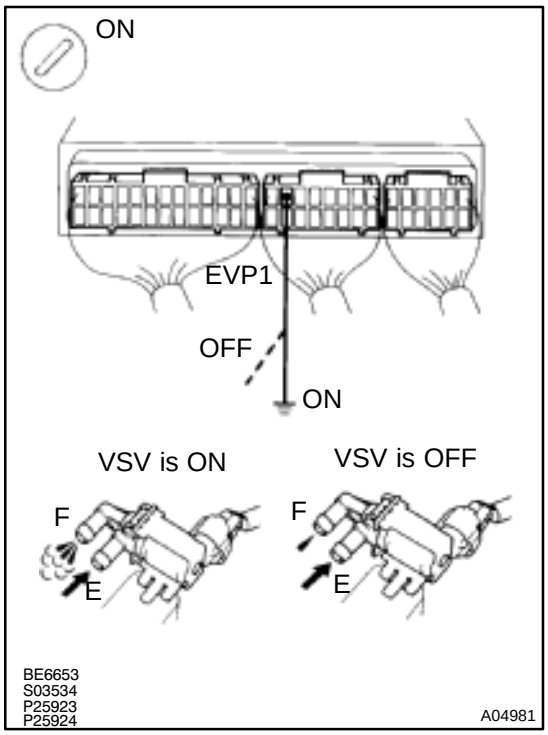

PREPARATION:

(a) Remove the lower finish panel.

(b) Turn ignition switch ON.

CHECK:

Check VSV function.

(1) Connect between terminal EVP1 of ECM and body ground.

(2) Disconnect between terminal EVP1 of ECM and body ground.

OK:

(1) VSV is ON:
Air from pipe E is flowing out through pipe F.
(2) VSV is OFF:
Air does not flow from pipe E to pipe F.

OK	Go to step 9.

NG

7	Check operator of the VSV for EVAP (See page SF–40).

NG	Replace VSV.

OK

8	**Check for open and short in harness and connector between EFI main relay (Marking: EFI) and VSV for EVAP and ECM (See page IN–27).**

NG → **Repair or replace harness or connector.**

OK

Check and replace ECM (See page IN–27).

9	**Check VSV for vapor pressure sensor.**

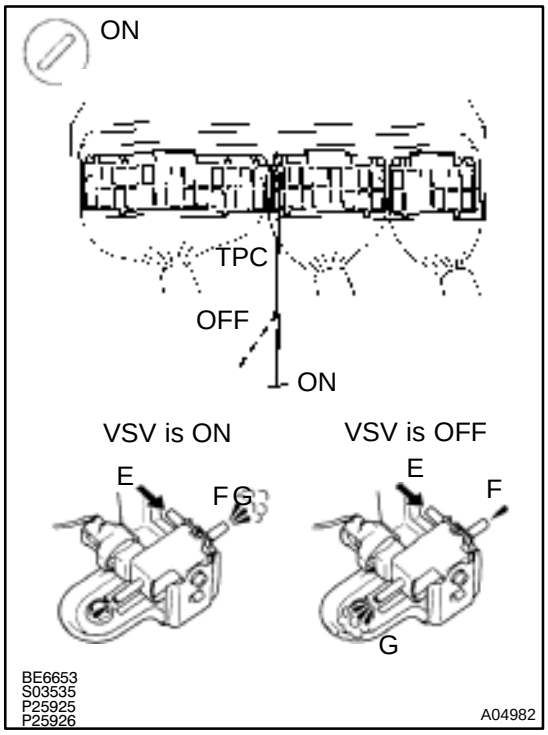

PREPARATION:

(a) Remove the lower finish panel.

(b) Turn ignition switch ON.

CHECK:

Check VSV function.

(1) Connect between terminal TPC of ECM and body ground.

(2) Disconnect between terminal TPC of ECM and body ground.

OK:

(1) VSV is ON:
Air from pipe E is flowing out through pipe F.
(2) VSV is OFF:
Air from pipe E is flowing out through pipe G.

OK → **Check and replace charcoal canister (See page EC–5).**

NG

10	Check operation of the VSV for vapor pressure sensor (See page SF–42).

NG → Replace VSV.

OK

11	Check for open and short in harness and connector between EFI main relay (Marking: EFI) and VSV for vapor pressure sensor and ECM (See page IN–27).

NG → Repair or replace harness or connector.

OK

Check and replace ECM (See page IN–27).

DTC	P0450	Evaporative Emission Control System Pressure Sensor Malfunction

CIRCUIT DESCRIPTION

The vapor pressure sensor and VSV for vapor pressure sensor are used to detect abnormalities in the evaporative emission control system.
The ECM decides whether there is an abnormality in the evaporative emission control system based on the vapor pressure sensor signal.
DTC P0450 is recorded by the ECM when the vapor pressure sensor malfunction.

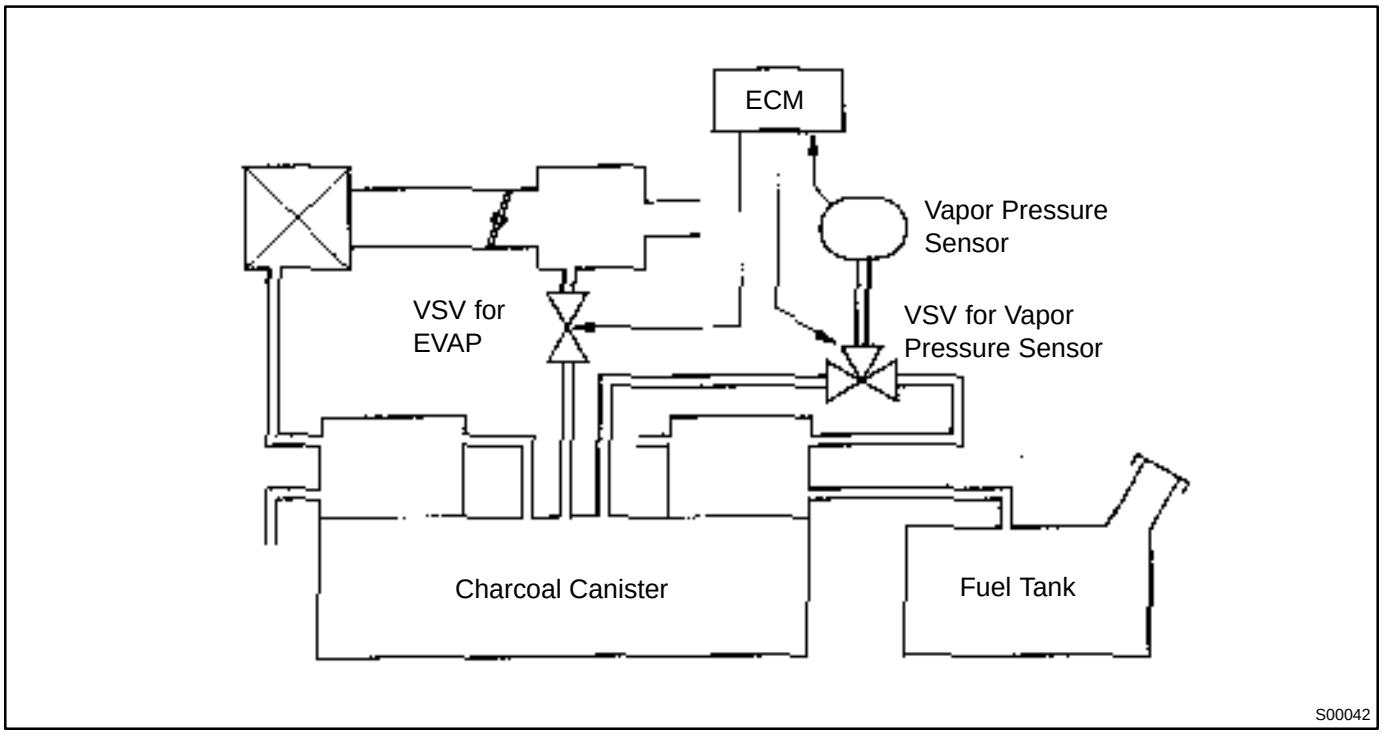

DTC No.	DTC Detecting Condition	Trouble Area
P0450	After engine has started and when 10 seconds has not passed away, conditions (a) and (b) continue for 7 seconds or more: (a) PTNK < 0.5 V (b) PTNK ≧ 4.5 V	• Open or short in vapor pressure sensor circuit • Vapor pressure sensor • ECM
	After engine has started and when 10 seconds has passed away, conditions (c) and (d) continue for 7 seconds or more: (c) PTNK < 0.1 V (d) PTNK ≧ 4.9 V	

WIRING DIAGRAM

Refer to Evaporative Emission Control System Malfunction on page DI–70.

INSPECTION PROCEDURE

HINT:
If DTC P0441, P0446 or P0450 is output after DTC P0440, first troubleshoot DTC P0441, P0446 or P0450.
If no malfunction is detected, troubleshoot DTC P0440 next.

1	Check voltage between terminals VC and E2 of ECM connector (See page DI–70, step 9).

NG → Check and replace ECM (See page IN–27).

OK

2	Check voltage between terminals PTNK and E2 of ECM connector (See page DI–70, step 10).

OK → Check and replace ECM (See page IN–27).

NG

3	Check for open and short in harness and connector between the vapor pressure sensor and ECM (See page IN–27).

NG → Repair or replace harness or connector.

OK

Replace vapor pressure sensor.

DI4O9–01

DTC	P0500	Vehicle Speed Sensor Malfunction

CIRCUIT DESCRIPTION

This sensor is mounted in the combination meter. It contains a magnet witch is rotated by the speedometer cable.
Turning the reed switch ON and OFF 4 times for every revolution of the speedometer.
It is then transmitted to the ECM. The ECM determines the vehicle speed based on the frequency of these pulse signals.

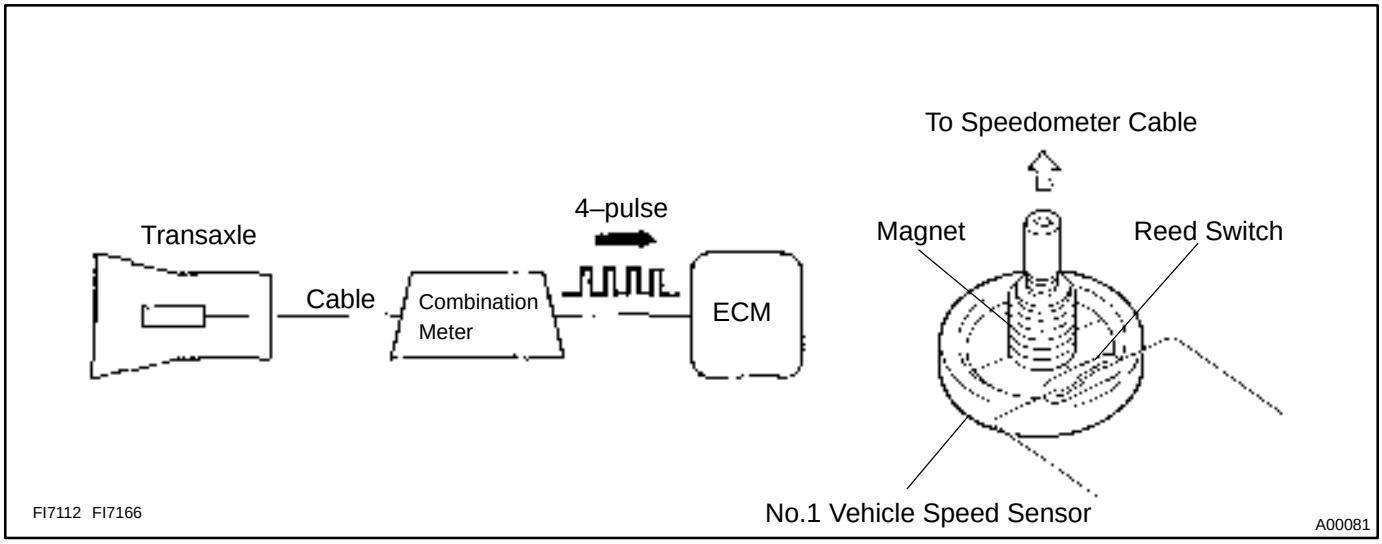

DTC No.	DTC Detecting Condition	Trouble Area
P0500	No vehicle speed sensor signal to ECM when vehicle is being driven (2 trip detection logic)	• Open or short in No.1 vehicle speed sensor circuit • Vehicle speed sensor • Speedometer cable • ECM

WIRING DIAGRAM

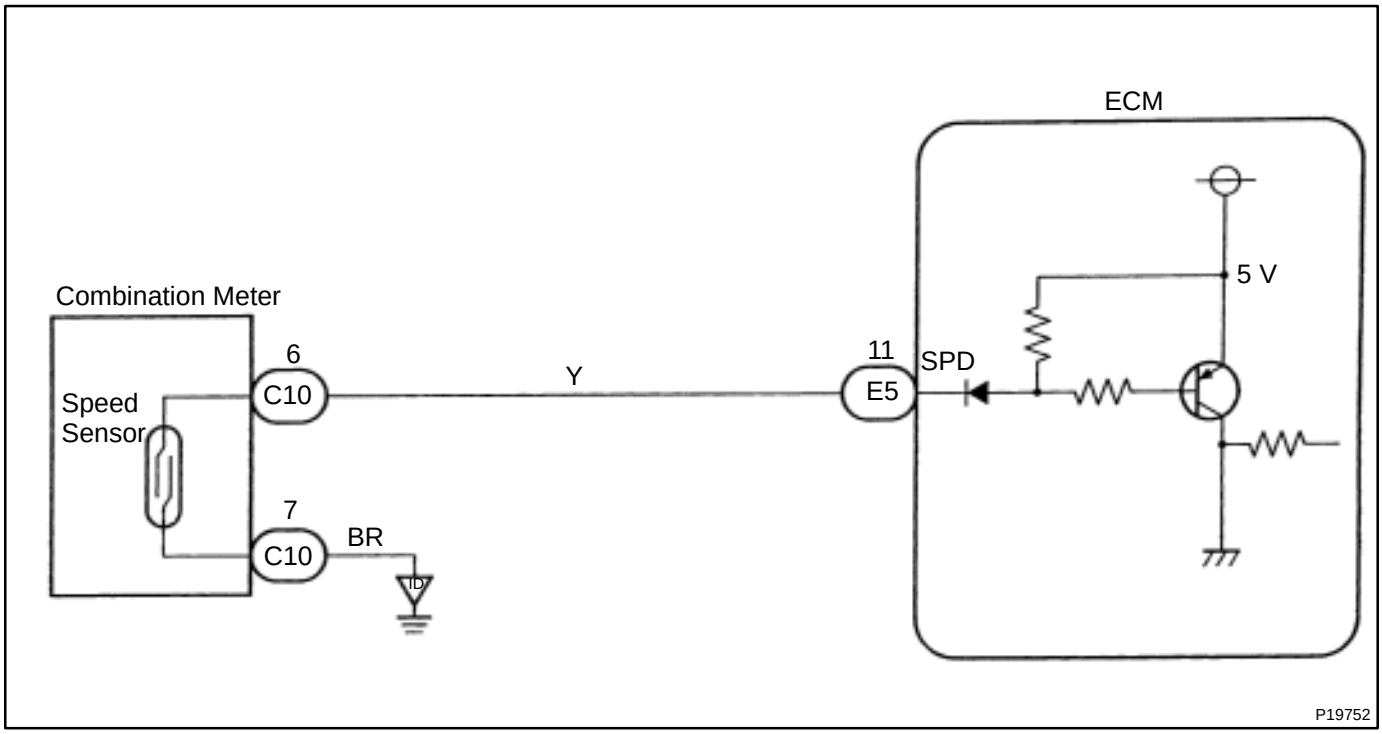

INSPECTION PROCEDURE

1	**Check operation of speedometer.**

CHECK:

Drive the vehicle and check if the operation of the speedmeter in the combination meter is normal.

HINT:

The vehicle speed sensor is operating normally if the speedometer display is normal.

NG → **Check speedometer circuit. See combination meter troubleshooting.**

OK

2	Check voltage between terminal SPD of ECM connector and body ground.

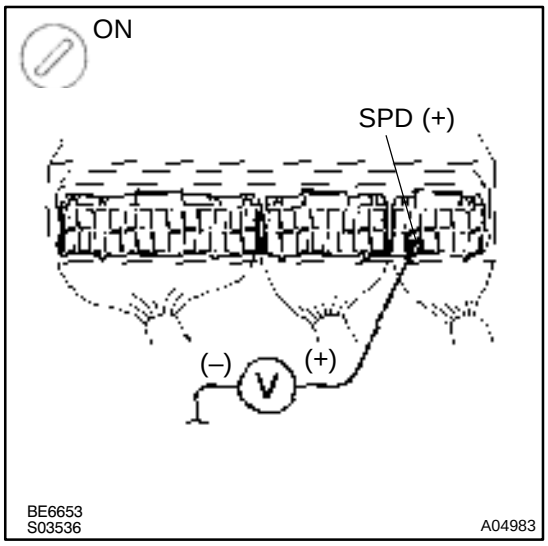

PREPARATION:

(a) Remove the lower finish panel.
(b) Shift the shift lever to neutral.
(c) Jack up one of the front wheels.
(d) Turn ignition switch ON.

CHECK:

Measure voltage between terminal SPD of ECM connector and body ground when the wheel is turned slowly.

OK:

Voltage is generated intermittently.

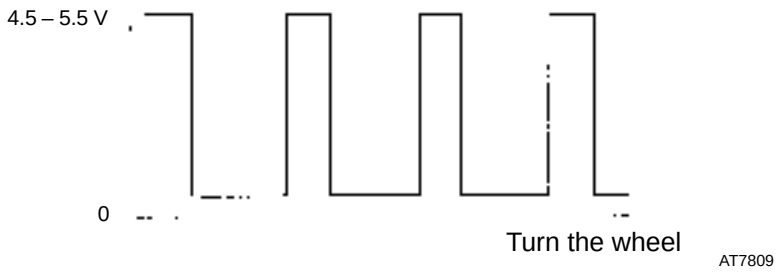

NG → **Check and repair harness and connector between combination meter and ECM.**

OK

Check and replace ECM (See page IN–27).

DI4OA–01

DTC	P0505	Idle Control System Malfunction

CIRCUIT DESCRIPTION

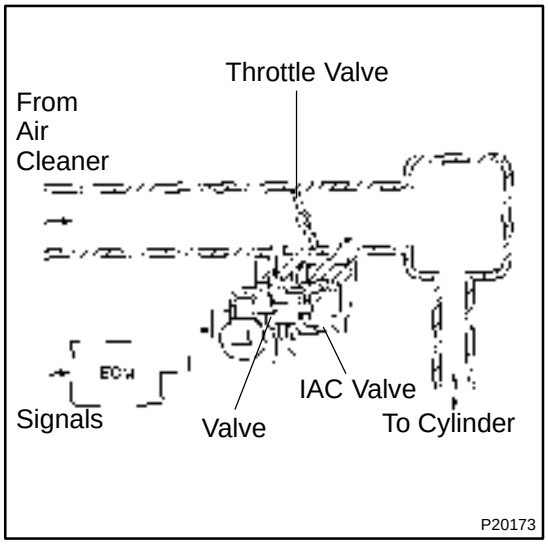

The rotary solenoid type IAC valve is located on the throttle body and intake air bypassing the throttle valve is directed to the IAC valve through a passage.
In this way the intake air volume bypassing the throttle valve is regulated, controlling the engine speed.
The ECM operates only the IAC valve to perform idle–up and provide feedback for the target idling speed.

DTC No.	DTC Detecting Condition	Trouble Area
P0505	Idle speed continues to vary greatly from the target speed (2 trip detection logic)	• IAC valve is stuck or closed • Open or short in IAC valve circuit • Open or short in AC1 switch circuit • Air intake (hose loose)

WIRING DIAGRAM

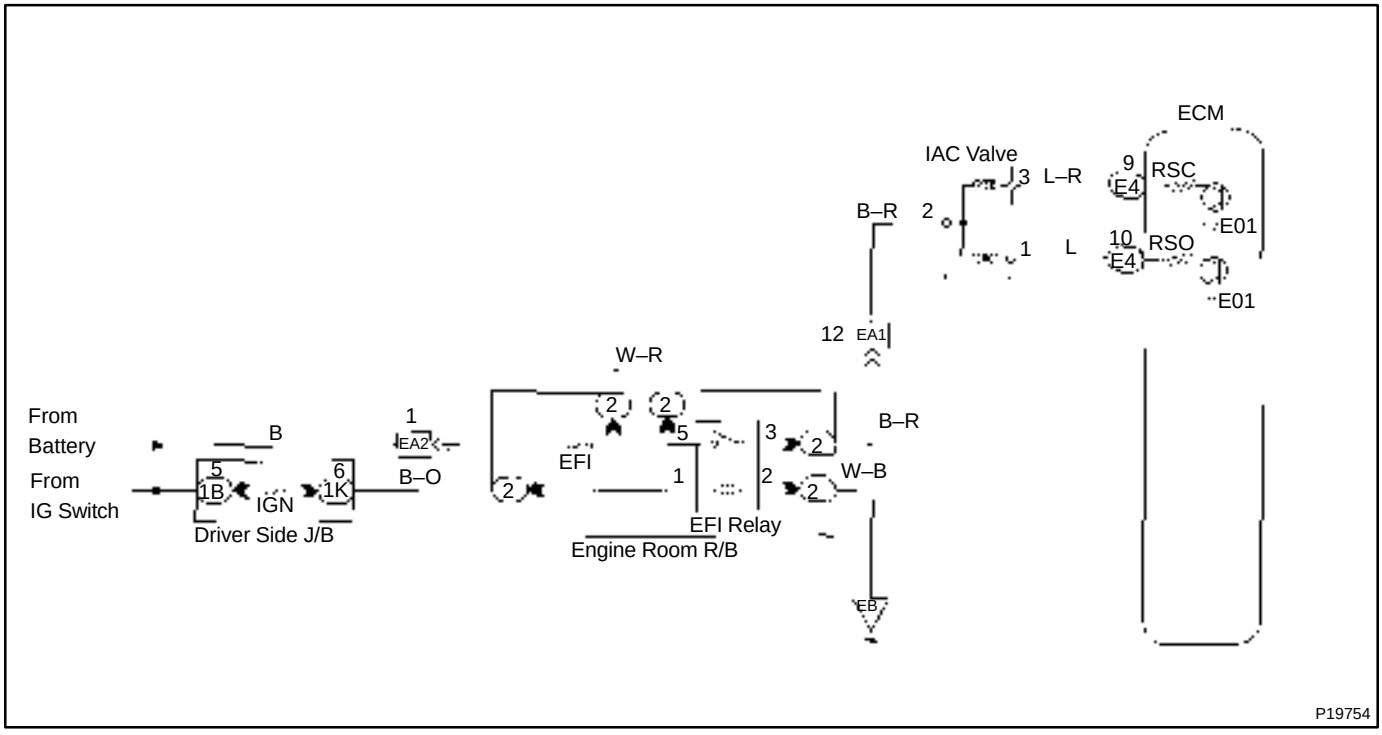

INSPECTION PROCEDURE

1	**Check air induction system (See page SF–1).**

NG → **Repair or replace.**

OK

2	**Check A/C signal circuit (See page AC–69).**

NG → **Repair or replace.**

OK

3	**Check voltage between terminals RSO, RSC of ECM connector and body ground.**

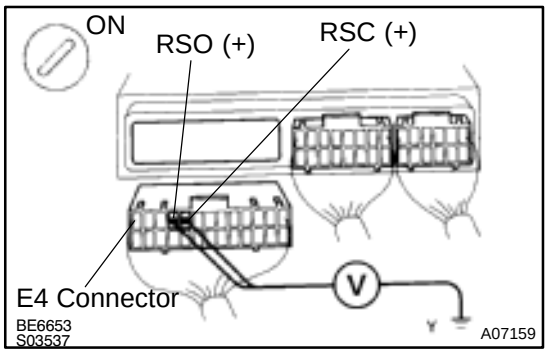

PREPARATION:
(a) Remove the lower finish panel.
(b) Disconnect the "E4" connector of ECM.
(c) Turn ignition switch ON.

CHECK:
Measure voltage between terminals RSO, RSC of ECM connector and body ground,

OK:
Voltage: 9 – 14 V

OK → **Go to step 5.**

NG

4	Check IAC valve (See page SF–31).

NG → Replace IAC valve.

OK →

Check for open and short in harness and connector between junction connector and IAC valve and ECM (See page IN–27).

5	Check operation of the IAC valve (See page SF–34).

NG → Repair or replace IAC valve.

OK →

Check and replace ECM (See page IN–27).

Starter Signal Circuit

CIRCUIT DESCRIPTION

When the engine is cranked, the intake air flow is slow, so fuel vaporization is poor. A rich mixture is therefore necessary in order to achieve good startability. While the engine is being cranked, the battery positive voltage is applied to terminal STA of the ECM. The starter signal is mainly used to increase the fuel injection volume for the starting injection control and after–start injection control.

WIRING DIAGRAM

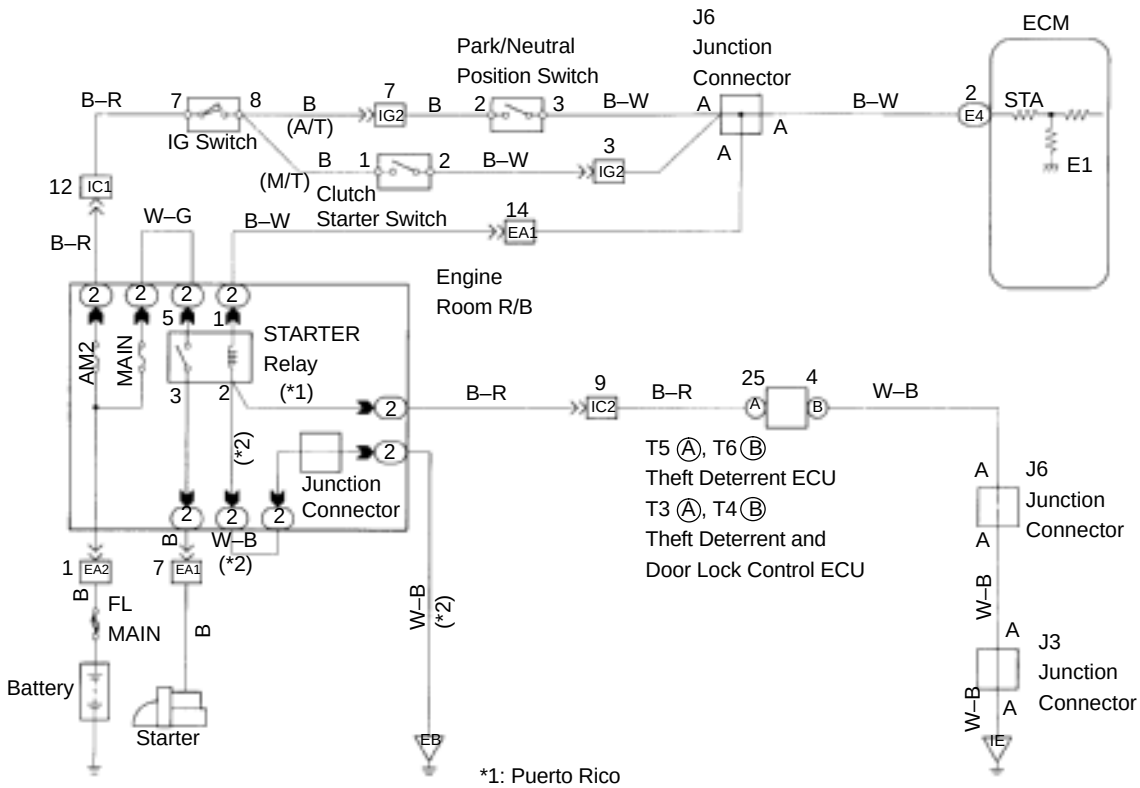

INSPECTION PROCEDURE
TOYOTA hand–held tester:

HINT:
This diagnostic chart is based on the premise that the engine is cranked normally. If the engine is not cranked, proceed to the matrix chart of problem symptoms on page DI–20.

1	**Connect TOYOTA hand–held tester and check STA signal.**

PREPARATION:
(a) Remove the fuse cover on the instrument panel.
(b) Connect the TOYOTA hand–held tester to the DLC3.
(c) Turn ignition switch ON and TOYOTA hand–held tester main switch ON.

CHECK:
Read STA signal on the TOYOTA hand–held tester while starter operates.

OK:

Ignition Switch Position	ON	START
STA signal	OFF	ON

OK → **Proceed to next circuit inspection shown on matrix chart (See page DI–20).**

NG

2	**Check for open in harness and connector between ECM and starter relay (See page IN–27).**

NG → **Repair or replace harness or connector.**

OK

Check and replace ECM (See page IN–27).

OBD II scan tool (excluding TOYOTA hand–held tester):

1	**Check voltage between terminal STA of ECM connector and body ground.**

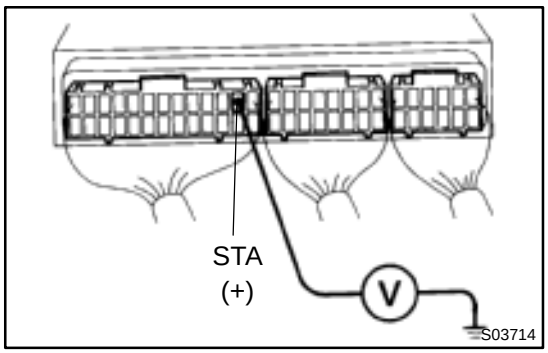

PREPARATION:
Remove the lower finish panel.
CHECK:
Measure voltage between terminal STA of ECM connector and body ground when engine is cranked.
OK:

Voltage: 6.0 V or more

OK → **Proceed to next circuit inspection shown on matrix chart (See page DI–20).**

NG

2	**Check for open in harness and connector between ECM and starter relay (See page IN–27).**

NG → **Repair or replace or connector.**

OK

Check and replace ECM (See page IN–27).

DI4NI–01

CUSTOMER PROBLEM ANALYSIS CHECK

ENGINE CONTROL SYSTEM Check Sheet

Inspector's Name _____

Customer's Name		**Model and Model Year**	
Driver's Name		**Frame No.**	
Data Vehicle Brought in		**Engine Model**	
License No.		**Odometer Reading**	km miles

Problem Symptoms	☐ **Engine does not Start**	☐ **Engine does not crank** ☐ **No initial combustion** ☐ **No complete combustion**
	☐ **Difficult to Start**	☐ **Engine cranks slowly** ☐ **Other** _____
	☐ **Poor Idling**	☐ **Incorrect first idle** ☐ **Idling rpm is abnormal** ☐ **High (rpm)** ☐ **Low (rpm)** ☐ **Rough idling** ☐ **Other** _____
	☐ **Poor Driveaability**	☐ **Hesitation** ☐ **Back fire** ☐ **Muffler explosion (after–fire)** ☐ **Surging** ☐ **Knocking** ☐ **Other** _____
	☐ **Engine Stall**	☐ **Soon after starting** ☐ **After accelerator pedal depressed** ☐ **After accelerator pedal released** ☐ **During A/C operation** ☐ **Shifting from N to D** ☐ **Other** _____
	☐ **Others**	

Datas Problem Occurred		
Problem Frequency		☐ **Constant** ☐ **Sometimes (times per day/month)** ☐ **Once only** ☐ **Other** _____
Condition When Problem Occurs	**Weather**	☐ **Fine** ☐ **Cloudy** ☐ **Rainy** ☐ **Snowy** ☐ **Various/Other** _____
	Outdoor Temperature	☐ **Hot** ☐ **Warm** ☐ **Cool** ☐ **Cold (approx. ____˚F/____˚C)**
	Place	☐ **Highway** ☐ **Suburbs** ☐ **Inner City** ☐ **Uphill** ☐ **Downhill** ☐ **Rough road** ☐ **Other** _____
	Engine Temp.	☐ **Cold** ☐ **Warming up** ☐ **After Warming up** ☐ **Any temp.** ☐ **Other** _____
	Engine Operation	☐ **Starting** ☐ **Just after starting (min.)** ☐ **Idling** ☐ **Racing** ☐ **Driving** ☐ **Constant speed** ☐ **Acceleration** ☐ **Deceleration** ☐ **A/C switch ON/OFF** ☐ **Other** _____

Condition of MIL		☐ **Remains on** ☐ **Sometimes light up** ☐ **Does not light up**
DTC Inspection	**Normal mode (Precheck)**	☐ **Normal** ☐ **Malfunction code(s) (code)** ☐ **Freezed frame data ( )**
	Check Mode	☐ **Normal** ☐ **Malfunction code(s) (code)** ☐ **Freezed frame data ( )**

DI4NK–01

DIAGNOSTIC TROUBLE CODE CHART

HINT:

Parameters listed in the chart may not be exactly the same as your reading due to the type of instrument or other factors.

If a malfunction code is displayed during the DTC check in check mode, check the circuit for that code listed in the table below, for details of each code, turn to the page referred to under the ”See page ” for the respective ”DTC No.” in the DTC chart.

SAE Controlled:

DTC No. (See Page)	Detection Item	Trouble Area	MIL*1	Memory
P0105 (DI–21)	Manifold Absolute Pressure/Barometric Pressure Circuit Malfunction	• Open or short in manifold absolute pressure sensor circuit • Manifold absolute pressure sensor • ECM	○	○
P0106 (DI–25)	Manifold Absolute Pressure Barometric Pressure Circuit Range/Performance Problem	• Manifold absolute pressure sensor	○	○
P0110 (DI–27)	Intake Air Temp. Circuit Malfunction	• Open or short in intake air temp. sensor circuit • Intake air temp. sensor • ECM	○	○
P0115 (DI–31)	Engine Coolant Temp. Circuit Malfunction	• Open or short in engine coolant temp. sensor circuit • Engine coolant temp. sensor • ECM	○	○
P0116 (DI–35)	Engine Coolant Temp. Circuit Range/Performance Problem	• Engine coolant temp. sensor • Cooling system	○	○
P0120 (DI–36)	Throttle/Pedal Position Sensor/Switch ”A” Circuit Malfunction	• Open or short in throttle position sensor circuit • Throttle position sensor • ECM	○	○
P0121 (DI–40)	Throttle/Pedal Position Sensor/Switch ”A” Circuit Range/Performance Problem	• Throttle position sensor	○	○
P0125 (DI–41)	Insufficient Coolant Temp. for Closed Loop Fuel Control (Except California Spec.)	• Open or short in heated oxygen sensor circuit • Oxygen sensor	○	○
P0130 (DI–44)	Oxygen Sensor Circuit Malfunction (Bank 1 Sensor 1)	• Heated oxygen sensor • Fuel trim malfunction	○	○
P0133 (DI–47)	Oxygen Sensor Circuit Slow Response (Bank 1 Sensor 1)	• Oxygen sensor	○	○
P0136 (DI–48)	Heated Oxygen Sensor Circuit Malfunction (Bank 1 Sensor 2)	• Heated oxygen sensor	○	○
P0141 (DI–50)	Heated Oxygen Sensor Heater Circuit Malfunction (Bank 1 Sensor 2)	• Open or short in heater circuit of heated oxgen sensor • Heated oxgen sensor heater • ECM	○	○
P0171 (DI–51)	System too Lean (Fuel Trim)	• Air intake (hose loose) • Fuel line pressure • Injector blockage • Manifold absolute pressure sensor • Engine coolant temp. sensor	○*	○

*: ○ · · · MIL lights up

DTC No. (See Page)	Detection Item	Trouble Area	MIL*1	Memory
P0172 (DI–51)	System too Rich (Fuel Trim)	• Fuel line pressure • Injector leak, blockage • Manifold absolute pressure sensor • Engine coolant temp. sensor	○*	○
P0300 (DI–54)	Random/Multiple Cylinder Misfire Detected	• Ignition system • Injector • Fuel line pressure • Compression pressure • Valve clearance not to specification • Valve timing • Manifold absolute pressure sensor • Engine coolant temp. sensor	○	○
P0301 P0302 P0303 P0304 (DI–54)	Misfire Detected – Cylinder 1 – Cylinder 2 – Cylinder 3 – Cylinder 4			
P0325 (DI–59)	Knock Sensor 1 Circuit Malfunction	• Open or short in knock sensor 1 circuit • Knock sensor 1 (looseness) • ECM	○*	○
P0335 (DI–62)	Crankshaft Position Sensor ”A” Circuit Malfunction	• Open or short in crankshaft position sensor circuit • Crankshaft position sensor • Starter • ECM	○*	○
P0340 (DI–65)	Camshaft Position Sensor Circuit Malfunction	• Open or short in camshaft position sensor circuit • Camshaft position sensor • Starter • ECM	○*	○
P0420 (DI–67)	Catalyst System Efficiency Below Threshold	• Three–way catalytic converter • Open or short in heated oxygen sensor (bank 1 sensor 2) circuit • Heated oxygen sensor (bank 1 sensor 2) • Open or short in heated oxygen sensor (bank 1 sensor 1) / A/F sensor *2 circuit • Heated oxygen sensor (bank 1 sensor 1) / A/F sensor *2	○	○
P0440 (DI–70)	Evaporative Emission Control System Malfunction	• Vapor pressure sensor • Fuel tank cap incorrectly installed • Fuel tank cap cracked or damaged • Vacuum hose cracked, holed, blocked, damaged or disconnected • Hose or tube cracked, holed, damaged or loose • Fuel tank cracked, holed or damaged • Charcoal canister cracked, holed or damaged	○	○
P0441 (DI–76)	Evaporative Emission Control System Incorrect Purge Flow	• Open or short in VSV circuit for EVAP • VSV for EVAP • Open or short in vapor pressure sensor circuit • Vapor pressure sensor • Open or short in VSV circuit for vapor pressure sensor • VSV for vapor pressure sensor • Vacuum hose damaged, blocked or disconnected • Charcoal canister	○	○
P0446 (DI–76)	Evaporative Emission Control System Vent Control Malfunction		○	○
P0450 (DI–87)	Evaporative Emission Control System Pressure Sensor Malfunction	• Open or short in vapor pressure sensor circuit • Vapor pressure sensor • ECM	○	○

*: MIL lights up

DTC No. (See Page)	Detection Item	Trouble Area	MIL*1	Memory
P0500 (DI–89)	Vehicle Speed Sensor Malfunction	• Open or short in speed sensor circuit • Vehicle speed sensor • Speedometer cable • ECM	○	○
P0505 (DI–92)	Idle Control System Malfunction	• IAC valve is stuck or closed • Open or short in IAC valve circuit • Open or short in AC1 signal circuit • Air intake (hose loose)	○	○

*: ○ · · · MIL lights up

Manufacturer Controlled:

DTC No. (See Page)	Detection Item	Trouble Area	MIL*	Memory
P1300 (DI–95)	Igniter Circuit Malfunction	• Open or short in IGF or IGT1 circuit from igniter • Igniter • ECM	○	○
P1335 (DI–100)	Crankshft Position Sensor Circuit Malfunction (during engine running)	• Open or short in crankshaft position sensor circuit • Crankshaft position sensor • ECM	—	○
P1520 (DI–101)	Stop Light Switch Signal Malfunction	• Short in stop light switch signal circuit • Stop light switch • ECM	○	○
P1600 (DI–104)	ECM BATT Malfunction	• Open in back up power source circuit • ECM	○	○
P1780 (DI–106)	Park/Neutral Position Switch Malfunction	• Short in park/neutral position switch circuit • Park/neutral position switch • ECM	○	○

*: ○ · · · MIL lights up

*: — · · · MIL does not light up

ENGINE

DI4NH–01

HOW TO PROCEED WITH TROUBLESHOOTING

Troubleshoot in accordance with the procedure on the following page.

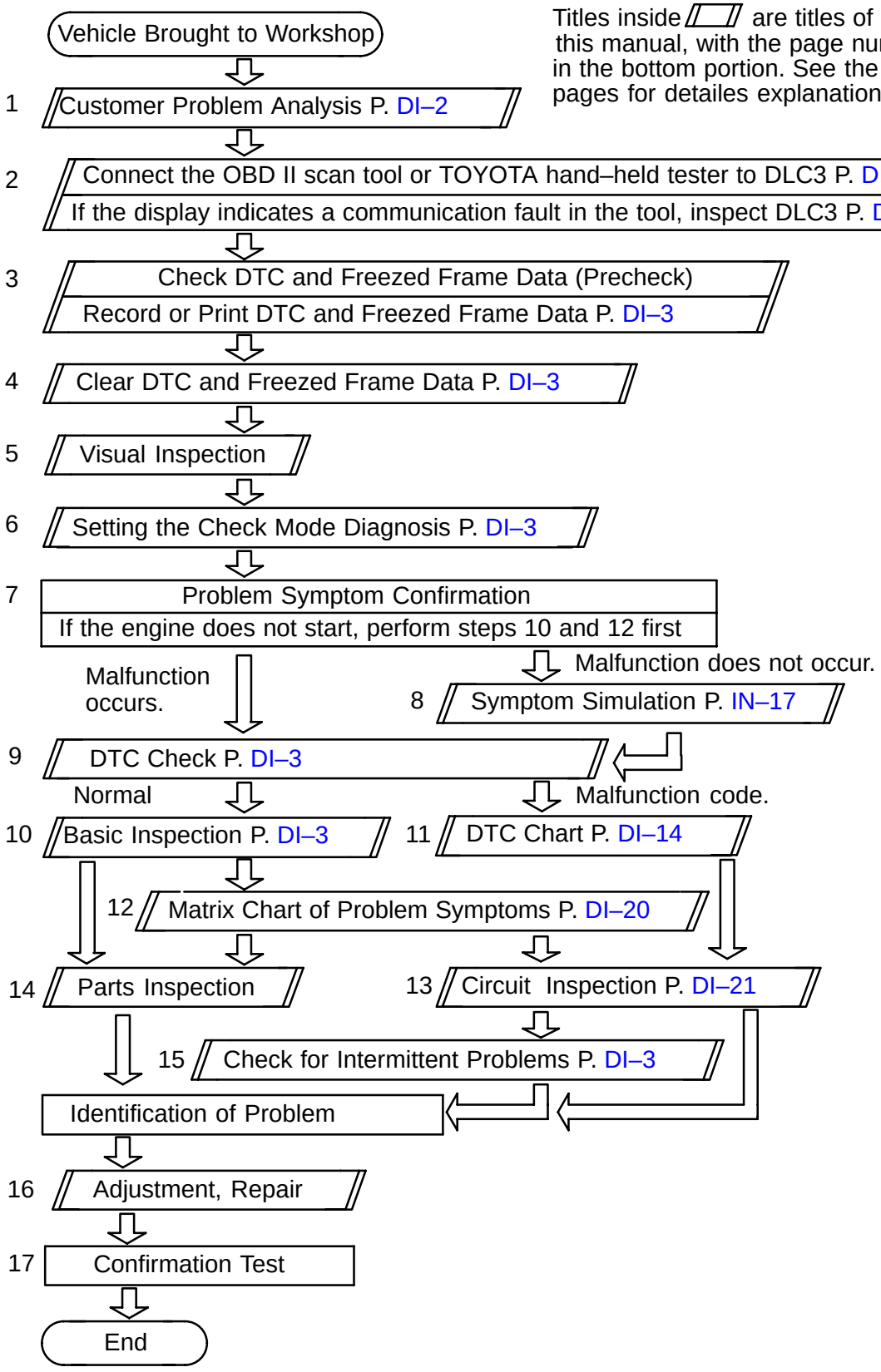

Titles inside ▱ are titles of pages in this manual, with the page number indicated in the bottom portion. See the indicated pages for detailes explanations.

DI4NL–01

PARTS LOCATION

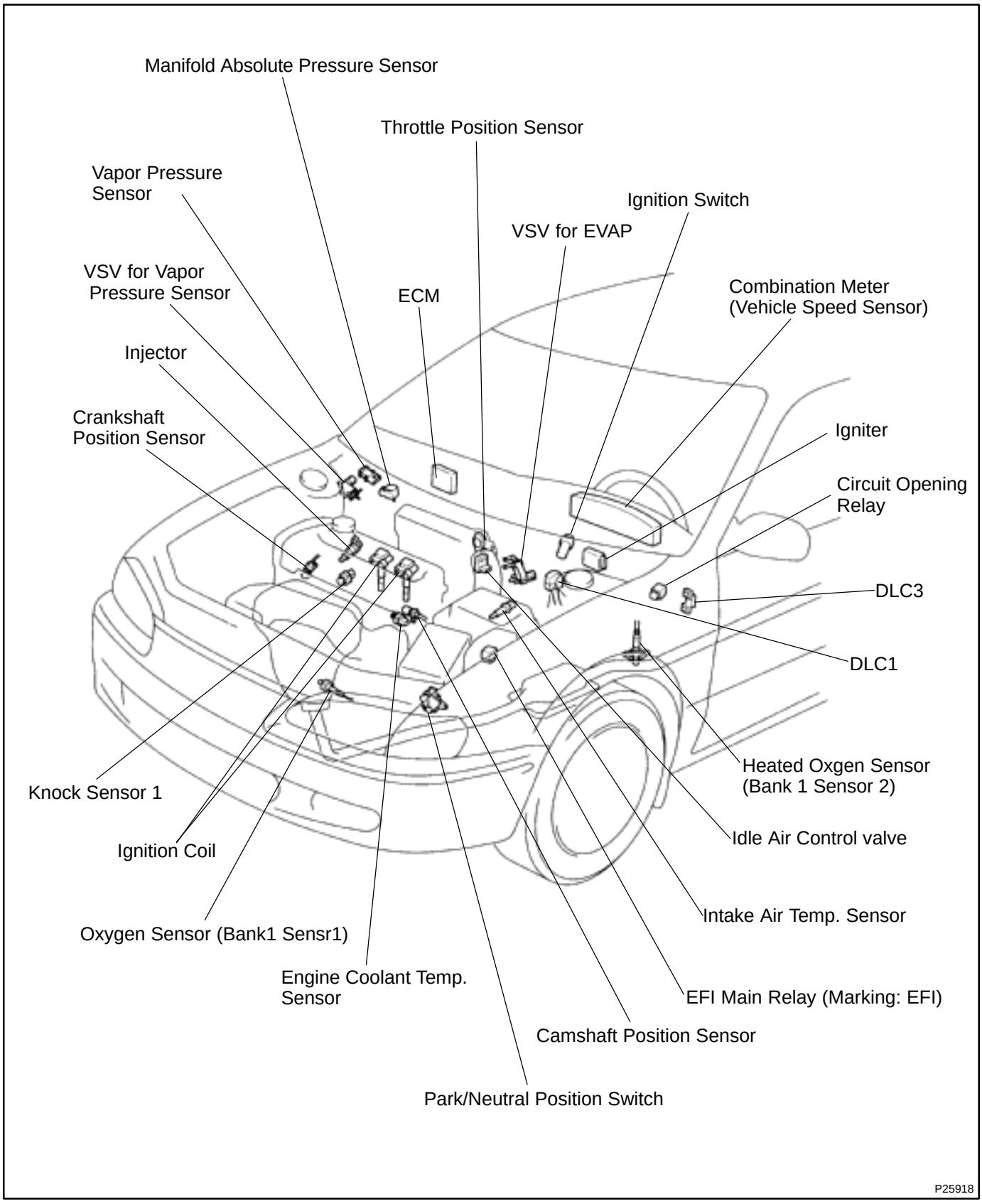

DI4NJ–01

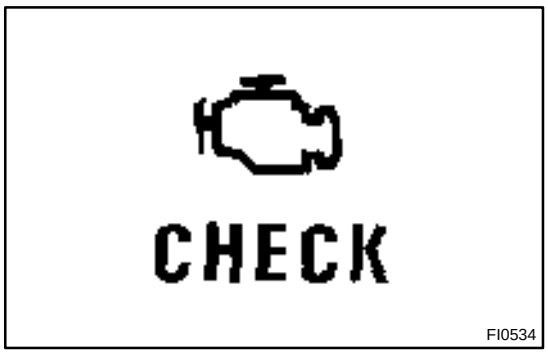

PRE–CHECK

1. DIAGNOSIS SYSTEM

(a) Description.

When troubleshooting OBD II vehicles, the only difference from the usual troubleshooting procedure is that you connect to the vehicle the OBD II scan tool complying with SAE 1978 or TOYOTA hand–held tester, and read off various data output from the vehicle's ECM.

OBD II regulations require that the vehicle's on–board computer lights up the Malfunction Indicator Lamp (MIL) on the instrument panel when the computer detects a malfunction in the computer itself or in drive system components which affect vehicle emissions. In addition to the MIL lighting up when a malfunction is detected, the applicable Diagnostic Trouble Code (DTC) prescribed by SAE J2012 are recorded in the ECM memory.

(See page DI–14)

If the malfunction does not reoccur in 3 trips, the MIL goes off but the DTC remain recorded in the ECM memory.

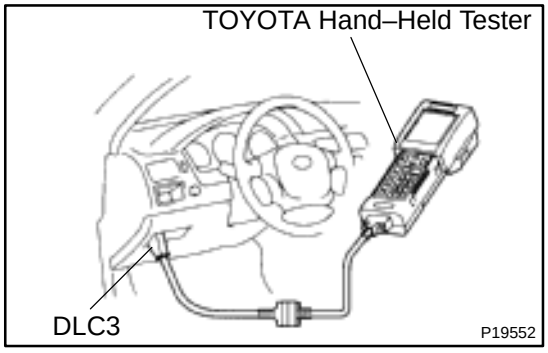

To check the DTC, connect the OBD II scan tool or TOYOTA hand–held tester to Data Link Connector 3 (DLC3) on the vehicle. The OBD II scan tool or TOYOTA hand–held tester also enables you to erase the DTC and check freezed frame data and various forms of engine data. (For operating instructions, see the OBD II scan tool's instruction book.)

DTC include SAE controlled codes and Manufacturer controlled codes.

SAE controlled codes must be set as prescribed by the SAE, while Manufacturer controlled codes can be set freely by the manufacturer within the prescribed limits.

(See DTC chart on page DI–14)

The diagnosis system operates in normal mode during normal vehicle use. It also has a check mode for technicians to simulate malfunction symptoms and troubleshoot. Most DTC use 2 trip detection logic* to prevent erroneous detection, and ensure thorough malfunction detection. By switching the ECM to check mode when troubleshooting, the technician can cause the MIL to light up for a malfunction that is only detected once or momentarily. (TOYOTA hand–held tester only)

(See page DI–3)

*2 trip detection logic:

When a logic malfunction is first detected, the malfunction is temporarily stored in the ECM memory. If the same malfunction is detected again during the second drive test, this second detection causes the MIL to light up.

The 2 trip repeats the same mode a 2nd time. (However, the IG switch must be turned OFF between the 1st trip and 2nd trip.)

Freeze frame data:

Freeze frame data records the engine condition when a misfire (DTC P0300 – P0304) or fuel trim malfunction (DTC P0171, P0172) or other malfunction (first malfunction only), is detected.

Because freeze frame data records the engine conditions (fuel system, calculator load, engine coolant temperature, fuel trim, engine speed, vehicle speed, etc.) when the malfunction is detected, when troubleshooting it is useful for determining whether the vehicle was running or stopped, the engine warmed up or not, the air–fuel ratio lean or rich, etc. at the time of the malfunction.

Priorities for troubleshooting:

If troubleshooting priorities for multiple diagnostic codes are given in the applicable diagnostic chart, these should be followed.

If no instructions are given, troubleshoot DTC according to the following priorities.

(1) DTC other than fuel trim malfunction (DTC P0171, P0172) and misfire (DTC P0300 – P0304).
(2) Fuel trim malfunction (DTC P0171, P0172).
(3) Misfire (DTC P0300 – P0304).

(b) Check the DLC3.

The vehicle's ECM uses ISO 9141–2 for communication. The terminal arrangement of DLC3 complies with SAE J1962 and matches the ISO 9141–2 format.

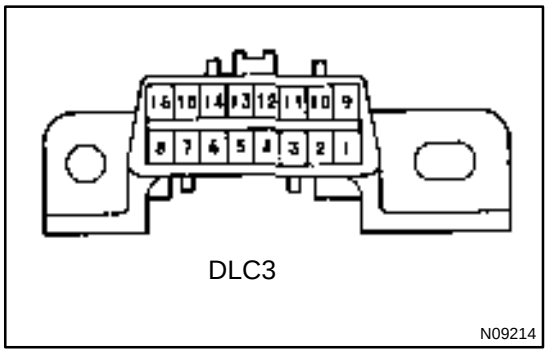

DLC3

Terminal No.	Connection / Voltage or Resistance	Condition
7	Bus ⊕ Line / Pulse generation	During transmission
4	Chassis Ground / ↔ Body Ground 1 Ω or less	Always
5	Signal Ground / ↔ Body Ground 1 Ω or less	Always
16	Battery Positive / ↔ Body Ground 9 – 14 V	Always

HINT:

If your display shows "UNABLE TO CONNECT TO VEHICLE" when you have connected the cable of the OBD II scan tool or TOYOTA hand–held tester to DLC3, turned the ignition switch ON and operated the scan tool, there is a problem on the vehicle side or tool side.

- If communication is normal when the tool is connected to another vehicle, inspect DLC3 on the original vehicle.
- If communication is still not possible when the tool is connected to another vehicle, the problem is probably in the

tool it self, so consult the Service Department listed in the tool's instruction manual.

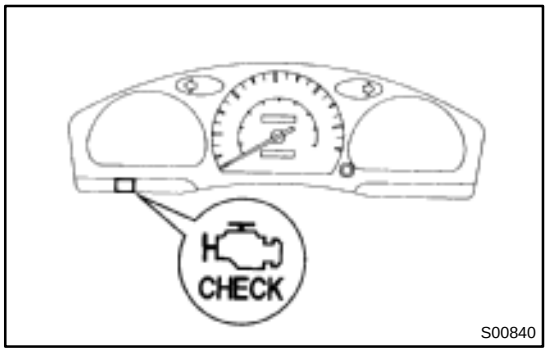

2. INSPECT DIAGNOSIS (Normal Mode)

(a) Check the MIL.

(1) The MIL comes on when the ignition switch is turned ON and the engine is not running.

HINT:

If the MIL does not light up, troubleshoot the combination meter.

(2) When the engine started, the MIL should go off. If the lamp remains on, the diagnosis system has detected a malfunction or abnormality in the system.

(b) Check the DTC.

NOTICE:

(TOYOTA hand–held tester only): When the diagnosis system is switched from normal mode to check mode, it erases all DTC and freezed frame data recorded in normal mode. So before switching modes, always check the DTCs and freezed frame data, and note them down

(1) Prepare the OBD II scan tool (complying with SAE J 1978) or TOYOTA hand–held tester.

(2) Connect the OBD II scan tool or TOYOTA hand–held tester to DLC3 in the fuse box at the lower of the instrument panel.

(3) Turn the ignition switch ON and turn the OBD II scan tool or TOYOTA hand–held tester switch ON.

(4) Use the OBD II scan tool or TOYOTA hand–held tester to check the DTC and freezed frame data, note them down. (For operating instructions, see the OBD II scan tool's instruction book.)

(5) See page DI–14 to confirm the details of the DTC.

NOTICE:

When simulating symptoms with an OBD II scan tool (excluding TOYOTA hand–held tester) to check the DTCs, use normal mode. For code on the DTC chart subject to "2 trip detection logic", turn the ignition switch OFF after the symptom is simulated the first time. Then repeat the simulation process again. When the problem has been simulated twice, the MIL lights up and the DTCs are recorded in the ECM.

3. INSPECT DIAGNOSIS (Check Mode)

TOYOTA hand–held tester only:

Compared to the normal mode, the check mode has an increased sensitivity to detect malfunctions.

Furthermore, the same diagnostic items which are detected in the normal mode can also be detected in the check mode.

(a) Check the DTC.

(1) Initial conditions.

- Battery positive voltage 11V or more.
- Throttle valve fully closed.
- Transmission in ”P” or ”N” position.
- Air conditioning switched OFF.

(2) Turn ignition switch OFF.

(3) Prepare the TOYOTA hand–held tester.

(4) Connect the TOYOTA hand–held tester to DLC3 in the fuse box at the lower left of the instrument panel.

(5) Turn the ignition switch ON and switch the TOYOTA hand–held tester ON.

(6) Switch the TOYOTA hand–held tester normal mode to check mode. (Check that the MIL flashes.)

(7) Start the engine. (The MIL goes out after the engine starts.)

(8) Simulate the conditions of the malfunction described by the customer.

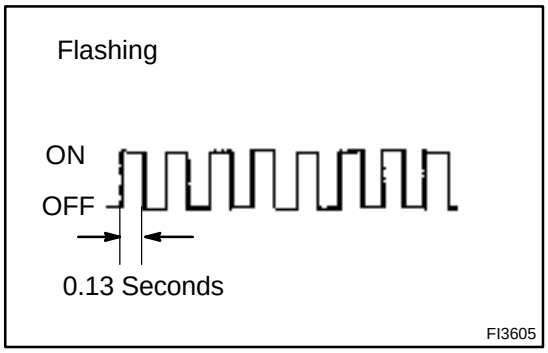

NOTICE:

Leave the ignition switch ON until you have checked the DTC, etc.

(9) After simulating the malfunction conditions, use the TOYOTA hand–held tester diagnosis selector to check the DTC and freezed frame data, etc.

HINT:

Take care not to turn the ignition switch OFF. Turning the ignition switch OFF switches the diagnosis system from check mode to normal mode, so all diagnostic codes, etc. are erased.

(10) After checking the DTC, inspect the applicable circuit.

(b) Clear the DTC.

The following actions will erase the DTC and freezed frame data.

(1) Operating the OBD II scan tool (complying with SAE J1978) or TOYOTA hand–held tester to erase the codes. (See the OBD II scan tool’s instruction book for operating instructions.)

(2) Disconnecting the battery terminals or EFI fuse.

NOTICE:

If the TOYOTA hand–held tester switches the ECM from normal mode to check mode or vice–versa, or if the ignition switch is turned from ON to ACC or LOCK during check mode, the DTC and freezed frame data will be erased.

4. FAIL–SAFE CHART

If any of the following codes is recorded, the ECM enters fail–safe mode.

DTC No.	Fail–Safe Operation	Fail–Safe Deactivation Conditions
P0105	Ignition timing fixed at 5° BTDC	Returned to normal condition
P0110	Intake air temp. is fixed at 20°C (68°F)	Returned to normal condition
P0115	Engine coolant temp. is fixed at 80°(176°F)	Returned to normal condition
P0120	VTA is fixed at 0°	The following condition must be repeated at least 2 times consecutively When closed throttle position switch is ON 0.1 V ≦ VTA ≦ 0.95 V
P0141	The heater circuit in witch an abnormality is detected is turned off	Ignition switch OFF
P0325	Max. timing retardation	Ignition switch OFF
P1300	Fuel cut	IGF signal is detected for 4 consecutive ignitions

5. CHECK FOR INTERMITTENT PROBLEMS

TOYOTA hand–held tester only:

By putting the vehicle's ECM in check mode, 1 trip detection logic is possible instead of 2 trip detection logic and sensitivity to detect open circuits is increased. This makes it easier to detect intermittent problems.

(1) Clear the DTC (See page DI–14).
(2) Set check mode (See page DI–14).
(3) Perform a simulation test (See page IN–27).
(4) Connector connection and terminal inspection (See page IN–27)
(5) Visual check and contact pressure (See page IN–27).
(6) Connector handling (See page IN–27).

6. BASIC INSPECTION

When the malfunction code is not confirmed in the DTC check, troubleshooting should be performed in the order for all possible circuits to be considered as the causes of the problems.

In many cases, by carrying out the basic engine check shown in the following flow chart, the location causing the problem can be found quickly and efficiently. Therefore, use of this check is essential in engine trouble-shooting.

1	**Is battery positive voltage 11 V or more when engine is stopped ?**

NO → **Charge or replace battery.**

YES

2	**Is engine cranked ?**

NO → **Proceed to STARTING SYSTEM and continue to troubleshoot.**

YES

3	**Does engine start ?**

NO → **Go to step 7.**

YES

4	**Check air filter.**

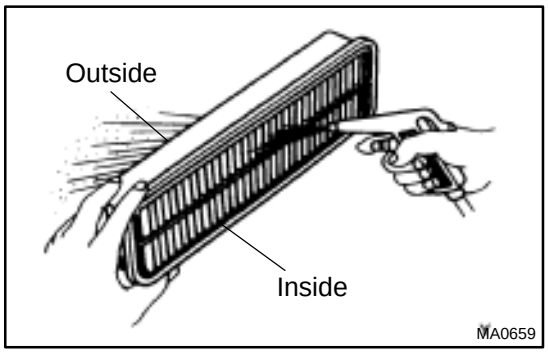

PREPARATION:
Remove the air filter.
CHECK:
Visual check that the air cleaner element is not excessively dirty or oily.
HINT:
If necessary, clean the filter with compressed air. First blow from inside thoroughly, then blow from outside of filter.

NG → **Repair or replace.**

OK

5	**Check engine idle speed.**

PREPARATION:
(a) Warm up engine to normal operating temperature.
(b) Switch off all accessories.
(c) Switch off air conditioning.
(d) Shift transmission into ”N” position.
(e) Remove the fuse cover on the instrument panel.
(f) Connect the OBD II scan tool or TOYOTA hand–held tester to DLC3 on the vehicle.

CHECK:
Use CURRENT DATA to check the engine idle speed.

OK:
Idle speed: 700 – 800 rpm

NG → **Proceed to matrix chart of problem symptoms on page DI–20**

OK

6	Check ignition timing.

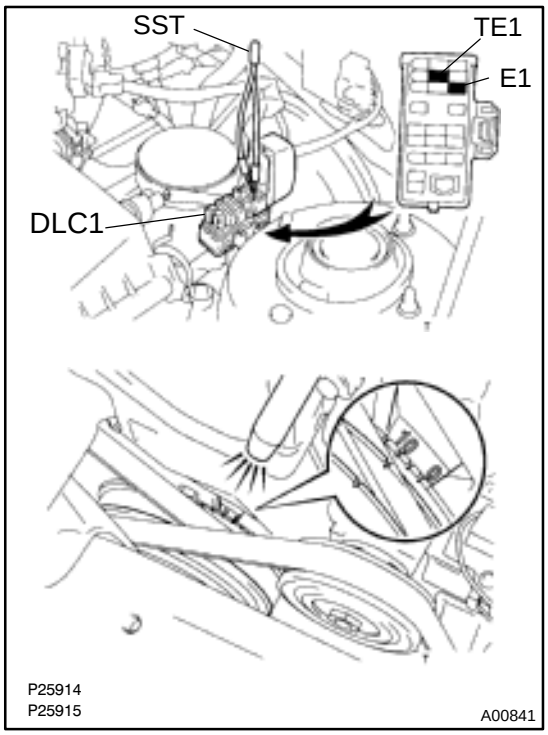

PREPARATION:

(a) Warm up engine to normal operating temperature.
(b) Shift transmission into ”N” position.
(c) Keep the engine speed at idle.
(d) Using SST, connect terminals TE1 and E1 of DLC1.
SST 09843–18020
(e) Using a timing light, connect the tester to No.1 high–tension cord.

CHECK:

Check ignition timing.

OK:

Ignition timing: 10˚ BTDC at idle

NG → **Proceed to page IG–1 and continue to troubleshoot.**

OK →

Proceed to matrix chart of problem symptoms on page DI–20.

7	Check fuel pressure.

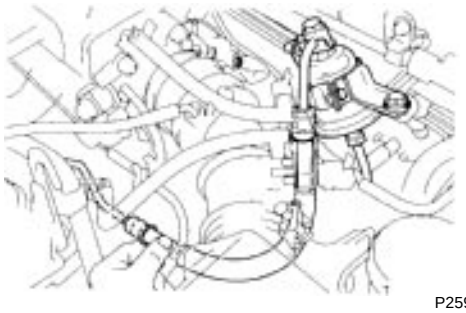
P25916

PREPARATION:

(a) Be sure that enough fuel is in the tank.
(b) Turn ignition switch ON.
(c) Remove the fuse cover on the instrument panel.
(d) Connect the TOYOTA hand–held tester to the DLC3 on the vehicle.
(e) Use ACTIVE TEST mode to operate the fuel pump.
(f) If you have no TOYOTA hand–held tester, connect the positive (+) and negative (–) leads from the battery to the fuel pump connector (See page SF–1).

CHECK:

Check for fuel pressure in the inlet hose when it is pinched off.
HINT:
At this time, you will hear a fuel flowing noise.

NG → **Proceed to page SF–1 and continue to trouble-shoot.**

OK

8	Check for spark.

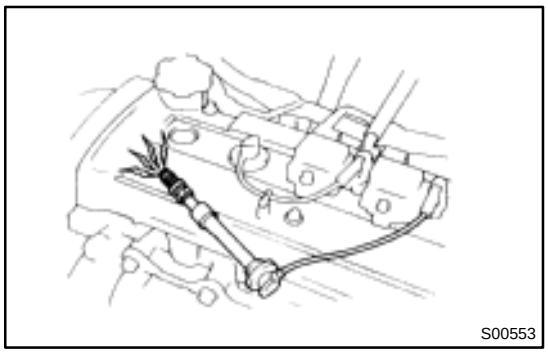
S00553

PREPARATION:

(a) Disconnect the high–tension cord from spark plug or remove the ignition coil.
(b) Remove spark plug.
(c) Install spark plug to high–tension cord or ignition coil.
(d) Disconnect injector connector.
(e) Hold the end about 12.5 mm (0.5 in.) from the ground.

CHECK:

Check if spark occurs while engine is being cranked.

NOTICE:

To prevent excess fuel being injected from the injectors during this test, don't crank the engine for more than 5 – 10 seconds at a time.

NG → **Proceed to page IG–1 and continue to troubleshoot.**

OK

Proceed to matrix chart of problem symptoms on page DI–20.

7. ENGINE OPERATING CONDITION

NOTICE:

The values given below for ”Normal Condition” are representative values, so a vehicle may still be normal even if its value from those listed here. So do not decide whether a part is faulty or not solely according to the ”Normal Condition” here.

(a) CARB mandated signals.

TOYOTA hand–held tester display	Measurement Item	Normal Condition*1
FUEL SYS #1	Fuel System Bank 1 OPEN: Air–fuel ratio feedback stopped CLOSED: Air–fuel ratio feedback operating	Idling after warming up: CLOSED
CALC LOAD	Calculator Load: Current intake air volume as a proportion of max. intake air volume	Idling: 19.7 – 47.4 % Racing without load (2,500rpm): 18.8 – 46.4 %
COOLANT TEMP.	Engine Coolant Temp. Sensor Value	After warming up: 80 – 95°C (176 – 203°F)
SHORT FT #1	Short–term Fuel Trim Bank 1	0 ± 20%
LONG FT #1	Long–term Fuel Trim Bank 1	0 ± 20%
ENGINE SPD	Engine Speed	Idling: 750 ± 50 rpm
VEHICLE SPD	Vehicle Speed	Vehicle Stopped: 0 km/h (0 mph)
IGN ADVANCE	Ignition Advance: Ignition Timing of Cylinder No. 1	Idling: BTDC 7 – 14°
INTAKE AIR	Intake Air Temp. Sensor Value	Equivalent to Ambient Temp.
MAP	Absolute Pressure inside Intake Manifold	Idling: 20 – 48 kPa Racing without load (2,500 rpm): 19 – 47 kPa
THROTTLE POS	Voltage Output of Throttle Position Sensor Calculated as a percentage: 0 V → 0%, 5 V → 100%	Throttle Fully Closed: 6 – 16 % Throttle Fully Open: 64 – 98 %
O2S B1, S1	Voltage Output of Oxygen Sensor Bank 1, Sensor 1	Idling: 0.1 – 0.9 V
O2FT B1, S1	Oxygen Sensor Fuel Trim Bank 1, Sensor 1 (Same as SHORT FT #1)	0 ± 20 %
O2S B1, S2	Voltage Output of Heated Oxygen Sensor Bank 1, Sensor 2	Driving at 50 km/h (31 mph): 0.1 – 0.9 V

*: If no conditions are specifically stated for ”Idling”, it means the shift lever is at N or P position, the A/C switch is OFF and all accessory switches are OFF.

(b) TOYOTA Enhanced Signals.

TOYOTA hand–held tester display	Measurement Item	Normal Condition*
MISFIRE RPM	Engine RPM for first misfire range	Misfire 0: 0 rpm
MISFIRE LOAD	Engine load for first misfire range	Misfire 0: 0 g/r
INJECTOR	Fuel injection time for cylinder No.1	Idling: 2.66 – 3.9 ms
IAC DUTY RATIO	Intake Air Control Valve Duty Ratio Opening ratio rotary solenoid type IAC valve	Idling: 25.5 – 46 %
STARTER SIG	Starter Signal	Cranking: ON
CTP SIG	Closed Throttle Position Signal	Throttle Fully Closed: ON
A/C SIG	A/C Switch Signal	A/C ON: ON
PNP SIG	Park/Neutral Position Switch Signal	P or N position: ON
FC IDL	Fuel Cut Idle: Fuel cut when throttle valve fully closed, during deceleration	Fuel cut operating: ON
FC TAU	Fuel Cut TAU: Fuel cut during very light load	Fuel cut operating: ON
CYL#1, CYL#2, CYL#3, CYL#4	Abnormal revolution variation for each cylinder	0%
IGNITION	Total number of ignitions for every 1,000 revolutions	0 – 2,000 rpm
FUEL PUMP	Fuel Pump Signal	Idling: ON
TOTAL FT B1	Total Fuel Trim Bank 1: Average value for fuel trim system of bank 1	Idling: 0.8 – 1.2 V
O2 LR B1, S1	Oxygen Sensor Lean Rich Bank 1, Sensor 1 Response time for oxygen sensor output to switch from lean to rich	Idling after warmed up: 0 – 1,000 msec.
O2 RL B1, S1	Oxygen Sensor Rich Lean Bank 1, Sensor 1 Response time for oxygen sensor output to switch from rich to lean	Idling after warmed up: 0 – 1,000 msec.

*: If no conditions are specifically stated for ”Idling”, it means the shift lever is at N or P position, the A/C switch is OFF and all accessory switches are OFF.

DI4NN–01

PROBLEM SYMPTOMS TABLE

Symptom	Suspect Area	See page
Does not start (Engine does not crank)	1. Starter 2. Starter relay	ST–14 ST–30 ST–33
Does not start (No combustion)	1. ECM power source circuit 2. Fuel pump control circuit	DI–112 DI–115
Does not start (No complete combustion)	1. Fuel pump control circuit	DI–115
Difficult to start (Engine cranks normally)	1. Starter signal circuit 2. Fuel pump control circuit 3. Compression	DI–109 DI–115 EM–3
Difficult to start (Cold engine)	1. Starter signal circuit 2. Fuel pump control circuit	DI–109 DI–115
Difficult to start (Hot engine)	1. Starter signal circuit 2. Fuel pump control circuit	DI–109 DI–115
Poor idling (High engine idle speed)	1. A/C switch circuit 2. ECM power source circuit	AC–3 DI–112
Poor idling (Low engine idle speed)	1. A/C switch circuit 2. Fuel pump control circuit	AC–3 DI–115
Poor idling (Rough idling)	1. Compression 2. Fuel pump control circuit	EM–3 DI–115
Poor idling (Hunting)	1. ECM power source circuit 2. Fuel pump control circuit	DI–112 DI–115
Poor driveability (Hesitation/Poor acceleration)	1. Fuel pump control circuit 2. A/T faulty 3. A/C cut control circuit	DI–115 DI–140 DI–121
Poor driveability (Surging)	1. Fuel pump control circuit	DI–115
Engine stall (Soon after starting)	1. Fuel pump control circuit	DI–115
Engine stall (During A/C operation)	1. A/C signal circuit 2. Engine control module (ECM)	AC–69 IN–27

DI4NM–01

TERMINALS OF ECM

ECM Terminals

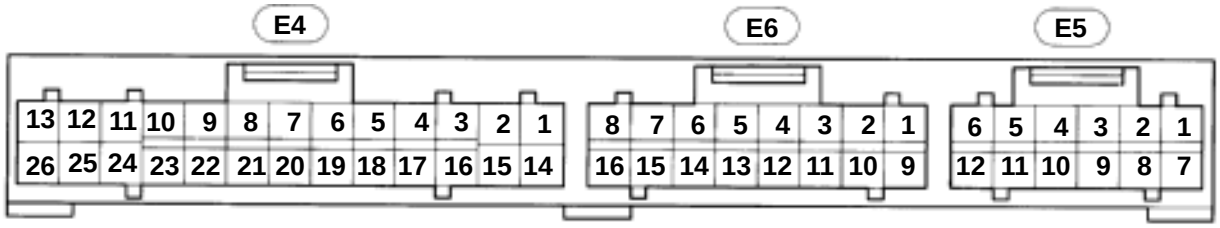

S03523

Symbols (Terminals No.)	Wiring Color	Condition	STD Voltage (V)
BATT (E5 – 2) – E1 (E4 – 26)	Y – R ↔ BR	Always	9 – 14
+ B (E5 – 7) – E1 (E4 – 26)	B – R ↔ BR	IG switch ON	9 – 14
VC (E6 – 11) – E2 (E6 – 9)	LG – R ↔ BR	IG switch ON	4.5 – 5.5
VTA (E6 – 10) – E2 (E6 – 9)	Y – G ↔ BR	IG switch ON Throttle valve fully closed	0.3 – 1.0
		IG switch ON Throttle valve fully open	3.2 – 4.9
PIM (E6 – 2) – E2 (E6 – 9)	P ↔ BR	IG switch ON	3.3 – 3.9
		Apply vacuum 26.7 kPa (200 mmHg, 7.9 in.Hg)	2.5 – 3.1
THA (E6 – 3) – E2 (E6 – 9)	L – B ↔ BR	Idling, Intake air temp. 20˚C (68˚ F)	0.5 – 3.4
THW (E6 – 4) – E2 (E6 – 9)	R – B ↔ BR	Idling, Engine coolant temp. 80˚C (176˚F)	0.2 – 1.0
STA (E4 – 2) – E1 (E4 – 26)	B –W ↔ BR	Cranking	6.0 or more
#10 (E4 – 12) – E1 (E4 – 13)	G ↔ BR	IG switch ON	9 – 14
		Idling	Pulse generation (See page DI–54)
#20 (E4 – 25) – E1 (E4 – 13)	Y ↔ BR	IG switch ON	9 – 14
		Idling	Pulse generation (See page DI–54)
#30 (E4 – 11) – E1 (E4 – 13)	R ↔ BR	IG switch ON	9 – 14
		Idling	Pulse generation (See page DI–54)
#40 (E4 – 24) – E01 (E4 – 13)	L ↔ BR	IG switch ON	9 – 14
		Idling	Pulse generation (See page DI–54)
IGT1 (E4 – 1) – E1 (E4 – 26)	GR ↔ BR	Idling	Pulse generation (See page DI–95)
IGT2 (E4 – 14) – E1 (E4 – 26)	L – Y ↔ BR	Idling	Pulse generation (See page DI–95)
IGF (E4 – 7) – E1 (E4 – 26)	R – L ↔ BR	IG switch ON, Disconnect igniter connector	4.5 – 5.5
		Idling	Pulse generation (See page DI–95)
G2 (E4 – 18) – NE ⊖ (E4 – 17)	R ↔ G	Idling	Pulse generation (See page DI–62)
NE (E4 – 4) – NE ⊖ (E4 – 26)	B ↔ G	Idling	Pulse generation (See page DI–62)
FC (E5 – 4) – E1 (E4 – 26)	G – B ↔ BR	IG switch ON	9 – 14
EVP (E6 – 7) – E1 (E4 – 26)	L – W ↔ BR	IG switch ON	9 – 14

Symbols (Terminals No.)	Wiring Color	Condition	STD Voltage (V)
RSC (E4 – 9) – E1 (E4 – 26)	L – W ↔ BR	IG switch ON Disconnect ”E4” of ECM connector	9 – 14
RSC (E4 – 9) – E1 (E4 – 26)	L ↔ BR	IG switch ON Disconnect ”E4” of ECM connector	9 – 14
OX1 (E6 – 6) – E1 (E4 – 26)	B ↔ BR	Maintain engine speed at 2,500 rpm for 2 min. after warming up	Pulse generation (See pageDI–50)
OX2 (E6 – 5) – E1 (E4 – 26)	W ↔ BR	Maintain engine speed at 2,500 rpm for 2 min. after warming up	Pulse generation
HT2 (E4 – 21) – E03 (E6 – 16)	W – R ↔ BR	Idling	Below 3.0
		IG switch ON	9 – 14
KNK (E6 – 14) – E1 (E4 – 26)	B ↔ BR	Idling	Pulse generation (See pageDI–67)
NSW (E4 – 15) – E1 (E4 – 26)	B – W ↔ BR (M/T)	IG switch ON Other shift position in ”P” or ”N” position	9 – 14
		IG switch ON Shift position in ”P” or ”N” position	0 – 3.0
NSW (E4 – 15) – E1 (E4 – 26)	B ↔ BR (A/T)	IG switch ON Other shift position in ”P” or ”N” position	9 – 14
		IG switch ON Shift position in ”P” or ”N” position	0 – 3.0
SPD (E5 – 11) – E1 (E4 – 26)	G ↔ BR	IG switch ON Rotate driving wheel slowly	Pulse generation (See pageDI–89)
TE1 (E6 – 15) – E1 (E4 – 26)	Y ↔ BR	IG switch ON	9 – 14
W (E5 – 8) – E1 (E4 – 26)	GR–L ↔ BR	Idling	9 – 14
		IG switch ON	Below 3.0
AC1 (E5 – 10) – E1 (E4 – 26)	LG – B ↔ BR	Idling, A/C switch ON	Below 2.0
		Idling, A/C switch OFF	9 – 14
ACT (E5 – 6) – E1(E4 – 26)	L ↔ BR	Idling, A/C switch ON	9 – 14
		Idling, A/C switch OFF	Below 2.0
TPC (E6 – 8) – E1 (E4 – 26)	G – Y ↔ BR	IG switch ON	9 – 14
PTNK (E6 – 12) – E2 (E6 – 9)	Y – B ↔ BR	IG switch ON	2.9 – 3.7
		Apply vacuum (less than 66.7 kPa, 500 mmHg, 19.7 in.Hg)	Below 0.5
SIL (E6 – 13) – E1 (E4 – 26)	W ↔ BR	During transmission	Pulse generation
STP (E6 – 1) – E1 (E4 – 26)	G – W ↔ BR	IG switch ON, Brake pedal depressed	7.5 – 14
		IG switch ON, Brake pedal released	Below 1.5

DI4PQ–01

CIRCUIT INSPECTION

DTC	11	Short in Squib Circuit (to Ground)

CIRCUIT DESCRIPTION

The squib circuit consists of the airbag sensor assembly, spiral cable, steering wheel pad and front passenger airbag assembly. If causes the SRS to deploy when the SRS deployment conditions are satisfied.
For details of the function of each component, see FUNCTION OF COMPONENTS on page RS–2.
DTC 11 is recorded when ground short is detected in the squib circuit.

DTC No.	DTC Detecting Condition	Trouble Area
11	• Short circuit in squib wire harness (to ground). • Squib malfunction. • Spiral cable malfunction. • Airbag sensor assembly malfunction.	• Steering wheel pad (D squib) • Front passenger airbag assembly (P squib) • Spiral cable • Airbag sensor assembly • Wire harness

WIRING DIAGRAM

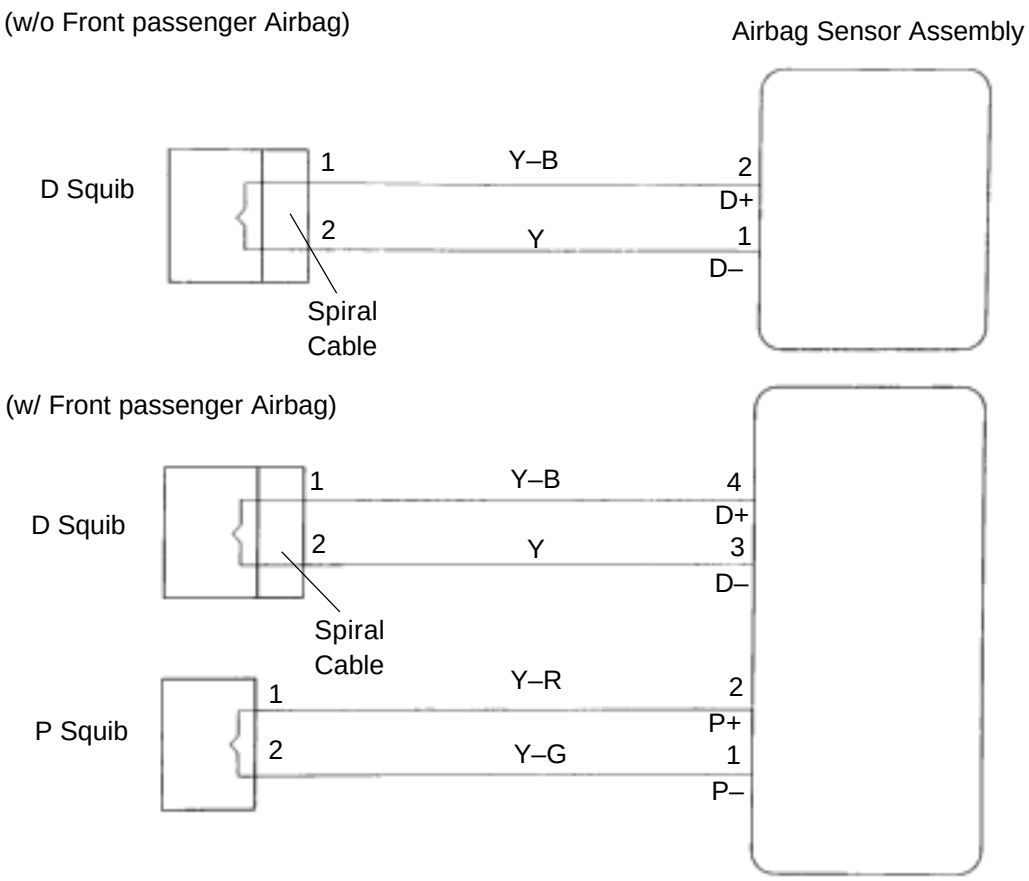

R15075

INSPECTION PROCEDURE

1	**Preparation. (See step 1 on page DI–252)**

2	**Check D squib circuit.**

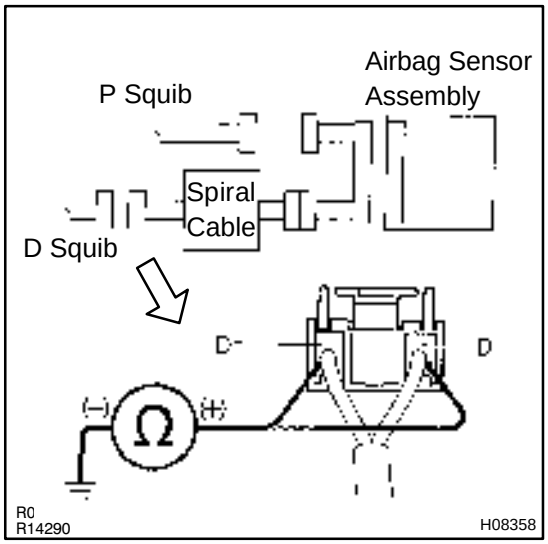

CHECK:

For the connector (on the spiral cable side) between the spiral cable and steering wheel pad, measure the resistance between D^+, D^- and body ground.

OK:

Resistance: 1 MΩ or Higher

NG → **Go to step 7.**

OK

(w/ Front Passenger Airbag) Go to step 3.
(w/o Front Passenger Airbag) Go to step 4.

3	Check P squib circuit.

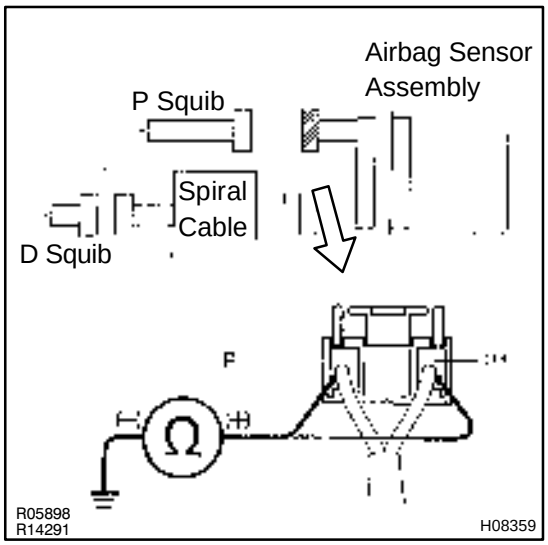

CHECK:

For the connector (on the airbag sensor assembly side) between the airbag sensor assembly and front passenger airbag assembly, measure the resistance between P+, P– and body ground.

OK:

Resistance: 1 MΩ or Higher

NG → **Repair or replace harness or connector between the airbag sensor assembly and front passenger airbag assembly.**

OK

4	**Check airbag sensor assembly.**

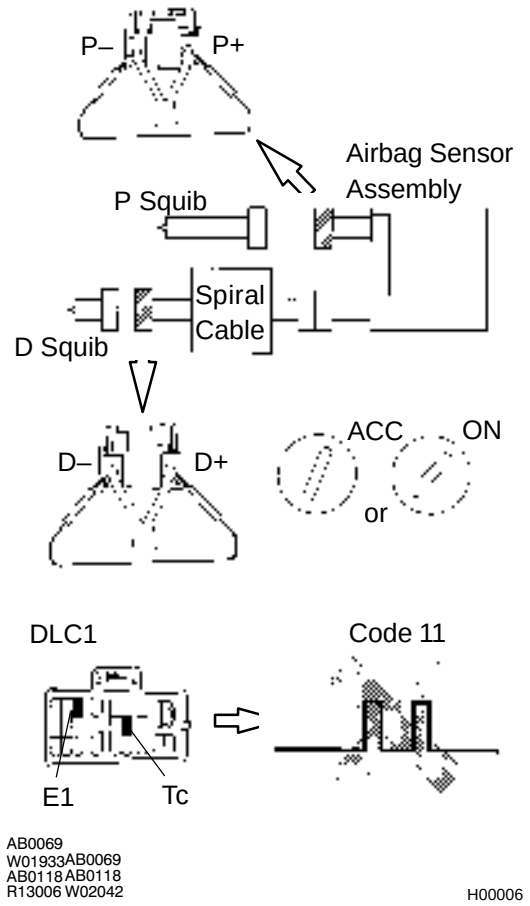

AB0069
W01933AB0069
AB0118AB0118
R13006 W02042

H00006

PREPARATION:

(a) Connect connector to airbag sensor assembly.
(b) Using a service wire, connect D^+ and D^- on spiral cable side of connector between spiral cable and steering wheel pad.
(c) Using a service wire, connect P^+ and P^- on airbag sensor assembly side of connector between airbag sensor assembly and front passenger airbag assembly.
(d) Connect negative (–) terminal cable to battery, and wait at least 2 seconds.

CHECK:

(a) Turn ignition switch to ACC or ON and wait at least 20 seconds.
(b) Clear malfunction code stored in memory.
(See page DI–211)
(c) Turn ignition switch to LOCK, and wait at least 20 seconds.
(d) Turn ignition switch to ACC or ON, and wait at least 20 seconds.
(e) Using SST, connect terminals Tc and E1 of DLC 1.
SST 09843–18020
(f) Check DTC.

OK:

DTC 11 is not output.

HINT:
Codes other than code 11 may be output at this time, but they are not relevant to this check.

NG → **Replace airbag sensor assembly.**

OK

5	Check D squib.

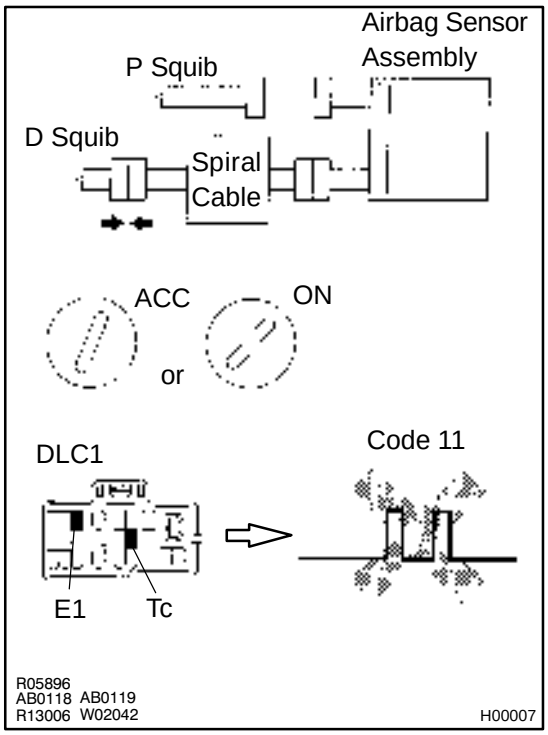

PREPARATION:

(a) Turn ignition switch to LOCK.
(b) Disconnect negative (–) terminal cable from the battery, and wait at least 90 seconds.
(c) Connect steering wheel pad connector.
(d) Connect negative (–) terminal cable to the battery, and wait at least 2 seconds.

CHECK:

(a) Turn ignition switch to ACC or ON, and wait at least 20 seconds.
(b) Clear malfunction code stored in memory.
(See page DI–211)
(c) Turn ignition switch to LOCK, and wait at least 20 seconds.
(d) Turn ignition switch to ACC or ON, and wait at least 20 seconds.
(e) Using SST, connect terminals Tc and E1 of DLC 1.
SST 09843–18020
(f) Check DTC.

OK:

DTC 11 is not output.

HINT:
Codes other than code 11 may be output at this time, but they are not relevant to this check.

NG → **Replace steering wheel pad.**

OK

(w/ Front Passenger Airbag) Go to step 6.
(w/o Front Passenger Airbag) Go to the next step 6.

6	Check P squib.

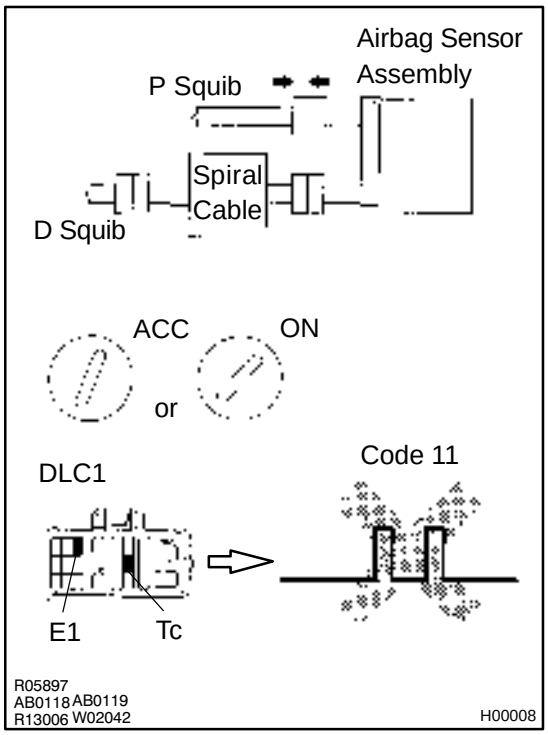

PREPARATION:

(a) Turn ignition switch to LOCK.
(b) Disconnect negative (–) terminal cable from the battery, and wait at least 90 seconds.
(c) Connect front passenger airbag assembly connector.
(d) Connect negative (–) terminal cable to battery, and wait at least 2 seconds.

CHECK:

(a) Turn ignition switch to ACC or ON, and wait at least 20 seconds.
(b) Clear malfunction code stored in memory.
(See page DI–211)
(c) Turn ignition switch to LOCK, and wait at least 20 seconds.
(d) Turn ignition switch to ACC or ON, and wait at least 20 seconds.
(e) Using SST, connect terminals Tc and E1 of DLC 1.
SST 09843–18020
(f) Check DTC.

OK:

DTC 11 is not output.

HINT:
Codes other than code 11 may be output at this time, but they are not relevant to this check.

NG → **Replace front passenger airbag assembly.**

OK →

From the results of the above inspection, the malfunctioning part can now be considered normal. To make sure of this, use the simulation method to check. If the malfunctioning part can not be detected by the simulation method, replace all SRS components including the wire harness.

7	Check spiral cable.

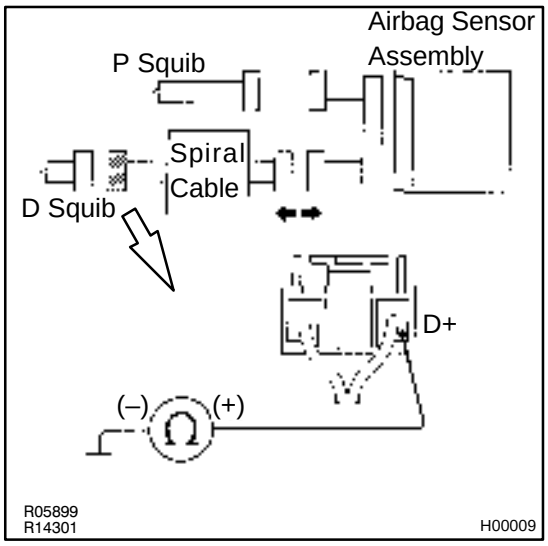

PREPARATION:

Disconnect connector between airbag sensor assembly and spiral cable.

CHECK:

Measure resistance between D^+ on spiral cable side of connector between spiral cable and steering wheel pad and body ground.

OK:

Resistance: 1 MΩ or Higher

NG → **Repair or replace spiral cable.**

OK

Repair or replace harness or connector between airbag sensor assembly and spiral cable.

DI4PR–01

DTC	12	Short in Squib Circuit (to B+)

CIRCUIT DESCRIPTION

The squib circuit consists of the airbag sensor assembly, spiral cable, steering wheel pad and front passenger airbag assembly. It causes the SRS to deploy when the SRS deployment conditions are satisfied.
For details of the function of each components, see page FUNCTION OF COMPONENTS on page RS–2
DTC 12 is recorded when a B+ short is detected in the squib circuit.

DTC No.	DTC Detecting Condition	Trouble Area
12	• Short circuit in squib wire harness (to B+) • Squib malfunction • Spiral cable malfunction • Airbag sensor assembly malfunction	• Steering wheel pad (D squib) • Front passenger airbag assembly (P squib) • Spiral cable • Airbag sensor assembly • Wire harness

WIRING DIAGRAM

Refer to page DI–220 for the WIRING DIAGRAM.

INSPECTION PROCEDURE

1	**Preparation. (See step 1 on page DI–252)**

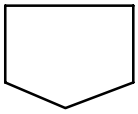

2	Check D squib circuit.

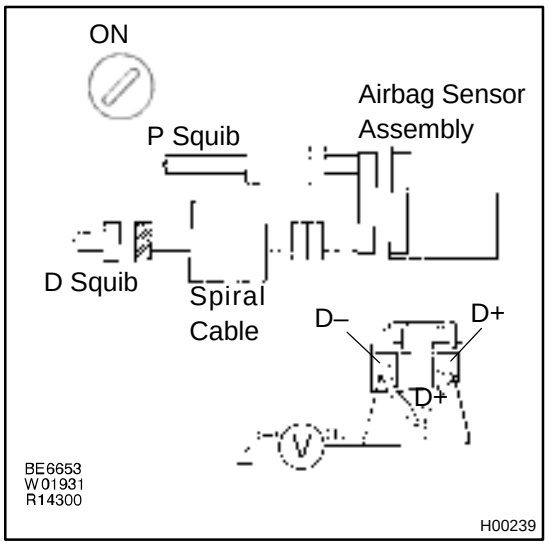

CHECK:

For the connector (on the spiral cable side) between the spiral cable and steering wheel pad, measure the voltage between D^+, D^- and body ground.

OK:

Voltage: 0 V

NG → **Go to step 7.**

OK

(w/ Front Passenger Airbag) Go to step 3.
(w/o Front Passenger Airbag) Go to step 4.

3	**Check P squib circuit.**

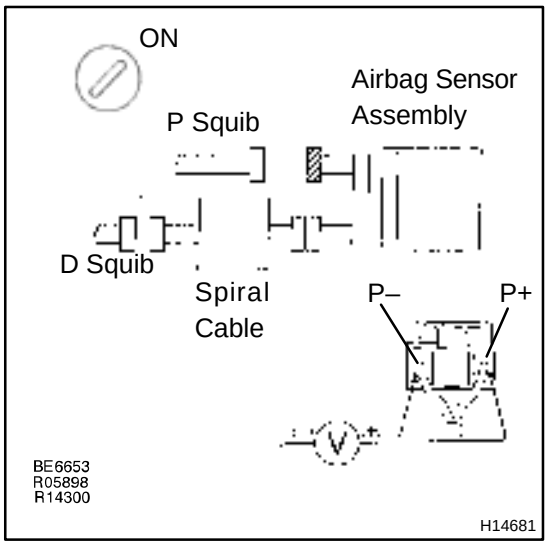

CHECK:

For the connector (on the airbag sensor assembly side) between airbag sensor assembly and front passenger airbag assembly, measure the voltage between P^+, P^- and body ground.

OK:

Voltage: 0V

NG → **Repair or replace harness or connector between the airbag sensor assembly and front passenger airbag assembly.**

OK

4	**Check airbag sensor assembly.**

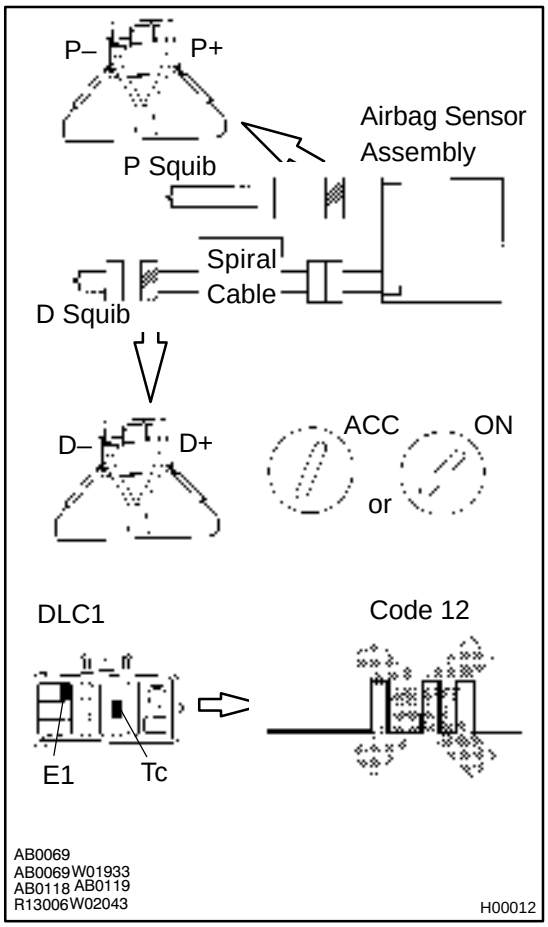

PREPARATION:

(a) Connect connector to airbag sensor assembly.

(b) Using a service wire, connect D^+ and D^- on spiral cable side of connector between spiral cable and steering wheel pad.

(c) Using a service wire, connect P^+ and P^- on airbag sensor assembly side of connector between airbag sensor assembly and front passenger airbag assembly.

(d) Connect negative (–) terminal cable to battery, and wait at least 2 seconds.

CHECK:

(a) Turn ignition switch to ACC or ON and wait at least 20 seconds.

(b) Clear malfunction code stored in memory.
(See page DI–211)

(c) Turn ignition switch to LOCK, and wait at least 20 seconds.

(d) Turn ignition switch to ACC or ON, and wait at least 20 seconds.

(e) Using SST, connect terminals Tc and E1 of DLC1.
SST 09843–18020

(f) Check DTC.

OK:

DTC 12 is not output.

HINT:
Codes other than code 12 may be output at this time, but they are not relevant to this check.

NG → **Replace airbag sensor assembly.**

OK

5	**Check D squib.**

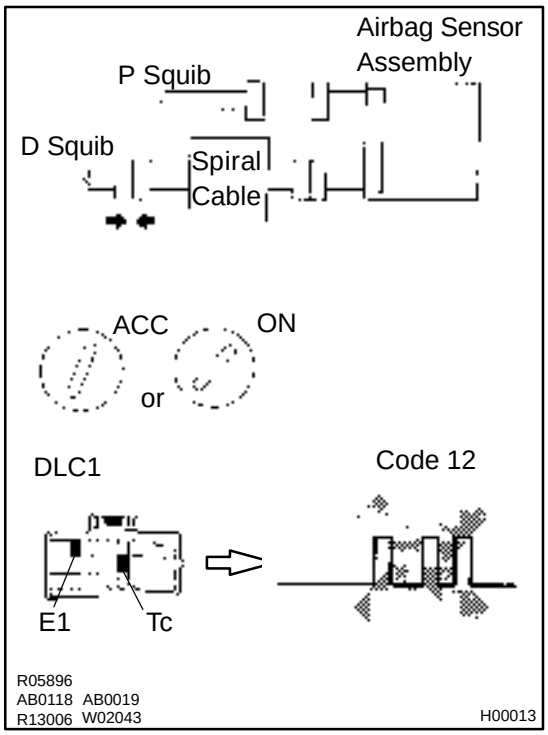

PREPARATION:

(a) Turn ignition switch to LOCK.
(b) Disconnect negative (–) terminal cable from the battery, and wait at least 90 seconds.
(c) Connect steering wheel pad connector.
(d) Connect negative (–) terminal cable to battery, and wait at least 2 seconds.

CHECK:

(a) Turn ignition switch to ACC or ON, and wait at least 20 seconds.
(b) Clear malfunction code stored in memory.
(See page DI–211)
(c) Turn ignition switch to LOCK, and wait at least 20 seconds.
(d) Turn ignition switch to ACC or ON, and wait at least 20 seconds.
(e) Using SST, connect terminals Tc and E1 of DLC1.
SST 09843–18020
(f) Check DTC.

OK:

DTC 12 is not output.

HINT:
Codes other than code 12 may be output at this time, but they are not relevant to this check.

NG → **Replace steering wheel pad.**

OK

(w/ Front Passenger Airbag) Go to step 6.
(w/o Front Passenger Airbag) Go to the next step 6.

6	Check P squib.

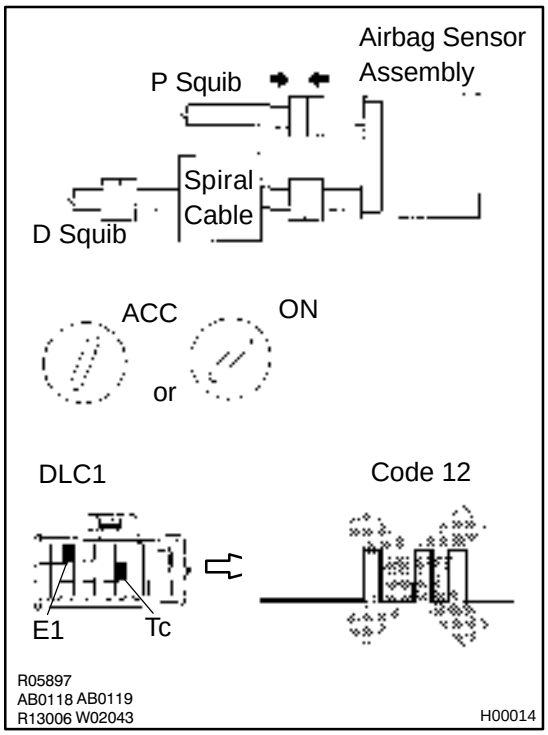

PREPARATION:

(a) Turn ignition switch to LOCK.
(b) Disconnect negative (–) terminal cable from the battery, and wait at least 90 seconds.
(c) Connect front passenger airbag assembly connector.
(d) Connect negative (–) terminal cable to battery, and wait at least 2 seconds.

CHECK:

(a) Turn ignition switch to ACC or ON, and wait at least 20 seconds.
(b) Clear malfunction code stored in memory.
(See page DI–211)
(c) Turn ignition switch to LOCK, and wait at least 20 seconds.
(d) Turn ignition switch to ACC or ON, and wait at least 20 seconds.
(e) Using SST, connect terminals Tc and E1 of DLC1.
SST 09843–18020
(f) Check DTC.

OK:

DTC 12 is not output.

HINT:
Codes other than code 12 may be output at this time, but they are not relevant to this check.

NG → **Replace front passenger airbag assembly.**

OK

From the results of the above inspection, the malfunctioning part can now be considered normal. To make sure of this, use the simulation method to check.

7	**Check spiral cable.**

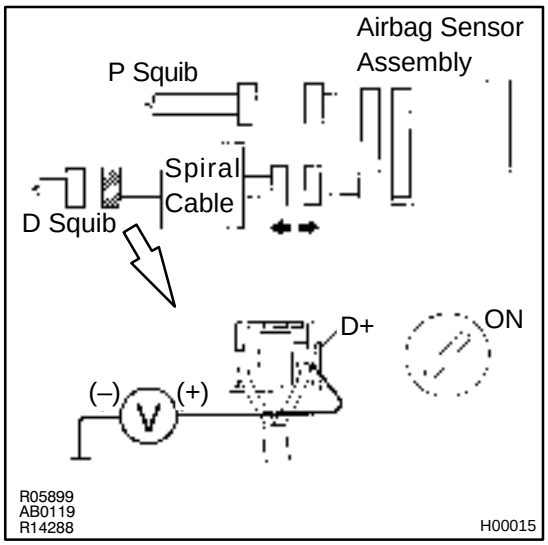

PREPARATION:

(a) Turn ignition switch to LOCK.
(b) Disconnect connector between airbag sensor assembly and spiral cable.
(c) Turn ignition switch ON.

CHECK:

Measure voltage at D^+ on spiral cable side of connector between spiral cable and steering wheel pad and body ground.

OK:

Voltage: 0 V

NG → **Repair or replace spiral cable.**

OK →

Repair or replace harness or connector between airbag sensor assembly and spiral cable.

DI4PS–01

DTC	13	Short in D Squib Circuit

CIRCUIT DESCRIPTION

The D squib circuit consists of the airbag sensor assembly, spiral cable and steering wheel pad. It causes the airbag to deploy when the airbag deployment conditions are satisfied.
For details of the function of each components, see FUNCTION OF COMPONENTS on page RS–2
DTC 13 is recorded when a short is detected in the D squib circuit.

DTC No.	DTC Detecting Condition	Trouble Area
13	• Short circuit between D^+ wire harness and D^- wire harness of squib • D squib malfunction • Spiral cable malfunction • Airbag sensor assembly malfunction	• Steering wheel pad (D squib) • Spiral cable • Airbag sensor assembly • Wire harness

WIRING DIAGRAM

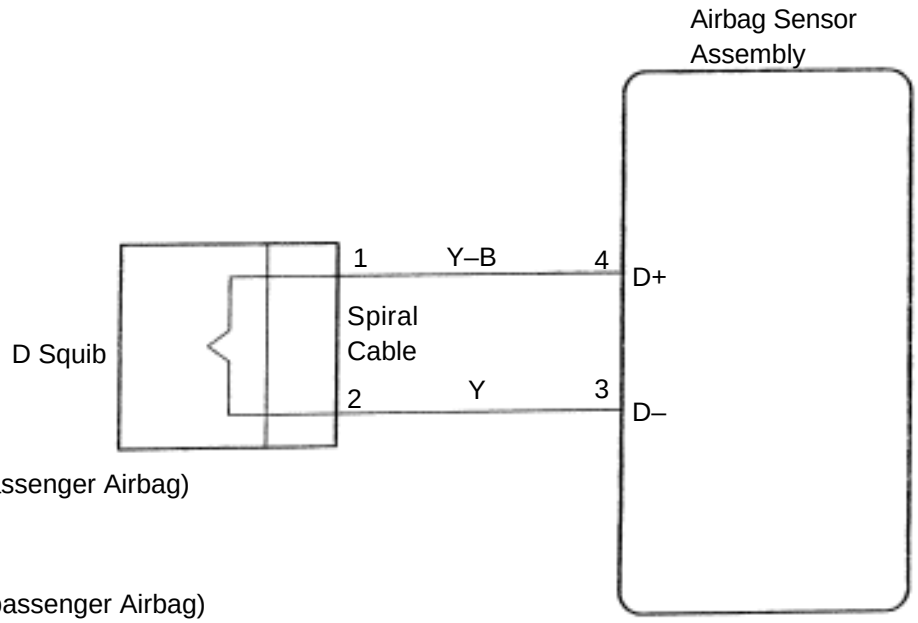

(w/ Front passenger Airbag)

*1: D+ –4
*2: D– –3

(w/o Front passenger Airbag)

*1: D+ –2
*2: D– –1

R15194

INSPECTION PROCEDURE

1	**Preparation. (See step 1 on page DI–252)**

2	Check D squib circuit.

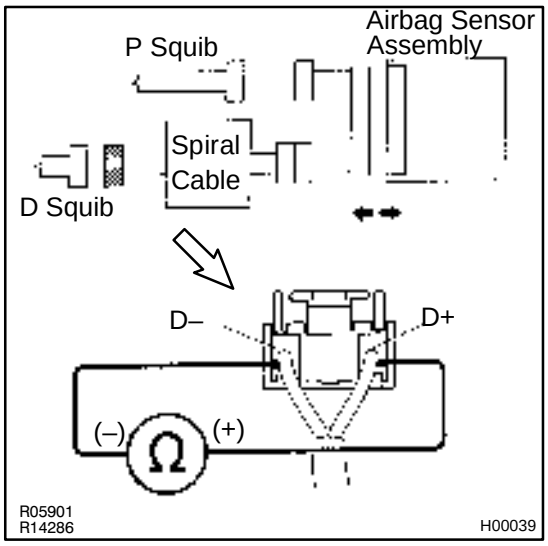

CHECK:

For the connector (on the spiral cable side) between the spiral cable and steering wheel pad, measure the resistance between D^+ and D^-.

OK:

Resistance: 1 MΩ or Higher

NG → **Go to step 5.**

OK

3	Check airbag sensor assembly.

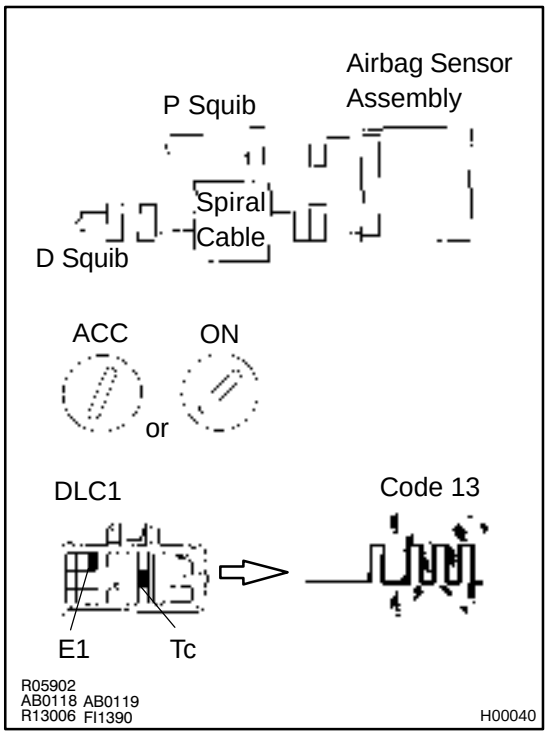

PREPARATION:

(a) Connect connector to the airbag sensor assembly.
(b) Connect negative (–) terminal cable to battery, and wait at least 2 seconds.

CHECK:

(a) Turn ignition switch to ACC or ON and wait at least 20 seconds.
(b) Clear malfunction code stored in memory.
(See page DI–211)
(c) Turn ignition switch to LOCK, and wait at least 20 seconds.
(d) Turn ignition switch to ACC or ON, and wait at least 20 seconds.
(e) Using SST, connect terminals Tc and E1 of DLC 1.
SST 09843–18020
(f) Check DTC.

OK:

DTC 13 is not output.

HINT:

Codes other than code 13 may be output at this time, but they are not relevant to this check.

NG → **Replace airbag sensor assembly.**

OK

4	**Check D squib.**

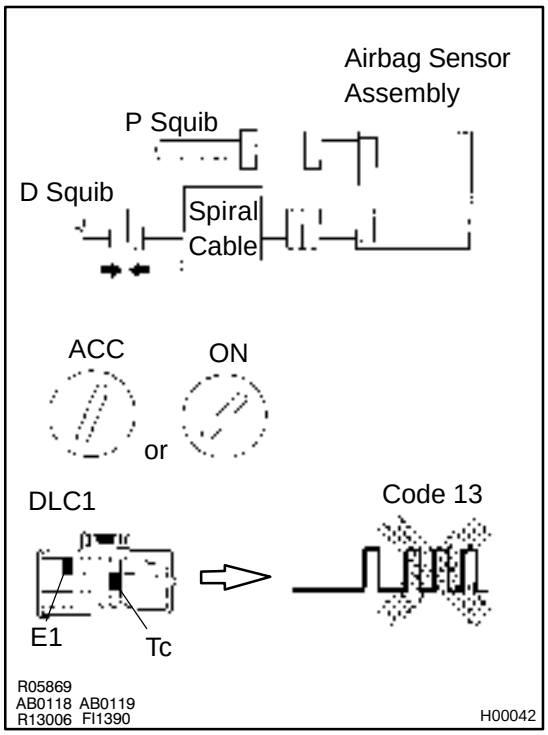

PREPARATION:

(a) Turn ignition switch to LOCK.
(b) Disconnect negative (–) terminal cable from the battery, and wait at least 90 seconds.
(c) Connect steering wheel pad connector.
(d) Connect negative (–) terminal cable to battery, and wait at least 2 seconds.

CHECK:

(a) Turn ignition switch to LOCK, and wait at least 20 seconds.
(b) Turn ignition switch to ACC or ON, and wait at least 20 seconds.
(c) Clear malfunction code stored in memory.
(See page DI–211)
(d) Turn ignition switch to LOCK, and wait at least 20 seconds.
(e) Turn ignition switch to ACC or ON, and wait at least 20 seconds.
(f) Using SST, connect terminals Tc and E1 of DLC 1.
SST 09843–18020
(g) Check DTC.

OK:

DTC 13 is not output.

HINT:
Codes other than code 13 may be output at this time, but they are not relevant to this check.

NG → **Replace steering wheel pad.**

OK

From the results of the above inspection, the malfunctioning part can now be considered normal. To make sure of this, use the simulation method to check.

5	Check spiral cable.

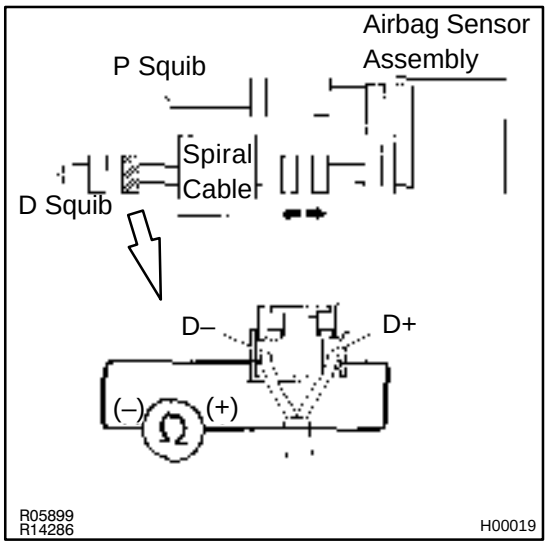

PREPARATION:

(a) Disconnect connector between airbag sensor assembly and spiral cable.

(b) Release airbag activation prevention mechanism on airbag sensor assembly side of airbag squib connector (See page DI–211).

CHECK:

For the connector (on the spiral cable side) between the spiral cable and steering wheel pad, measure the resistance between D^+ and D^-.

OK:OK:

Resistance: 1 MΩ or Higher

NG → **Repair or replace spiral cable.**

OK

6	Check harness between airbag sensor assembly and spiral cable.

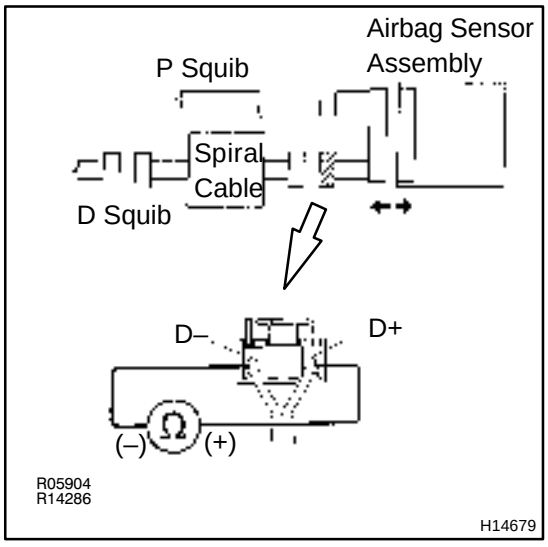

CHECK:

For the connector (on the airbag sensor assembly side) between the spiral cable and airbag sensor assembly, measure the resistance between D^+ and D^-.

OK:

Resistance: 1 MΩ or higher

NG → **Repair or replace harness or connector between airbag sensor assembly and spiral cable.**

OK

From the results of the above inspection, the malfunctioning part can now be considered normal. To make sure of this, use the simulation method to check.

DI4PT–01

DTC	14	Open in D Squib Circuit

CIRCUIT DESCRIPTION

The D squib circuit consists of the airbag sensor assembly, spiral cable and steering wheel pad.
It causes the airbag to deploy when the airbag deployment conditions are satisfied.
For details of the function of each components, see FUNCTION OF COMPONENTS on page RS–2
DTC 14 is recorded when an open is detected in the D squib circuit.

DTC No.	DTC Detecting Condition	Trouble Area
14	• Short circuit in D^+ wire harness or D^- wire harness of squib • D squib malfunction • Spiral cable malfunction • Airbag sensor assembly malfunction	• Steering wheel pad (D squib) • Spiral cable • Airbag sensor assembly • Wire harness

WIRING DIAGRAM

Refer to page DI–234 for the WIRING DIAGRAM.

INSPECTION PROCEDURE

1	Preparation. (See step 1 on page DI–252)

2	Check D squib circuit.

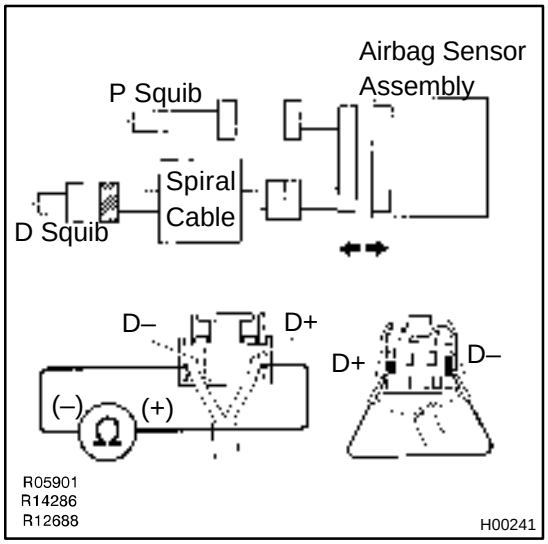

PREPARATION:
Using a service wire, connect D^+ and D^- on airbag sensor assembly connector.
CHECK:
For the connector (on the spiral cable side) between the spiral cable and steering wheel pad, measure the resistance between D^+ and D^-.
OK:
Resistance: Below 1 Ω

NG → **Go to step 5.**

OK

3	Check airbag sensor assembly.

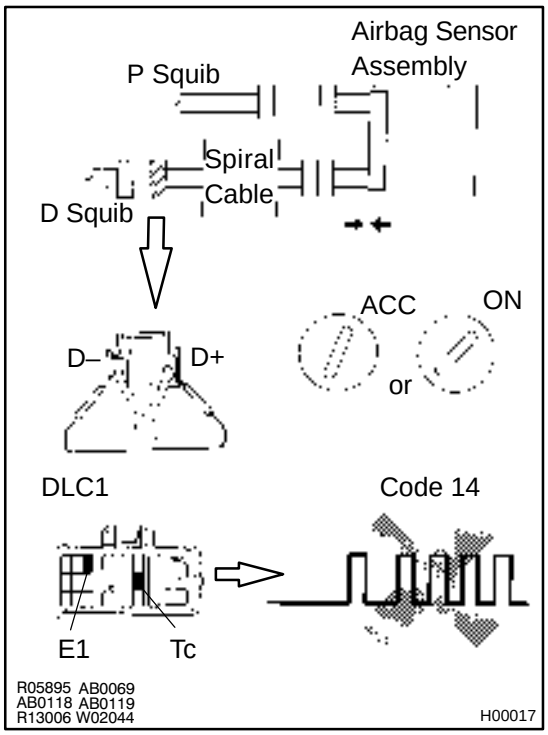

PREPARATION:

(a) Connect connector to airbag sensor assembly.

(b) Using a service wire, connect D^+ and D^- on spiral cable side of connector between spiral cable and steering wheel pad.

(c) Connect negative (–) terminal cable to battery, and wait at least 2 seconds.

CHECK:

(a) Turn ignition switch to ACC or ON and wait at least 20 seconds.

(b) Clear malfunction code stored on memory.
(See page DI–211)

(c) Turn ignition switch to LOCK, and wait at least 20 seconds.

(d) Turn ignition switch to ACC or ON, and wait at least 20 seconds.

(e) Using SST, connect terminals Tc and E1 of DLC 1.
SST 09843–18020

(f) Check DTC.

OK:

DTC 14 is not output.

HINT:
Codes other than code 14 may be output at this time, but they are relevant to this check.

NG → **Replace airbag sensor assembly.**

OK

4	**Check D squib.**

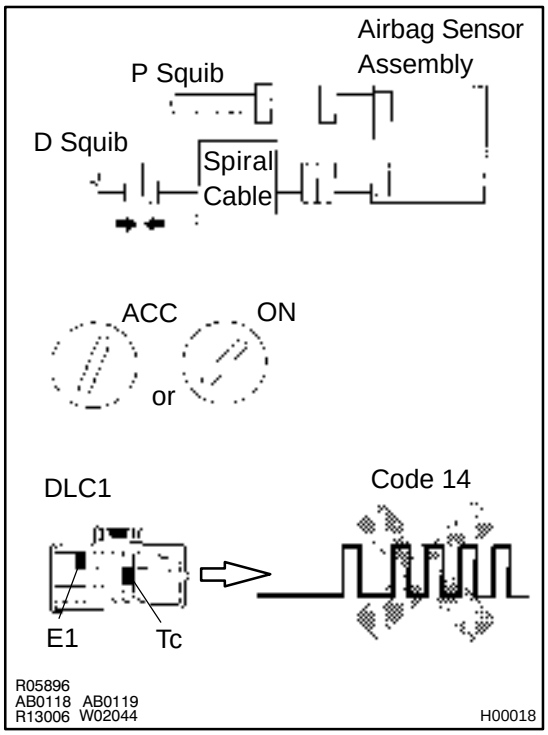

PREPARATION:

(a) Turn ignition switch to LOCK.
(b) Disconnect negative (–) terminal cable from the battery, and wait at least 90 seconds.
(c) Connect steering wheel pad connector.
(d) Connect negative (–) terminal cable to battery, and wait at least 2 seconds.

CHECK:

(a) Turn ignition switch to ACC or ON, and wait at least 20 seconds.
(b) Clear malfunction code stored in memory.
(See page DI–211)
(c) Turn ignition switch to LOCK, and wait at least 20 seconds.
(d) Turn ignition switch to ACC or ON, and wait at least 20 seconds.
(e) Using SST, connect terminals Tc and E1 of DLC 1.
SST 09843–18020
(f) Check DTC.

OK:

DTC 14 is not output.

HINT:
Codes other than code 14 may be output at this time, but they are not relevant to this check.

NG → **Replace steering wheel pad.**

OK

From the results of the above inspection, the malfunctioning part can now be considered normal. To make sure of this, use the simulation method to check.

5	Check spiral cable.

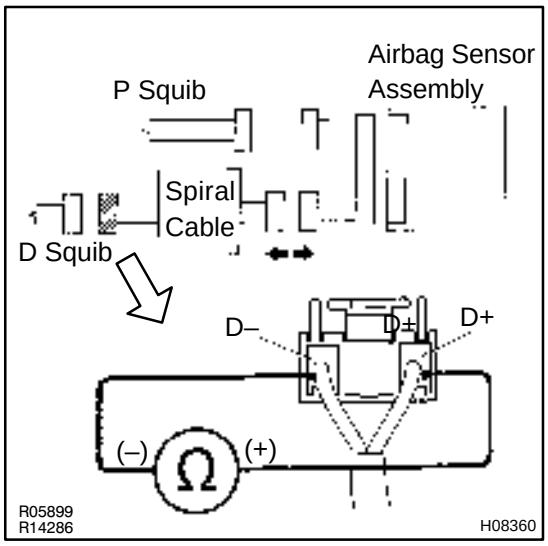

PREPARATION:
Disconnect connector between airbag sensor assembly and spiral cable.
CHECK:
For the connector (on the spiral cable side) between the spiral cable and steering wheel pad, measure the resistance between D^+ and D^-.
OK:
Resistance: Below 1 Ω

NG → **Repair or replace spiral cable.**

OK

6	Check harness between airbag sensor assembly and spiral cable.

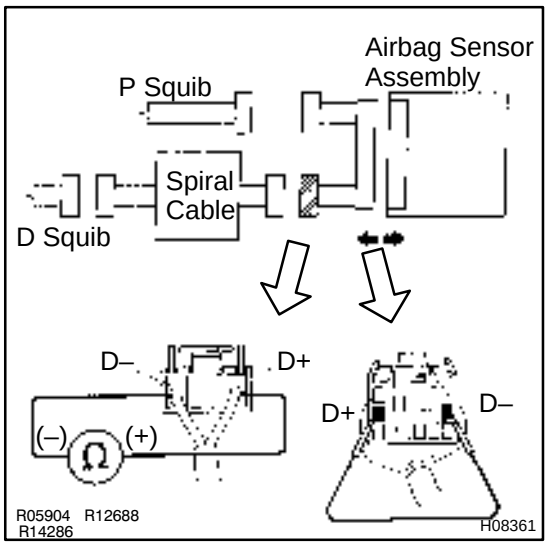

PREPARATION:
Using a service wire, connect D^+ and D^- on airbag sensor assembly connector.
CHECK:
For the connector (on the airbag sensor assembly side) between the airbag sensor assembly and spiral cable, measure the resistance between D^+ and D^-.
OK:
Resistance: Below 1 Ω

NG → **Repair or replace harness or connector between airbag sensor assembly and spiral cable.**

OK

From the results of the above inspection, the malfunctioning part can now be considered normal. To make sure of this, use the simulation method to check.

DI4PU–01

DTC	31	Airbag Sensor Assembly Malfunction

CIRCUIT DESCRIPTION

The airbag sensor assembly consists of a airbag sensor, safing sensor, drive circuit, diagnosis circuit and ignition control, etc.
It receives signals from the airbag sensor, judges whether or not the SRS must be activated, and diagnosis system malfunction.
DTC 31 is recorded when occurrence of a malfunction in the airbag sensor assembly is detected.

DTC No.	DTC Detecting Condition	Trouble Area
31	• Airbag sensor assembly malfunction	• Airbag sensor assembly

INSPECTION PROCEDURE

HINT:
When a malfunction code other than code 31 is displayed at the same time, first repair the malfunction indicated by the malfunction code other than code 31.

1	**Preparation. (See step 1 on page DI–252)**

2	**Check voltage at IG2 and ACC of airbag sensor assembly**

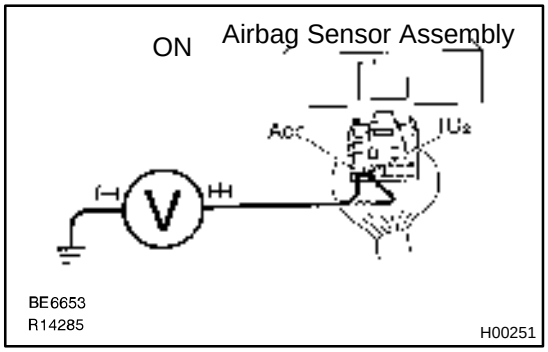

PREPARATION:
(a) Connect negative (–) terminal cable to battery.
(b) Turn ignition switch ON.

CHECK:
Measure voltage between terminals IG2 and ACC of airbag sensor assembly and body ground.

OK:
Voltage: Below 16 V

NG	**Check battery and charging system. (See page CH–2)**

OK

3	Is DTC 31 output again?

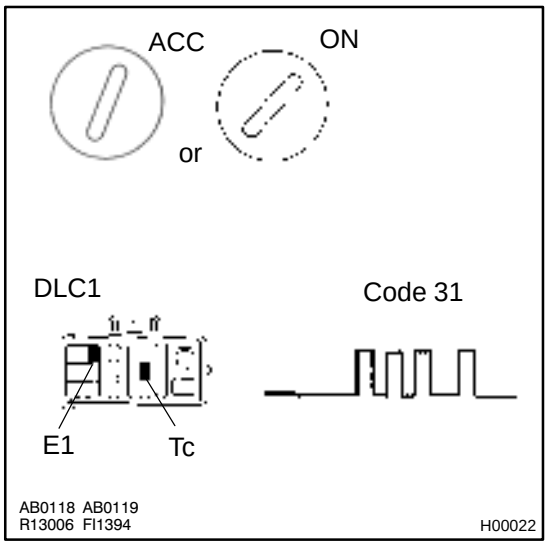

PREPARATION:

Clear malfunction code.

CHECK:

(a) Turn ignition switch to LOCK, and wait at least 20 seconds.

(b) Turn ignition switch to ACC or ON, and wait at least 20 seconds.

(c) Repeat operation in step (a) and (b) at least 5 times.

(d) Using SST, connect terminals Tc and E1 of DLC 1.
SST 09843–18020

(e) Check DTC.

NO → **Using simulation method, reproduce malfunction symptoms (See page IN–17)**

YES

Replace airbag sensor assembly.

DI4PV–01

DTC	53	Short in P Squib Circuit

CIRCUIT DESCRIPTION

The P squib circuit consists of the airbag sensor assembly and front passenger airbag assembly. It causes the airbag to deploy when the airbag deployment conditions are satisfied.
For details of the function of each components, see FUNCTION OF COMPONENTS on page RS–2
DTC 53 is recorded when a short is detected in the P squib circuit.

DTC No.	DTC Detecting Condition	Trouble Area
53	• Short circuit between P^+ wire harness or P^- wire harness of squib • P squib malfunction • Airbag sensor assembly malfunction	• Front passenger airbag assembly (P squib) • Airbag sensor assembly • Wire harness

WIRING DIAGRAM

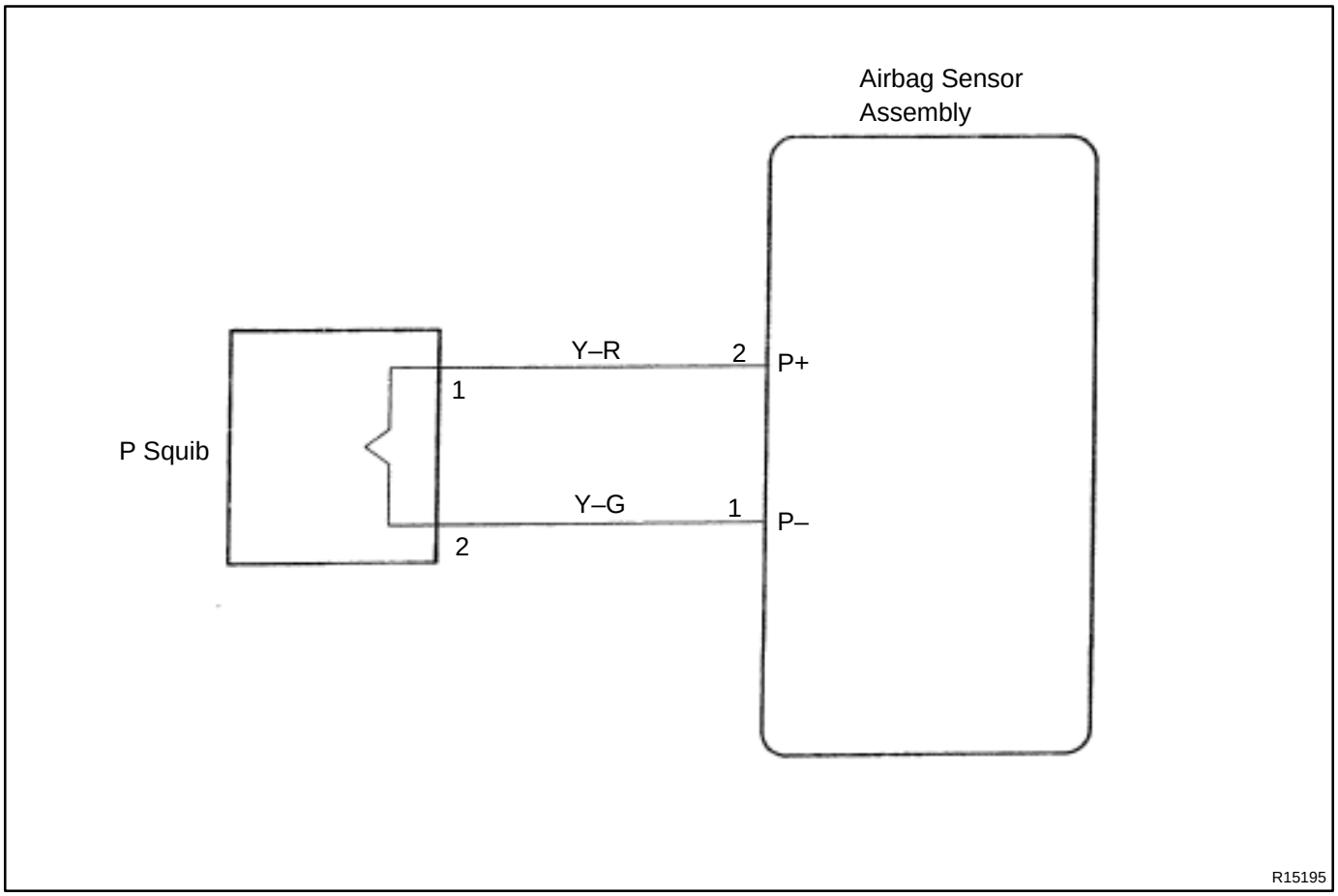

INSPECTION PROCEDURE

1	**Preparation. (See step 1 on page DI–252)**

2	Check P squib circuit.

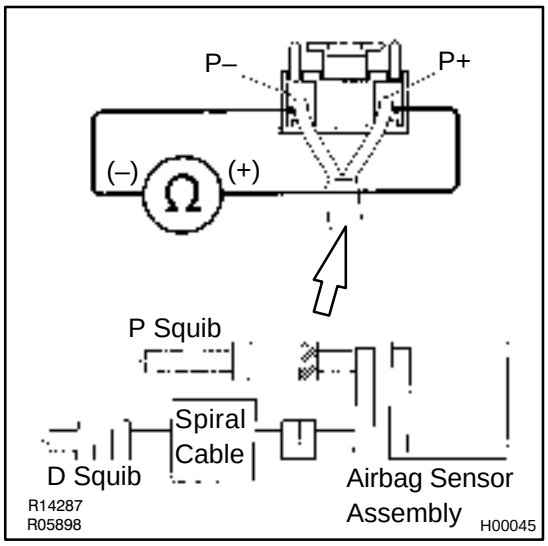

CHECK:

For the connector (on the airbag sensor assembly side) between the airbag sensor assembly and front passenger airbag assembly, measure the resistance between P^+ and P^-.

OK:

Resistance: 1 MΩ or Higher

NG → **Repair or replace harness or connector between airbag sensor assembly and front passenger airbag assembly.**

OK

3	Check airbag sensor assembly.

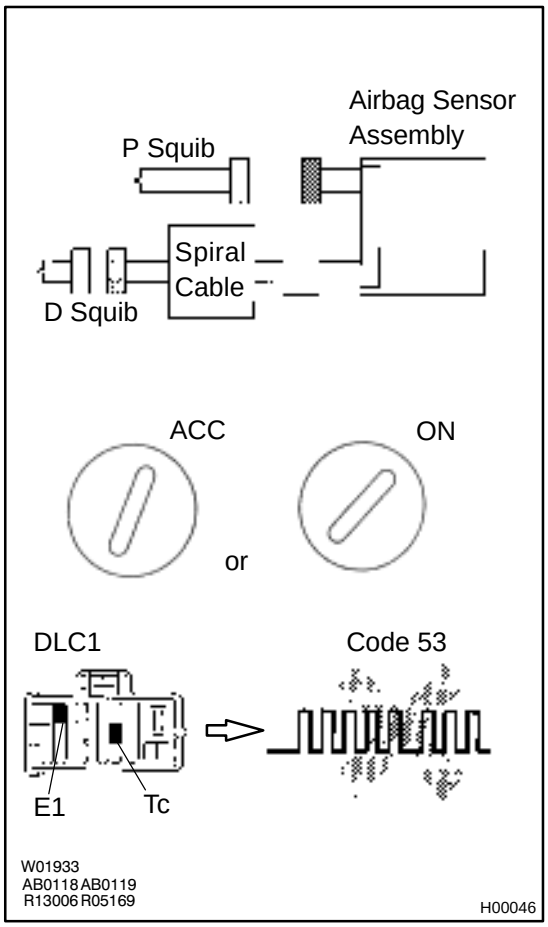

PREPARATION:

(a) Connect connector to airbag sensor assembly.
(b) Connect negative (–) terminal cable to battery, and wait at least 2 seconds.

CHECK:

(a) Turn ignition switch to ACC or ON and wait at least 20 seconds.
(b) Clear malfunction code stored in memory.
(See page DI–211)
(c) Turn ignition switch to LOCK, and wait at least 20 seconds.
(d) Turn ignition switch to ACC or ON, and wait at least 20 seconds.
(e) Using SST, connect terminals Tc and E1 of DLC1.
SST 09843–18020
(f) Check DTC.

OK:

DTC 53 is not output.

HINT:

Codes other than code 53 may be output at this time, but they are not relevant to this check.

NG → **Replace airbag sensor assembly.**

OK

4	**Check P squib.**

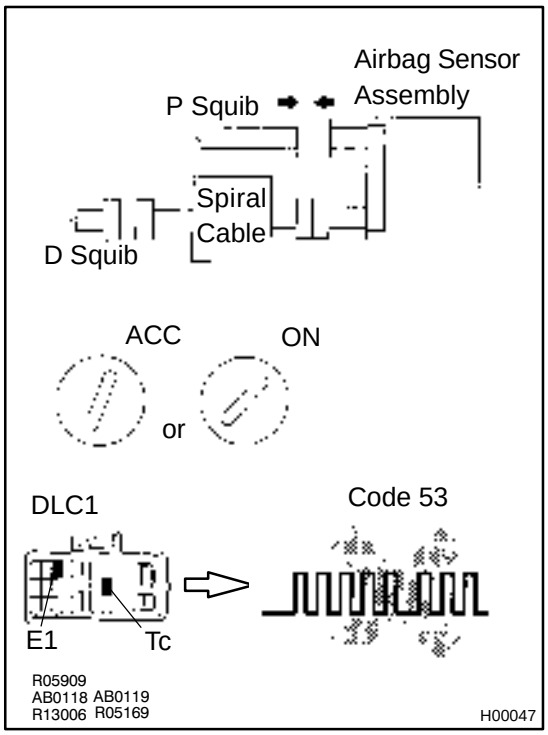

PREPARATION:

(a) Turn ignition switch to LOCK.
(b) Disconnect negative (–) terminal cable from the battery, and wait at least 90 seconds.
(c) Connect front passenger airbag assembly connector.
(d) Connect negative (–) terminal cable to battery, and wait at least 2 seconds.

CHECK:

(a) Turn ignition switch to LOCK, and wait at least 20 seconds.
(b) Turn ignition switch to ACC or ON, and wait at least 20 seconds.
(c) Clear malfunction code stored in memory.
(See page DI–211)
(d) Turn ignition switch to ACC or ON, and wait at least 20 seconds.
(e) Using SST, connect terminals Tc and E1 of DLC1.
SST 09843–18020
(f) Check DTC.

OK:

DTC 53 is not output.

HINT:
Codes other than code 53 may be output at this time, but they are not relevant to this check.

NG → **Replace front passenger airbag assembly.**

OK

From the results of the above inspection, the malfunctioning part can now be considered normal. To make sure of this, use the simulation method to check.

DI4PW–01

DTC	54	Open in P Squib Circuit

CIRCUIT DESCRIPTION

The P squib circuit consists of the airbag sensor assembly and front passenger airbag assembly. It causes the airbag to deploy when the airbag deployment conditions are satisfied.
For details of the function of each components, see FUNCTION OF COMPONENTS on page DI–211
DTC 54 is recorded when an open is detected in the P squib circuit.

DTC No.	DTC Detecting Condition	Trouble Area
54	• Open circuit in P^+ wire harness or P^- wire harness of squib • P squib malfunction • Airbag sensor assembly malfunction	• Front passenger airbag assembly (P squib) • Airbag sensor assembly • Wire harness

WIRING DIAGRAM

Refer to page DI–245 for the WIRING DIAGRAM.

INSPECTION PROCEDURE

1	**Preparation. (See step on page DI–252)**

2	**Check P squib circuit.**

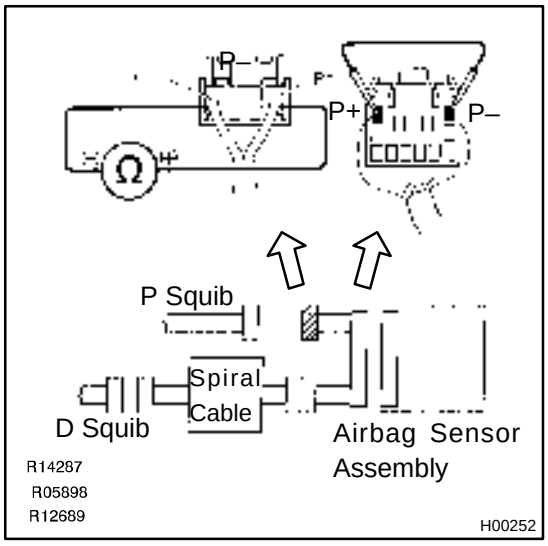

PREPARATION:
Using a service wire, connect P^+ and P^- on airbag sensor assembly connector.
CHECK:
For the connector (on the airbag sensor assembly side) between the airbag sensor assembly and front passenger airbag assembly measure the resistance between P^+ and P^-.
OK:
Resistance: Below 1 Ω

NG → **Repair or replace harness or connector between airbag sensor assembly and front passenger airbag assembly.**

OK

3	Check airbag sensor assembly.

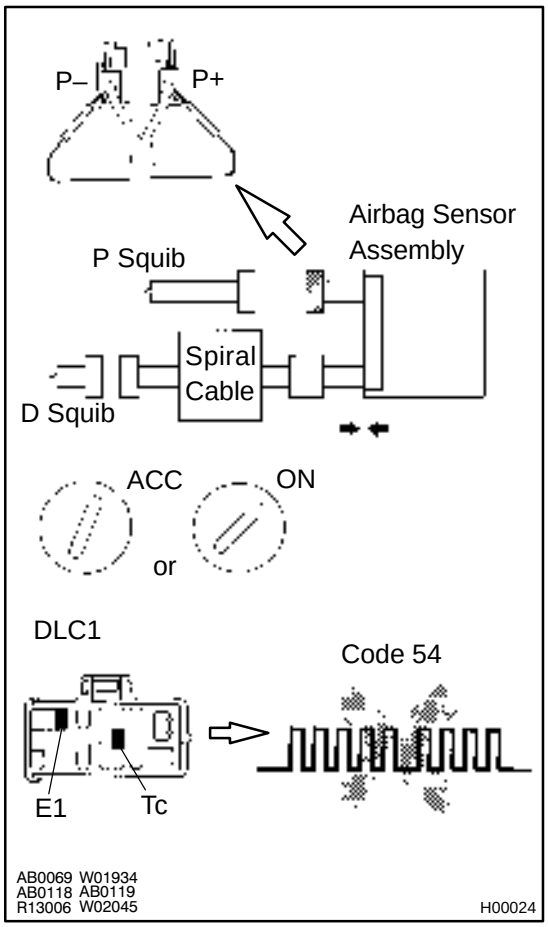

PREPARATION:

(a) Connect connector to airbag sensor assembly.

(b) Using a service wire, connect P^+ and P^- on airbag sensor assembly side of connector between airbag sensor assembly and front passenger airbag assembly.

(c) Connect negative (–) terminal cable to battery, and wait at least 2 seconds.

CHECK:

(a) Turn ignition switch to ACC or ON and wait at least 20 seconds.

(b) Clear malfunction code stored in memory.
(See page DI–252)

(c) Turn ignition switch to LOCK, and wait at least 20 seconds.

(d) Turn ignition switch to ACC or ON, and wait at least 20 seconds.

(e) Using SST, connect terminal Tc and E1 of DLC1.
SST 09843–18020

(f) Check DTC.

OK:

DTC 54 is not output.

HINT:

Codes other than code 54 may be output at this time, but they are not relevant to this check.

NG → **Replace airbag sensor assembly.**

OK

4	**Check P squib.**

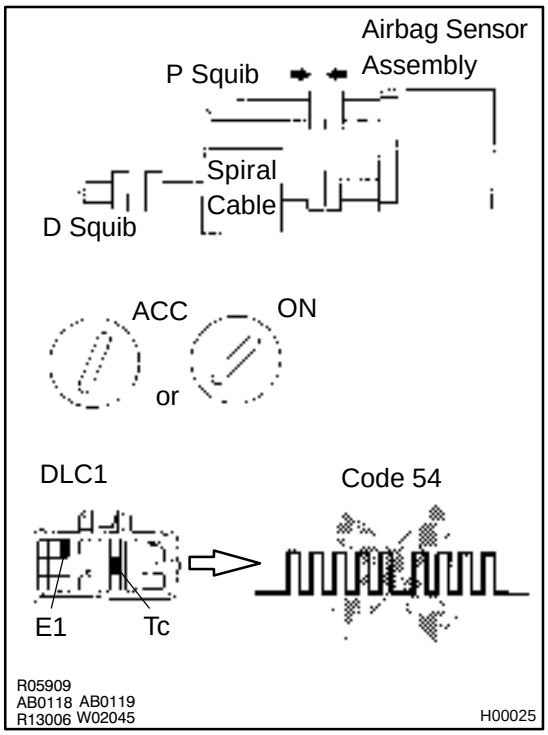

PREPARATION:

(a) Turn ignition switch to LOCK.
(b) Disconnect negative (–) terminal cable from the battery, and wait at least 90 seconds.
(c) Connect front passenger airbag assembly connector.
(d) Connect negative (–) terminal cable to battery, and wait at least 2 seconds.

CHECK:

(a) Turn ignition switch to ACC or ON and wait at least 20 seconds.
(b) Clear malfunction code stored in memory.
(See page DI–252)
(c) Turn ignition switch to LOCK, and wait at least 20 seconds.
(d) Turn ignition switch to ACC or ON, and wait at least 20 seconds.
(e) Using SST, connect terminals Tc and E1 of DLC1.
SST 09843–18020
(f) Check DTC.

OK:

DTC 54 is not output.

HINT:
Codes other than code 54 may be output at this time, but they are not relevant to this check.

NG → **Replace front passenger airbag assembly.**

OK

From the results of the above inspection, the malfunctioning part can now be considered normal. To make sure of this, use the simulation method to check.

DI4PX–01

DTC	Normal	Source Voltage Drop

CIRCUIT DESCRIPTION

The SRS is equipped with a voltage–increase circuit (DC–DC converter) in the airbag sensor assembly in case the source voltage drops.
When the battery voltage drops, the voltage–increase circuit (DC–DC converter) functions to increase the voltage of the SRS to normal voltage.
The diagnosis system malfunction display for this circuit is different to other circuits–when the SRS warning light remains lit up and the DTC is a normal code, source voltage drop is indicated.
Malfunction in this circuit is not recorded in the airbag sensor assembly and the source voltage returns to normal, the SRS warning light automatically goes off.

DTC No.	DTC Detecting Condition	Trouble Area
(Normal)	Source voltage drop.	• Battery • Airbag sensor assembly

WIRING DIAGRAM

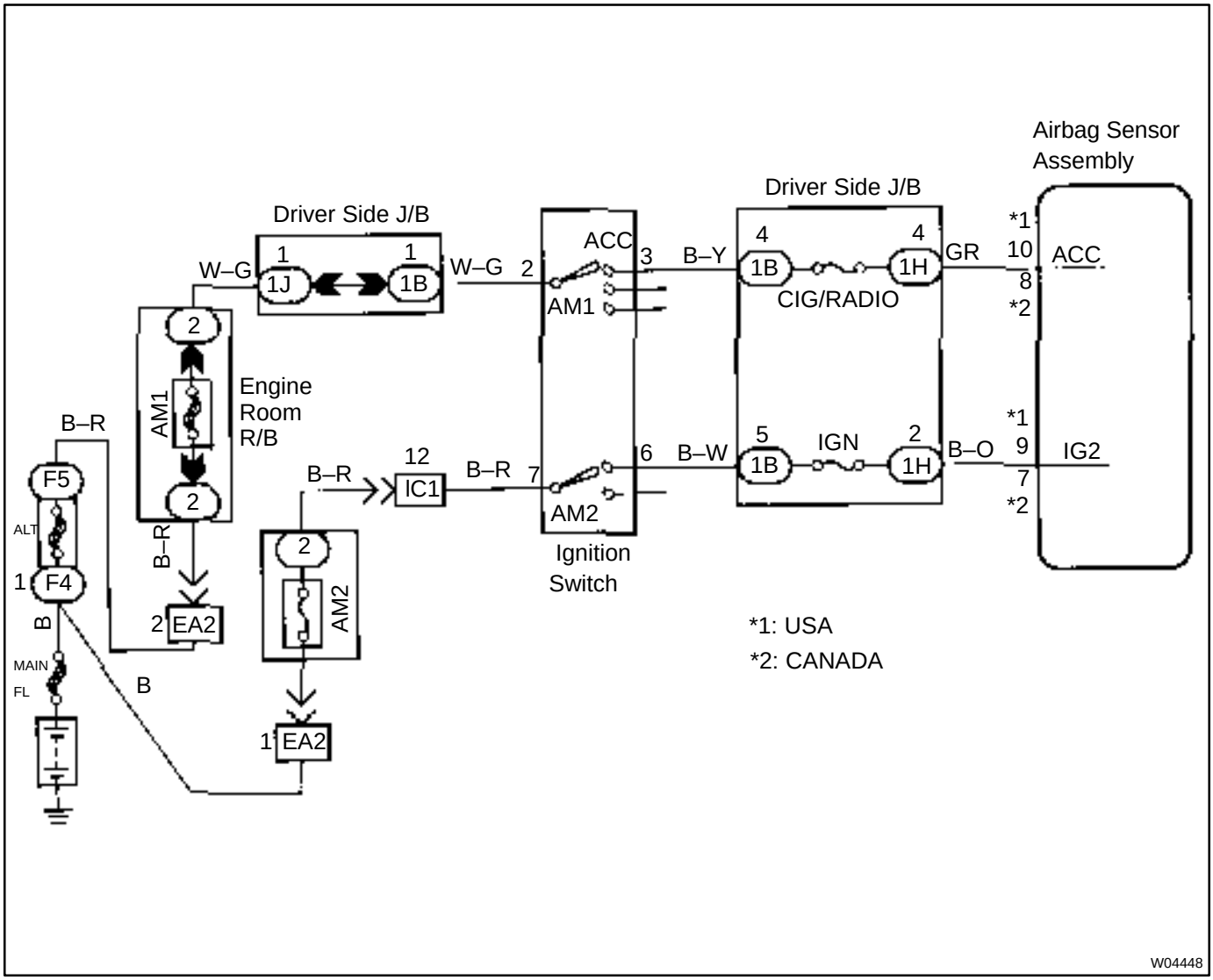

INSPECTION PROCEDURE

1	Preparation.

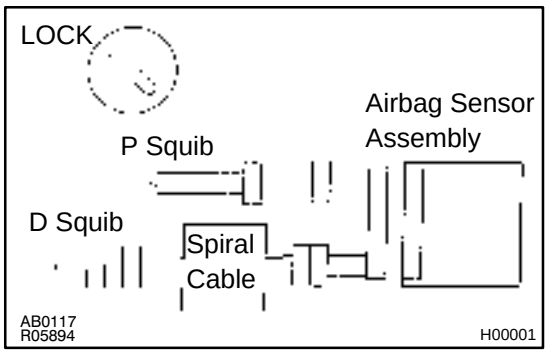

PREPARATION:

(a) Disconnect negative (–) terminal cable from the battery, and wait at least 90 seconds.
(b) Remove steering wheel pad. (See SR section)
(c) Disconnect connector of front passenger airbag assembly. (See page RS–22)
(d) Disconnect connector of airbag sensor assembly. (See page RS–34)

CAUTION:
Store the steering wheel pad with the front surface facing upward.

2	Check source voltage.

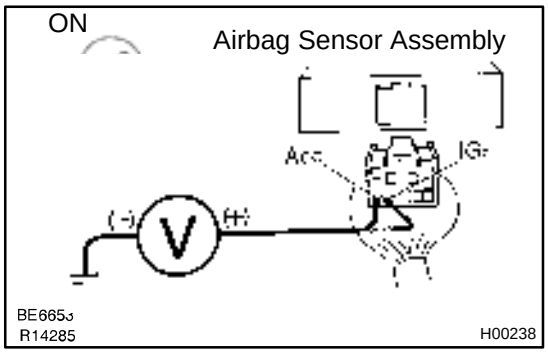

PREPARATION:

(a) Connect negative (–) terminal cable to battery.
(b) Turn ignition switch ON.

CHECK:

Measure voltage at IG2 or ACC on sensor and operate electric system. (defogger, wiper, headlight, heater blower, etc.)

OK:

Voltage: 10 – 14 V

NG → **Check the harness between battery and airbag sensor assembly, check the battery and charging system.**

OK

3	Does SRS warning light turn off?

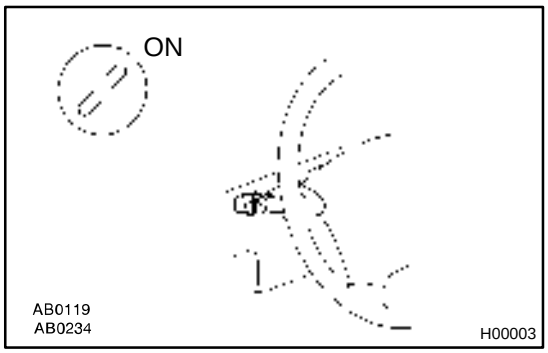

PREPARATION:

(a) Turn ignition switch to LOCK.
(b) Connect steering wheel pad connector.
(c) Connect front passenger airbag assembly connector.
(d) Connect airbag sensor assembly connector.
(e) Turn ignition switch ON.

CHECK:

Operate electric system checked in (defogger, wiper, headlight, heater blower, etc) and check that SRS warning light goes off.

NO → **Check DTCs. If a DTC is output, perform trouble-shooting according to DTC. If a normal code is output, replace airbag sensor assembly.**

YES

From the results of the above inspection, the malfunctioning part can now be considered normal. To make sure of this, use the simulation method to check.

DI4PY–01

SRS Warning Light System Malfunction (Always lit up when ignition switch is in LOCK position.)

CIRCUIT DESCRIPTION

The SRS warning light is located on the combination meter.
When the SRS is normal, the SRS warning light lights up for approx. 6 seconds after the ignition switch is turned from LOCK position to ACC or ON position, and then turns off automatically.
If there is a malfunction in the SRS, the SRS warning light lights up to inform the driver of the abnormality.
When terminals Tc and E1 of the DLC1 are connected, the DTC is displayed by the blinking of the SRS warning light.

WIRING DIAGRAM

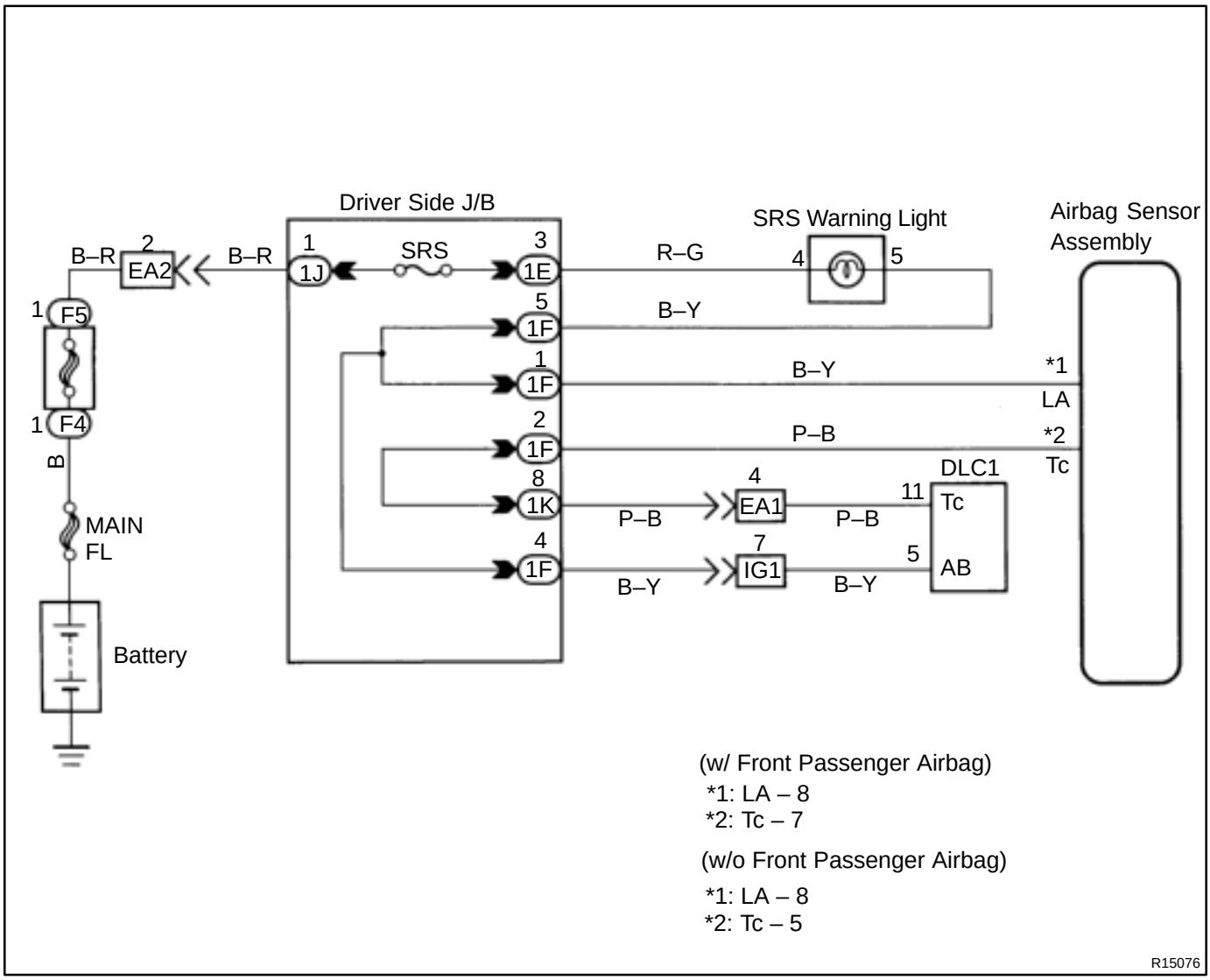

INSPECTION PROCEDURE

1	Preparation

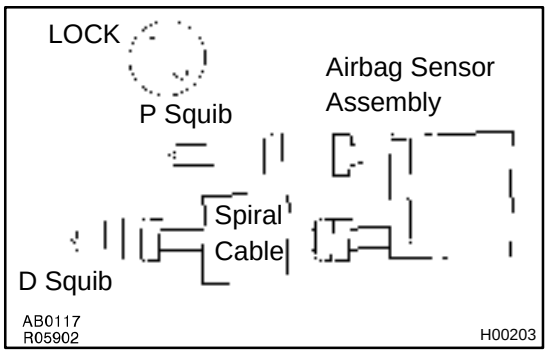

PREPARATION:

(a) Disconnect negative (–) terminal cable from the battery, and wait at least 90 seconds.
(b) Remove steering wheel pad (See SR section).
(c) Disconnect connector of front passenger airbag assembly (See page RS–22).

CAUTION:

Store the steering wheel pad with the front surface facing upward.

2	Does SRS warning light turn off?

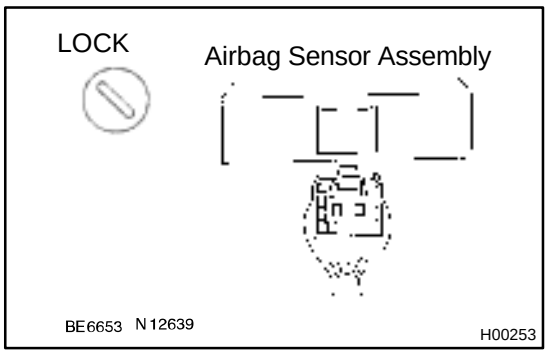

PREPARATION:

(a) Disconnect airbag sensor assembly connector.
(b) Connect negative (–) terminal cable to battery.

CHECK:

Check operation of SRS warning light.

NO → **Check SRS warning light circuit or terminal AB circuit of DLC1.**

YES

Replace airbag sensor assembly.

DI4PZ–01

SRS Warning Light System Malfunction (Does not light up when ignition switch is turned to ACC or ON).

CIRCUIT DESCRIPTION

The SRS warning light is located on the combination meter.
When the SRS is normal, the SRS warning light lights up for approx. 6 seconds after the ignition switch is turned from LOCK position to ACC or ON position, and then turns off automatically.
If there is a malfunction in the SRS, the SRS warning light lights up to inform the driver of the abnormality When terminals Tc and E1 of the DLC1 are connected, the DTC is displayed by the blinking of the SRS warning light.

WIRING DIAGRAM

Refer to page DI–255 for the WIRING DIAGRAM.

INSPECTION PROCEDURE

1	**Check SRS Fuse.**

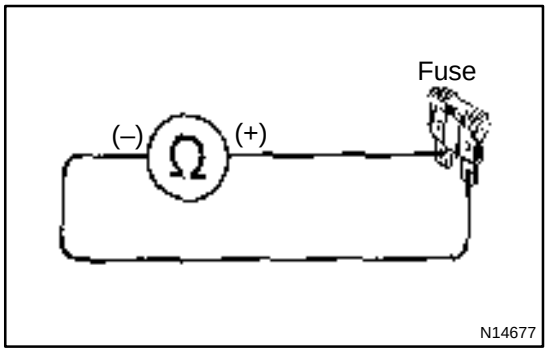

PREPARATION:
Remove SRS fuse.
CHECK:
Check continuity of SRS fuse.
OK:
Continuity
HINT:

- Fuse may be burnt out even if it appears to be OK during visual inspection.
- If fuse is OK, install it.

NG → **Go to step 5.**

OK

2	**Preparation. (See step on page DI–252)**

3	Check SRS warning light circuit.

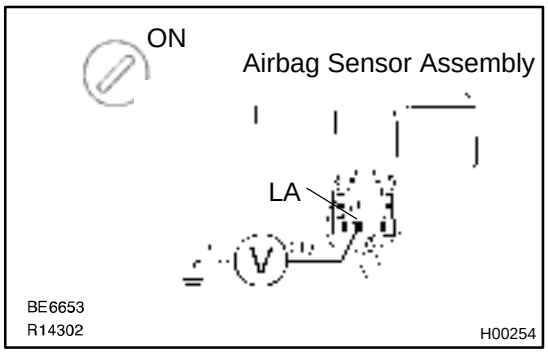

PREPARATION:

(a) Connect negative (–) terminal cable to battery.

(b) Turn ignition switch to ACC or ON.

CHECK:

Measure voltage LA terminal of harness side connector of airbag sensor assembly.

OK:

Voltage: 10 – 14 V

NG → **Check SRS warning light bulb / repair SRS warning light circuit.**

OK

4	Does SRS warning light come on?

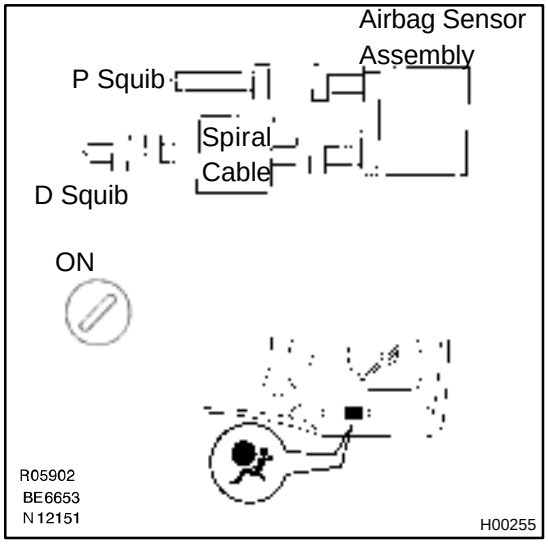

PREPARATION:

(a) Disconnect negative (–) terminal cable from the battery.

(b) Connect airbag sensor assembly connector.

(c) Connect negative (–) terminal cable to battery, are wait at least 2 seconds.

(d) Turn ignition switch to ACC or ON.

CHECK:

Check operation of SRS warning light.

NO → **Check terminal LA of airbag sensor assembly. If normal, replace airbag sensor assembly.**

YES

From the results of the above inspection, the malfunctioning part can now be considered normal. To make sure of this, use the simulation method to check.

5	**Is new SRS fuse burnt out again?**

NO → **Using simulation method, reproduce malfunction symptoms (See page IN–17).**

YES

Check harness between SRS fuse and SRS warning light.

Tc Terminal Circuit

CIRCUIT DESCRIPTION

By connecting terminals Tc and E1 of the DLC1 the airbag sensor assembly is set in the DTC output mode. The DTCs are displayed by the blinking of the SRS warning light.

WIRING DIAGRAM

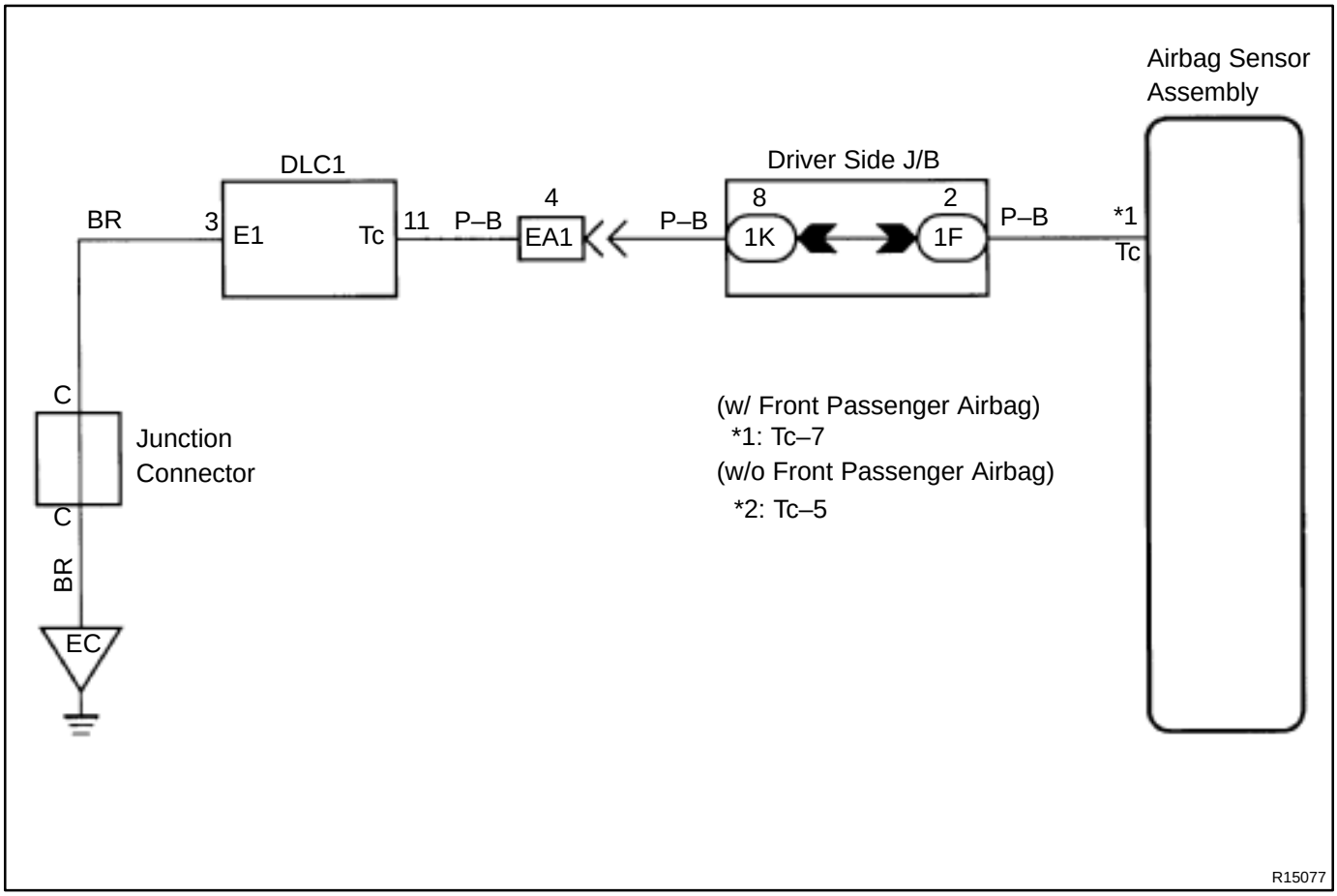

INSPECTION PROCEDURE

HINT:

If the DTC is not displayed, do the following troubleshooting.

1	**Does SRS warning light light up for approx. 6 seconds?**

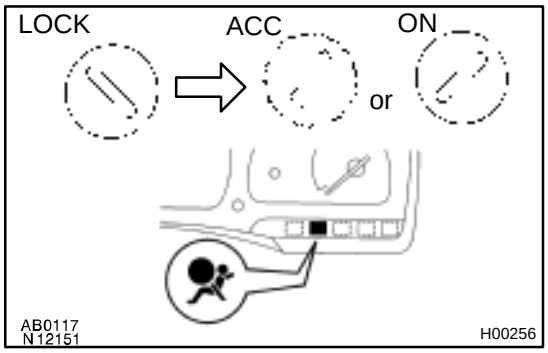

PREPARATION:

Check operation of SRS warning light after ignition switch is turned from LOCK position to ACC or ON position.

NO → **Check SRS warning light system. (See page DI–255, DI–257)**

YES

2	**Check voltage between terminals Tc and E1 of DLC1.**

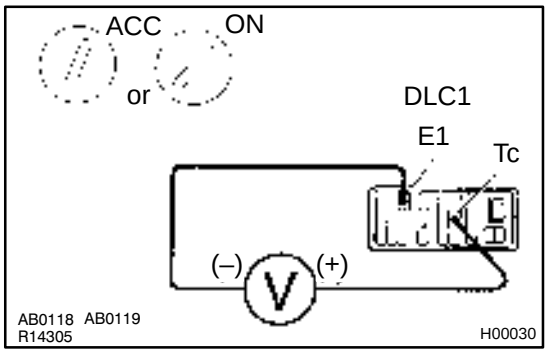

PREPARATION:

Turn ignition switch to ACC or ON.

CHECK:

Measure voltage between terminals Tc and E1 of DLC1.

OK:

Voltage: 10 – 14 V

OK → **Go to step 4.**

NG

3	Check voltage between terminal Tc of DLC1 and body ground

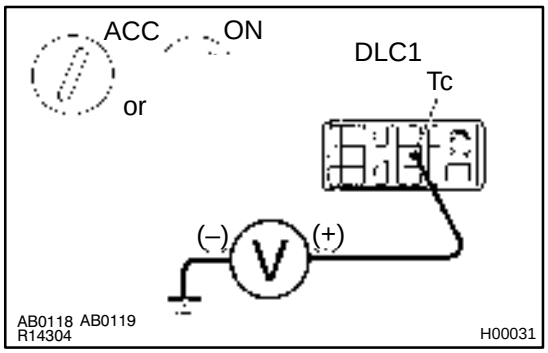

CHECK:

Measure voltage between terminal Tc of DLC1 and body ground.

OK:

Voltage: 10 – 14 V

OK → **Check harness between terminal E1 of DLC1 and body ground.**

NG

4	Check airbag sensor assembly.

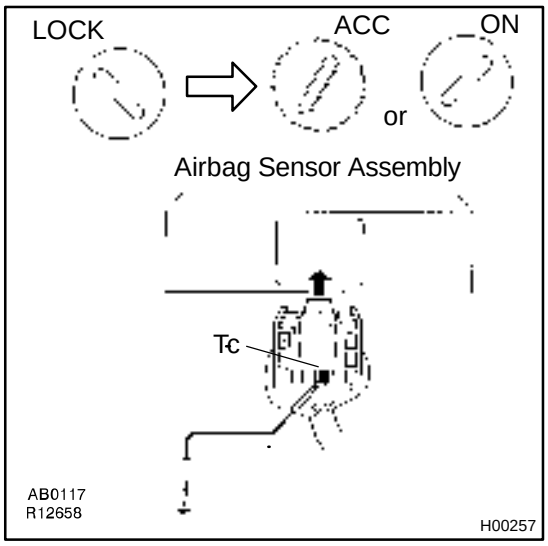

PREPARATION:

(a) Turn ignition switch to LOCK.
(b) Disconnect negative (–) terminal cable from the battery, and wait at least 90 seconds.
(c) Remove steering wheel pad (See SR section)
(d) Disconnect connector of front passenger airbag assembly. (See page RS–22).
(e) Disconnect connector of airbag sensor assembly. (See page RS–34).
(f) Insert service wire into terminal Tc from back side as shown.
(g) Connect airbag sensor assembly connector with service wire.
(h) Connect negative (–) terminal cable to battery.
(i) Turn ignition switch to ACC or ON and wait at least 20 seconds.
(j) Connect service wire of terminal Tc to body ground.

CHECK:

Check operation of SRS warning light.

OK:

SRS waning light comes on.

NOTICE:

Never make a mistake with the terminal connection position as this will cause a malfunction.

OK → **Check harness between airbag sensor assembly and DLC1.**

NG → **Replace airbag sensor assembly.**

If the DTC is displayed without a DTC check procedure, do the following troubleshooting.

1	**Check resistance between terminal Tc of airbag sensor assembly and body ground.**

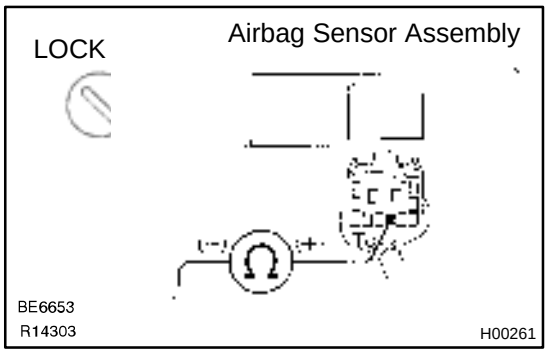

PREPARATION:

(a) Turn ignition switch to LOCK.
(b) Disconnect negative (–) terminal cable from the battery, and wait at least 90 seconds.
(c) Disconnect airbag sensor assembly connector.

CHECK:

Check resistance between terminal Tc of airbag sensor assembly connector and body ground.

OK:

Resistance: 1MΩ or higher

NG → **Repair or replace harness or connector.**

OK

Replace airbag sensor assembly.

DI4PK–01

CUSTOMER PROBLEM ANALYSIS CHECK

Supplemental Restraint System Check Sheet

Inspector's Name _____

Customer's Name		**Registration No.**	
		Registration Year	/ /
		Frame No.	
Date Vehicle Brought In	/ /	**Odometer Reading**	**km Miles**

Date Problem Dist Occurred	/ /
Weather	☐ Fine ☐ Cloudy ☐ Rainy ☐ Snowy ☐ Other
Temperature	**Approx.**

Vehicle Operation	☐ Starting ☐ Idling ☐ Driving [☐ Constant speed ☐ Acceleration ☐ Deceleration ☐ Other]
Road Conditions	
Details Of Problem	

Vehicle Inspection, Repair History¿Prior to Occurrence of Malfunction(Including Supplemental Restraint System)	

Diagnosis System Inspection

SRS Warning Light Inspection	**1st Time**	☐ Remains ON ☐ Sometimes Light Up ☐ Does Not Light Up
	2nd Time	☐ Remains ON ☐ Sometimes Light Up ☐ Does Not Light Up
DTC Inspection	**1st Time**	☐ Normal Code ☐ Malfunction Code [Code.]
	2nd Time	☐ Normal Code ☐ Malfunction Code [Code.]

DI4PM–01

DIAGNOSTIC TROUBLE CODE CHART

If a malfunction code is displayed during the DTC check, check the circuit listed for that code in the table below (Proceed to the page given for that circuit.).

DTC No. (See Page)	Detection Item	Trouble Area	SRS Warning Light
Normal (DI–252)	• System normal	–	OFF
	• Source voltage drop	• Battery • Airbag sensor assembly	ON
11 (DI–220)	• Short in squib circuit (to ground)	• Steering wheel pad (D squib) • Front passenger airbag assembly (P squib) • Spiral cable • Airbag sensor assembly • Wire harness	ON
12 (DI–227)	• Short in squib circuit (to B+)	• Steering wheel pad (D squib) • Front passenger airbag assembly (P squib) • Spiral cable • Airbag sensor assembly • Wire harness	ON
13 (DI–234)	• Short in D squib circuit	• Steering wheel pad (D squib) • Spiral cable • Airbag sensor assembly • Wire harness	ON
14 (DI–239)	• Open in D squib circuit	• Steering wheel pad (D squib) • Spiral cable • Airbag sensor assembly • Wire harness	ON
31 (DI–243)	• Airbag sensor assembly malfunction	• Airbag sensor assembly	ON
53 (DI–245)	• Short in P squib circuit	• Front passenger airbag assembly (P squib) • Airbag sensor assembly • Wire harness	ON
54 (DI–249)	• Open in P squib circuit	• Front passenger airbag assembly (P squib) • Airbag sensor assembly • Wire harness	ON

HINT:

- When the SRS warning light remains lit up and the DTC is the normal code, this means a source voltage drops.
  This malfunction is not stored in memory by the airbag sensor assembly and if the power source voltage returns to normal, the SRS warning light will automatically go out.
- When 2 or more codes are indicated, the codes will be displayed in numeral order starting from the lowest numbered code.
- If a code not listed on the chart is displayed, the airbag sensor assembly is faulty.

SUPPLEMENTAL RESTRAINT SYSTEM

DI4PJ–01

HOW TO PROCEED WITH TROUBLESHOOTING

Perform troubleshooting in accordance with the procedure on the following pages.

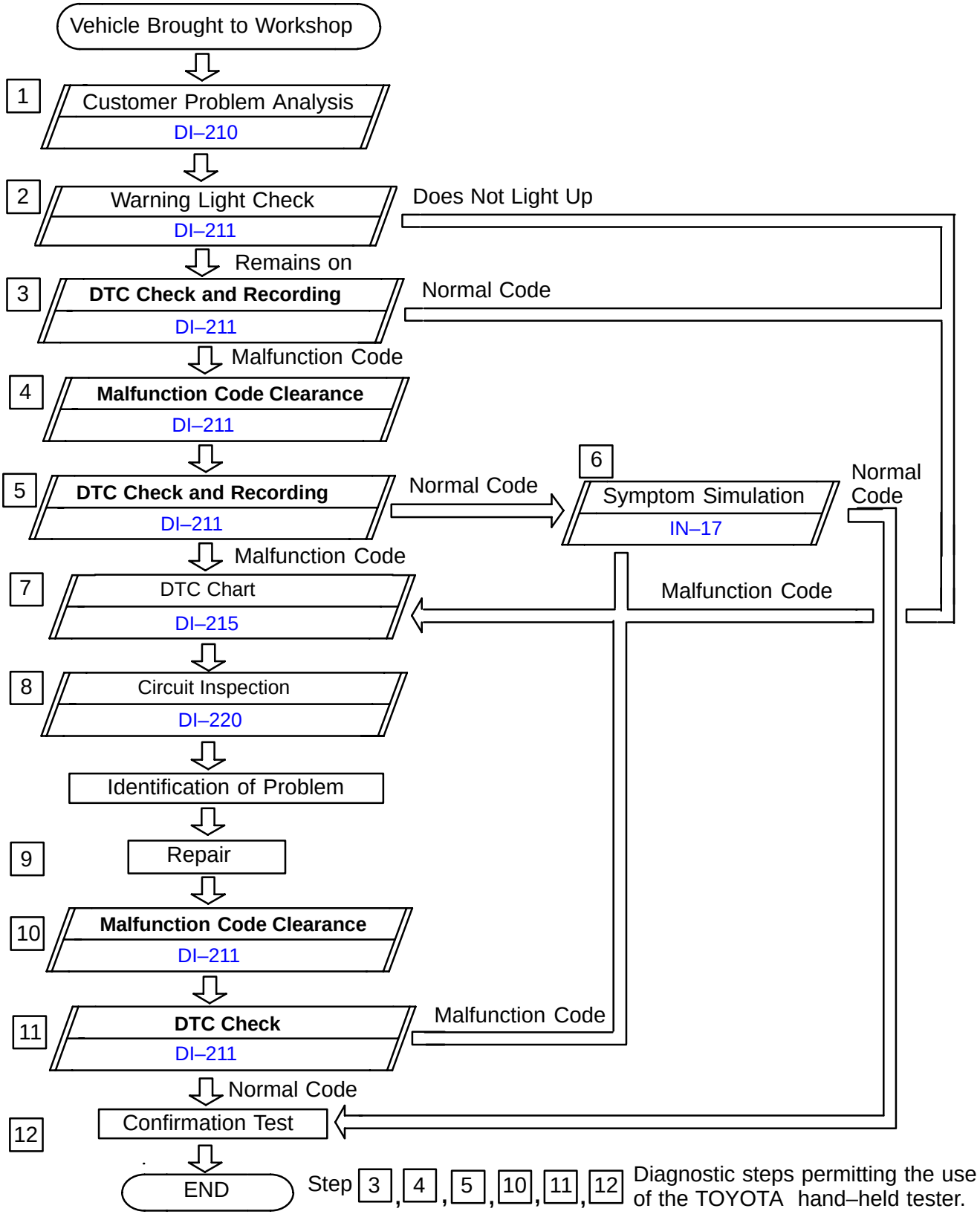

DI4PN–01

PARTS LOCATION

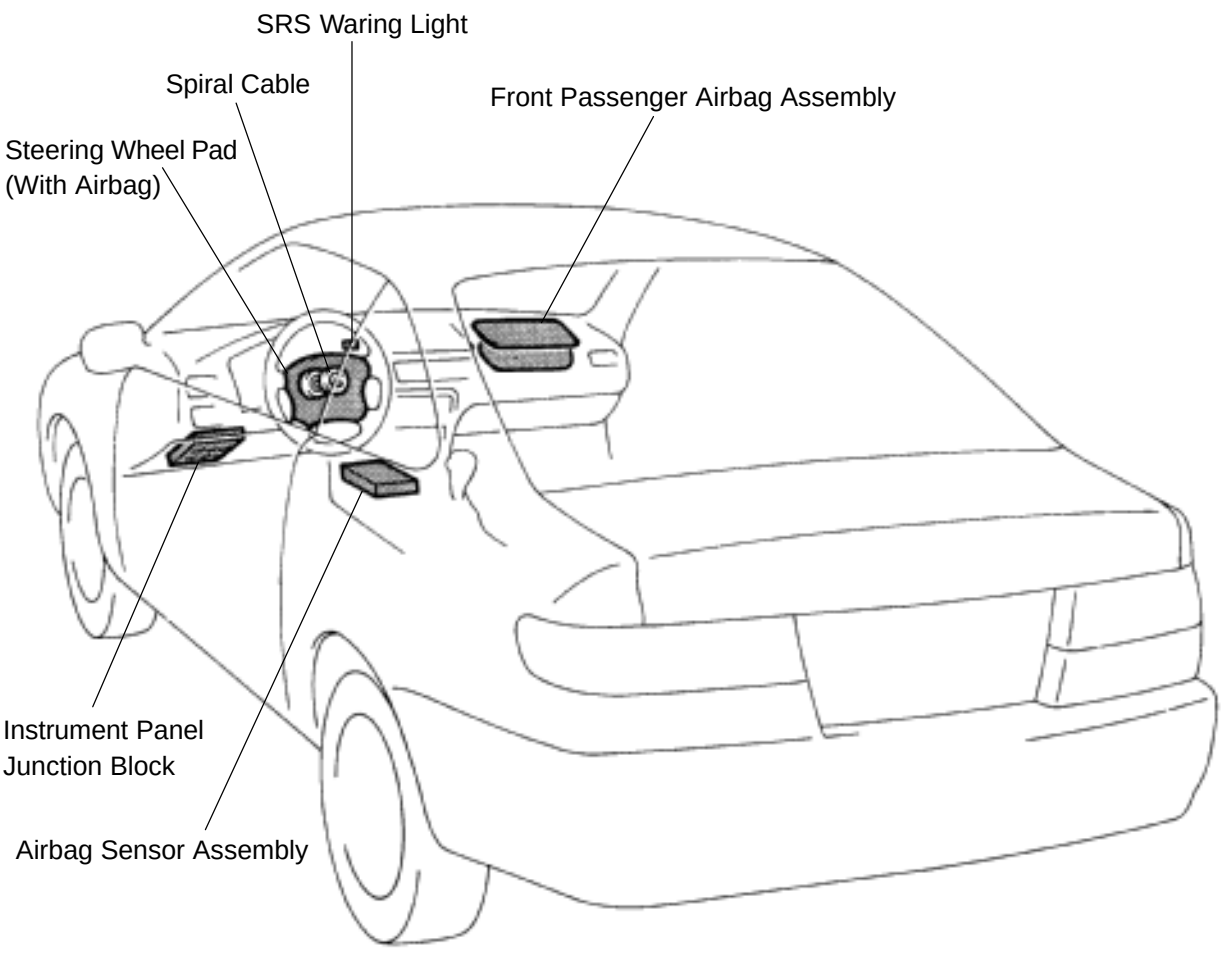

W00382

DI4PL–01

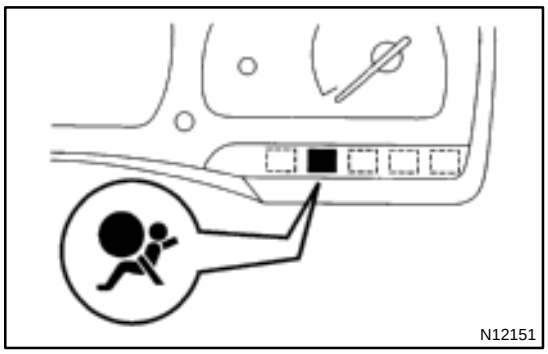

PRE–CHECK

1. SRS WARNING LIGHT CHECK

(a) Turn the ignition switch to ACC or ON and check that the SRS warning light lights up.

(b) Check that the SRS warning light goes out after approx. 6 seconds.

HINT:

- When the ignition switch is at ACC or ON and the SRS warning light remains on or flashes, the airbag sensor assembly has detected a malfunction code.
- If, after approx. 6 seconds have elapsed, the SRS warning light sometimes lights up or the SRS warning light lights up even when the ignition switch is OFF, a short in the SRS warning light circuit can be considered likely. Proceed to "SRS warning light system malfunction" on page DI–255, DI–257.

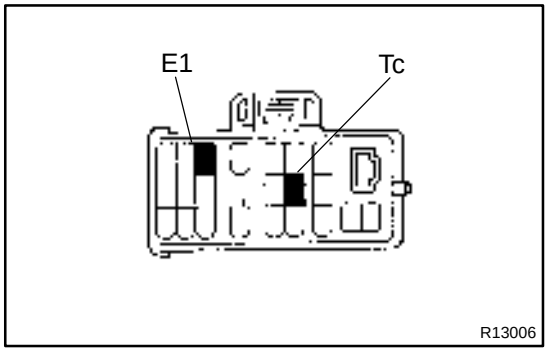

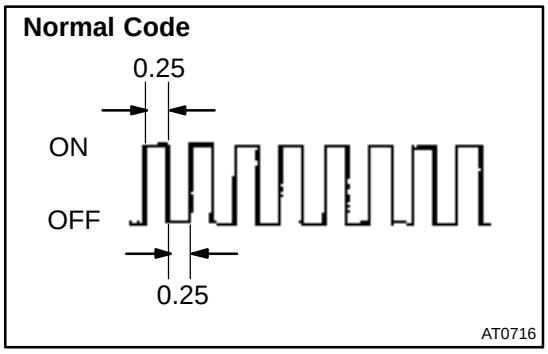

2. DTC CHECK (Using diagnosis check wire)

(a) Output the DTC

(1) Turn the ignition switch to the ACC or ON position and wait approx. 20 seconds.

(2) Using SST, connect terminals Tc and E1 of the DLC1.

SST 09843–18020

NOTICE:

Never make a mistake with the terminal connection position as this will cause a malfunction.

(b) Read the DTC

Read the 2–digit DTC as indicated by the number of times the SRS warning light blinks. As an example, the blinking patterns, normal, 11 and 31 are as shown on the illustration.

- Normal code indication.
  The light will blink 2 times per second.
- Malfunction code indication.
  The first blinking output indicates the first digit of a 2–digit DTC. After a 1.5 second pause, the second blinking output will indicate the second digit.

Code 11 and 31

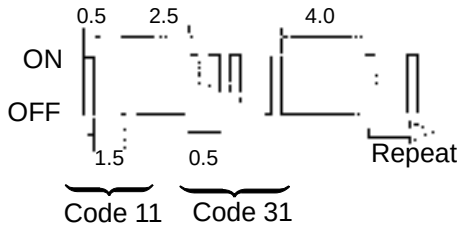

AB0056

If there are 2 or more codes, there will be a 2.5 second pause between each code. After all the codes have been output, there will be a 4.0 second pause and they will all be repeated.

HINT:

- In the event of a number of trouble codes, indication will start from the smallest numbered code.
- If it does not output a DTC or outputs a DTC without terminal connection, proceed to the Tc terminal circuit inspection on page DI–260.

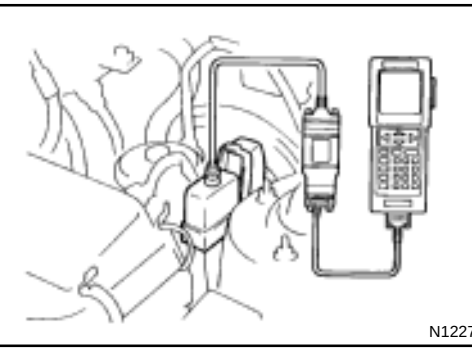

N12278

3. DTC CHECK (Using TOYOTA hand–held tester)

(a) Hook up the TOYOTA hand–held tester to the DLC1.

(b) Read the DTCs by following the prompts on the tester screen.

HINT:

Please refer to the TOYOTA hand–held tester operator's manual, for further details.

4. DTC CLEARANCE (Using diagnosis check wire)

(a) Connect the 2 service wires to terminals Tc and AB of DLC1.

(b) Turn the ignition switch to ACC or ON and wait approx. 6 seconds.

(c) Starting with the Tc terminal, apply body ground alternately to terminal Tc and terminal AB twice each in cycles of 1.0 seconds. Confirm that body ground is absolute. Finally, keep applying body ground to terminal Tc.

HINT:

When alternately grounding terminals Tc and AB, release ground from one terminal and immediately apply it to the other terminal within an interval of 0.2 second. If DTCs do not clear, repeat the above procedure until the codes are cleared.

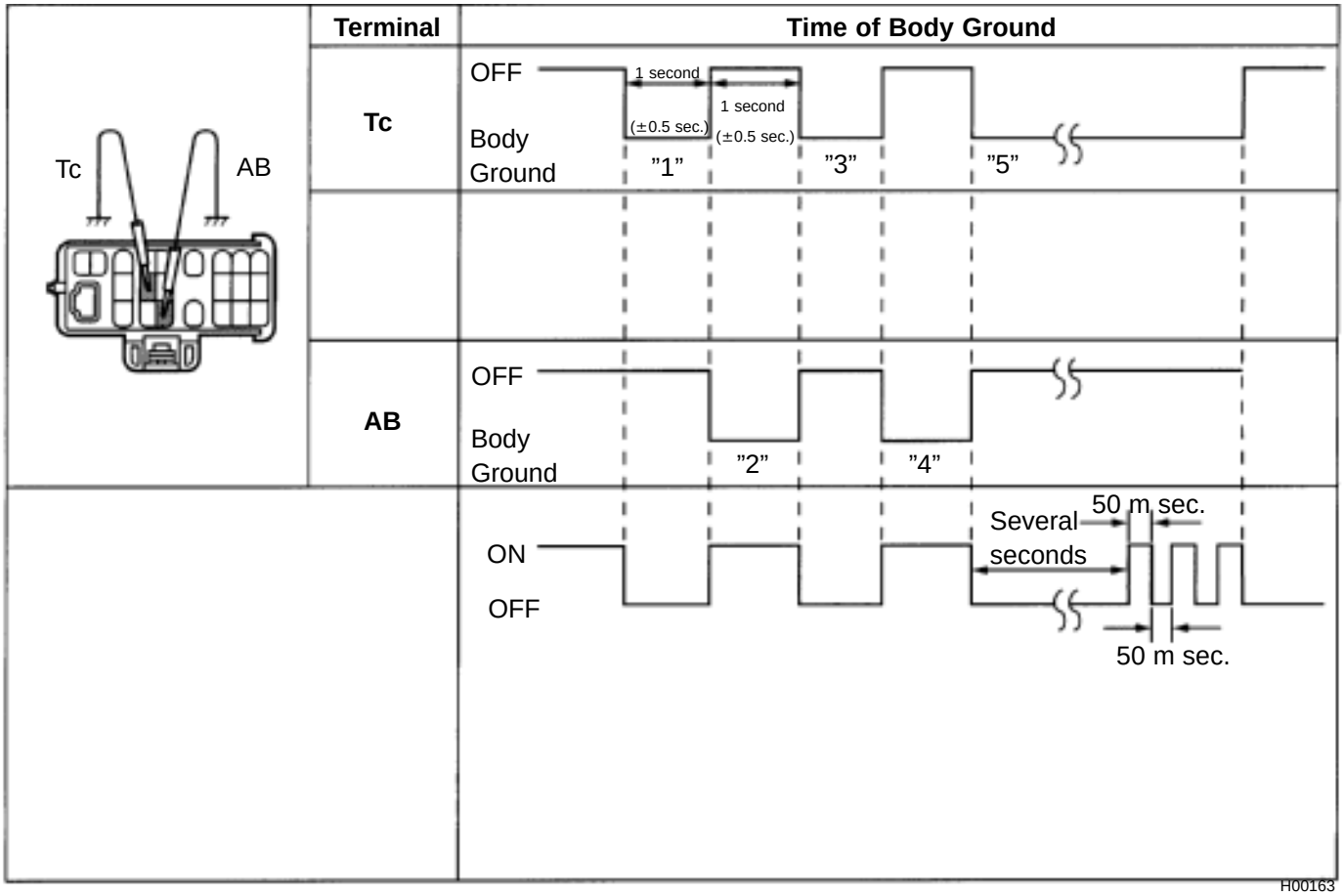

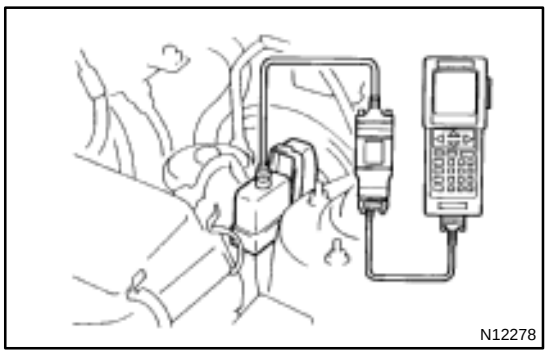

(d) Several seconds after doing the clearing procedure, the SRS waring light will blink in a 50 m sec. cycle to indicate the codes have been cleared.

5. DTC CHECK (Using TOYOTA hand–held tester)

(a) Hook up the TOYOTA hand–held tester to the DLC1.

(b) Clear the DTC by following the prompts on the tester screen.

HINT:

Please refer to the TOYOTA hand–held tester operator's manual for further details.

6. RELEASE METHOD OF AIRBAG ACTIVATION PREVENTION MECHANISM

An airbag activation prevention mechanism is built into the connector for the squib circuit of the SRS.

When release of the airbag activation prevention mechanism is directed in the troubleshooting procedure, as shown in the illustration of the connectors ”1” and ”3” below, insert paper which is the same thickness as the male terminal, between the terminal and short spring.

CAUTION:

- **NEVER RELEASE the airbag activation prevention mechanism on the steering wheel pad connector.**

NOTICE:

- **Do not release the airbag activation prevention mechanism unless specifically directed by the troubleshooting procedure.**
- **If the paper inserted is too thick the terminal and short spring may be damaged, so always use paper the same thickness as the male terminal.**

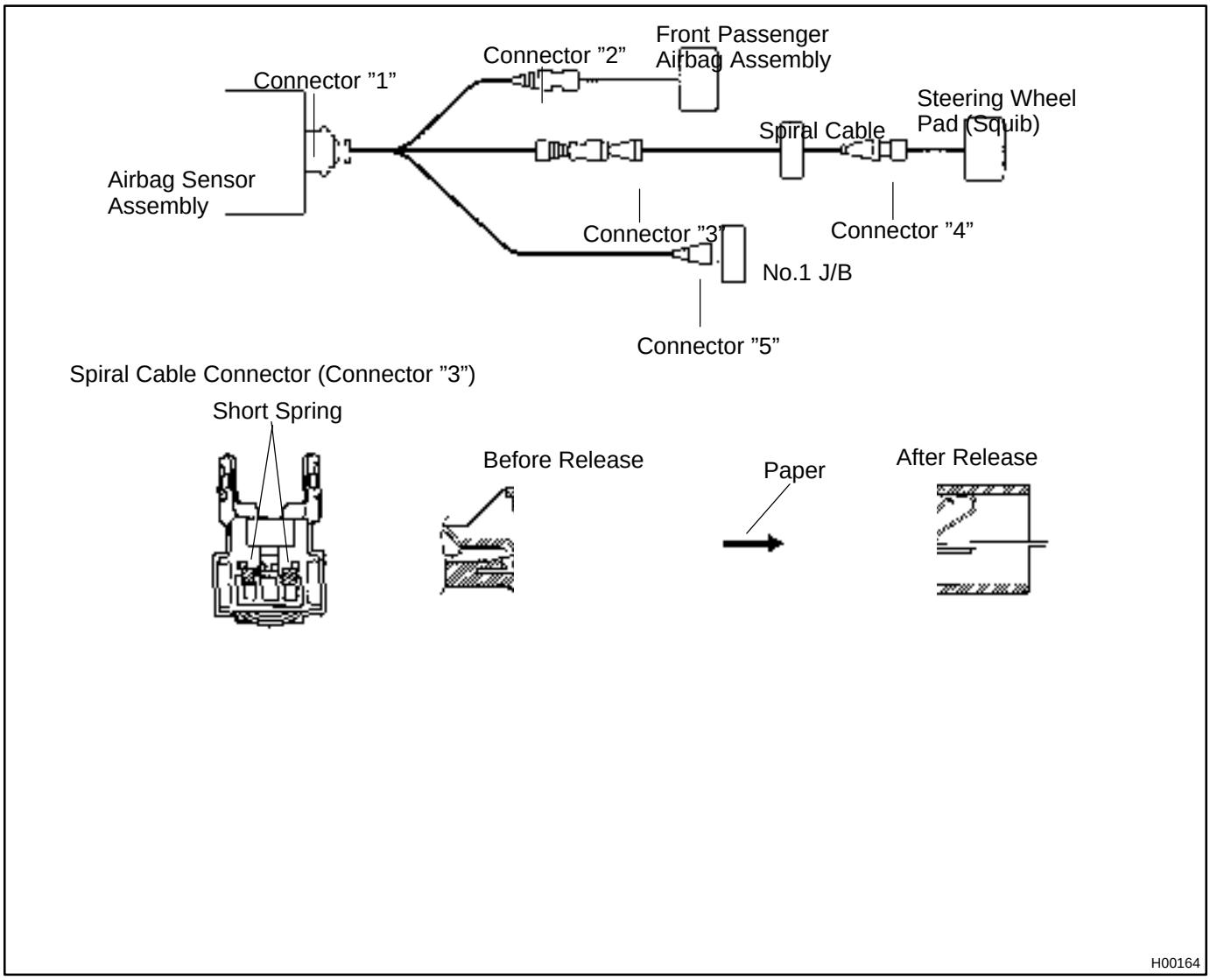

DI4PP–01

PROBLEM SYMPTOMS TABLE

Proceed with troubleshooting of each circuit in the table below.

Symptom	Suspect Area	See page
• With the ignition switch at ACC or ON, the SRS warning light sometimes lights up after approx. 6 seconds have elapsed. • SRS warning light is always lit up even when ignition switch is in the LOCK position.	• SRS warning light system malfunction (Always lit up when ignition switch is in LOCK position.)	DI–255
• With the ignition switch at ACC or ON, the SRS warning light does not light up.	• SRS warning light system malfunction (Does not light up, when ignition switch is turned to ACC or ON.)	DI–257
• DTC not displayed. • SRS warning light is always lit up a DTC check procedure. • DTC displayed without Tc and E1 terminal connection.	• Tc terminal circuit	DI–260

DI4PO–01

TERMINALS OF ECM

1. w/o Front Passenger Airbag Assembly

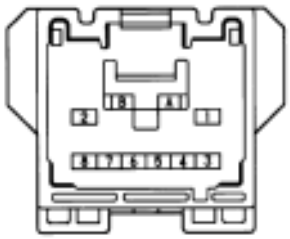

W05581

No.	Symbol	Terminal Name
A	–	Electrical Connection Check Mechanism
B	–	Electrical Connection Check Mechanism
1	P^-	D squib ⊖
2	P^+	D squib ⊕
3	E_1	Ground
4	E_2	Ground
5	Tc	Diagnosis
6	LA	SRS Warning Light
7	IG_2	Power Source (IGN Fuse)
8	ACC	Power Source (CIG Fuse)

2. w/ Front Passenger Airbag Assembly

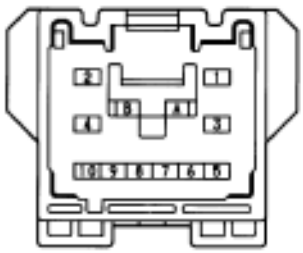

W05580

No.	Symbol	Terminal Name
A	–	Electrical Connection Check Mechanism
B	–	Electrical Connection Check Mechanism
1	P^-	Squib ⊖ (Passenger)
2	P^+	Squib ⊕ (Passenger)
3	D^-	Squib ⊖ (Driver)
4	D^+	Squib ⊕ (Driver)
5	E_1	Ground
6	E_2	Ground
7	Tc	Diagnosis
8	LA	SRS Warning Light
9	IG_2	Power Source (IGN Fuse)
10	ACC	Power Source (CIG Fuse)

DI4QG–01

Door Courtesy Switch Circuit

CIRCUIT DESCRIPTION

The door courtesy switch goes on when the door is opened and goes off when the door is closed.

WIRING DIAGRAM

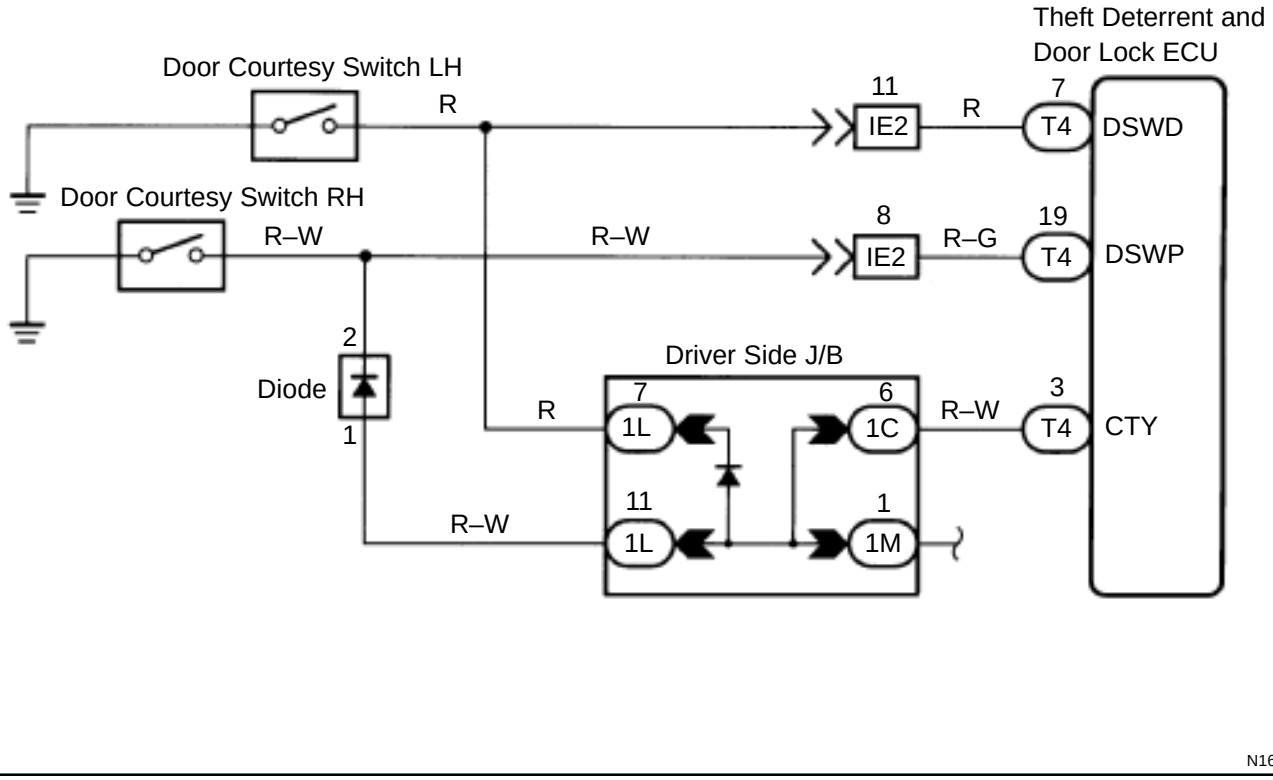

N16787

INSPECTION PROCEDURE

1	**Check operation of open door warning light.**

CHECK:

Check that open door warning light comes on when each door is opened, and goes off when all doors are closed.

NG → **Check and repair open door warning light circuit.**

OK

2	**Check for open in harness and connector between theft deterrent ECU and door courtesy switch (See page IN–27).**

OK → **Check and replace theft deterrent ECU. *1**

NG

Repair or replace harness or connector.

*1: When there is a malfunction that the theft deterrent system cannot be set, proceed to the next numbered circuit inspection shown on matrix chart (See page DI–273).

DI4QH–01

Door Unlock Detection Switch Circuit

CIRCUIT DESCRIPTION

The door unlock detection switch is built in the door lock motor assembly. This switch is on when the door lock knob is in the unlock position and off when the lock knob is in the lock position. The ECU detects the front door lock knob conditions in this circuit. It is used as one of the operating conditions for the key confinement prevention function.

WIRING DIAGRAM

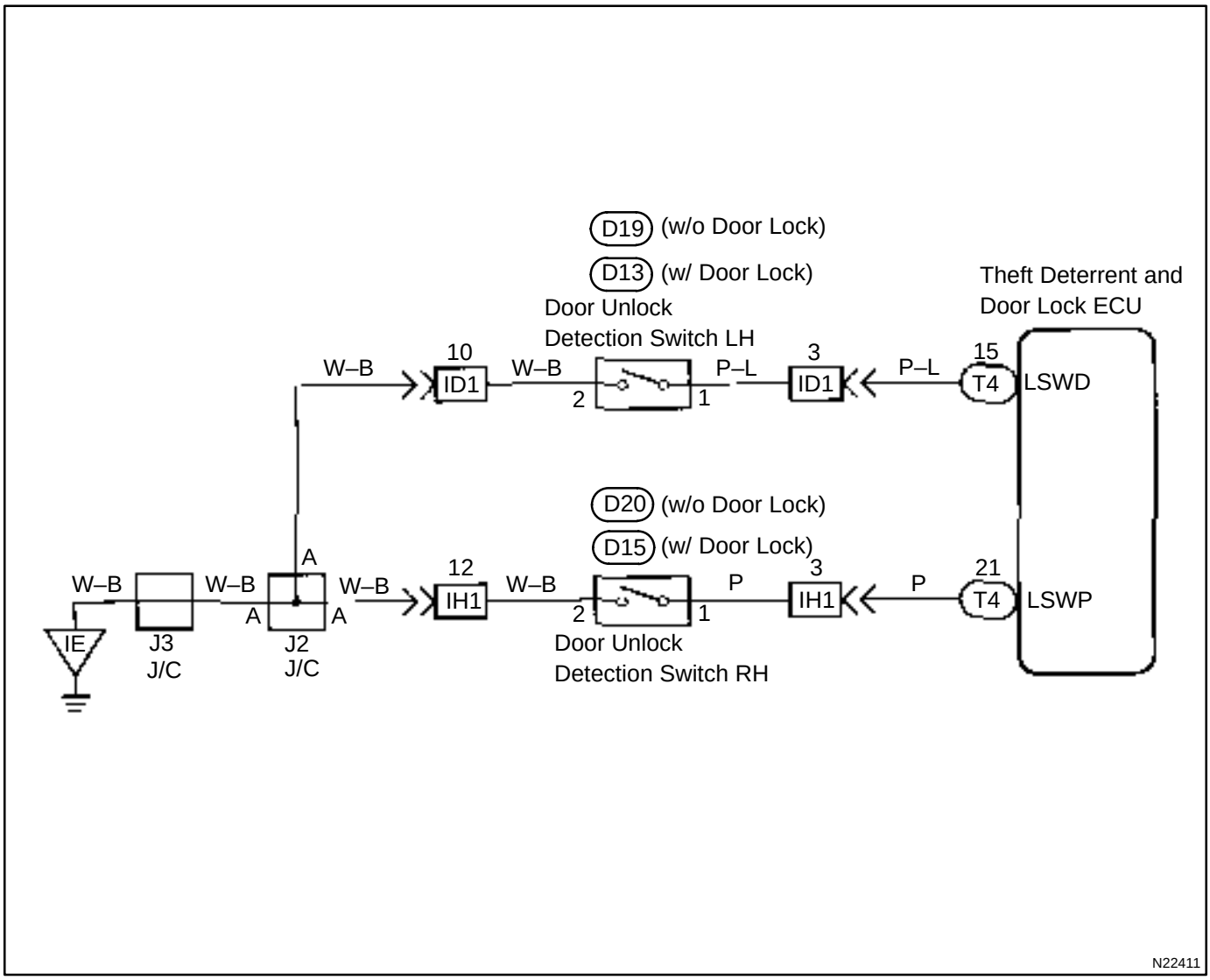

INSPECTION PROCEDURE

1	**Check Door Unlock Detection Switch.**

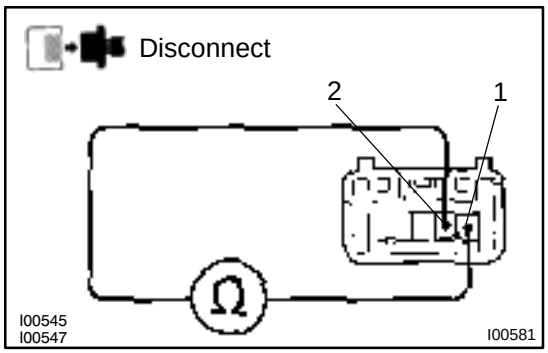

PREPARATION:

(a) Remove the door trim and service hole cover.

(b) Disconnect door unlock detection switch connector.

CHECK:

Check continuity between terminals 1 and 2 of door unlock detection switch connector, when the door lock knob is operated to the lock side and unlock side.

OK:

Switch Condition	Tester connection	Specified condition
Door unlock	1 – 2	Continuity
Door lock	–	No continuity

NG → **Replace door unlock detection switch.**

OK ↓

2	**Check harness and connectors between door lock control ECU and door unlock detection switch, door unlock detection switch and body ground (See page IN–27).**

NG → **Repair or replace harness or connector.**

OK ↓

Proceed to next circuit inspection shown on matrix chart (See page DI–273)

DI4QI–01

Engine Hood Courtesy Switch Circuit

CIRCUIT DESCRIPTION

The engine hood courtesy switch is built into the engine hood lock assembly and goes on when the engine hood is opened and goes off when the engine hood is closed.

WIRING DIAGRAM

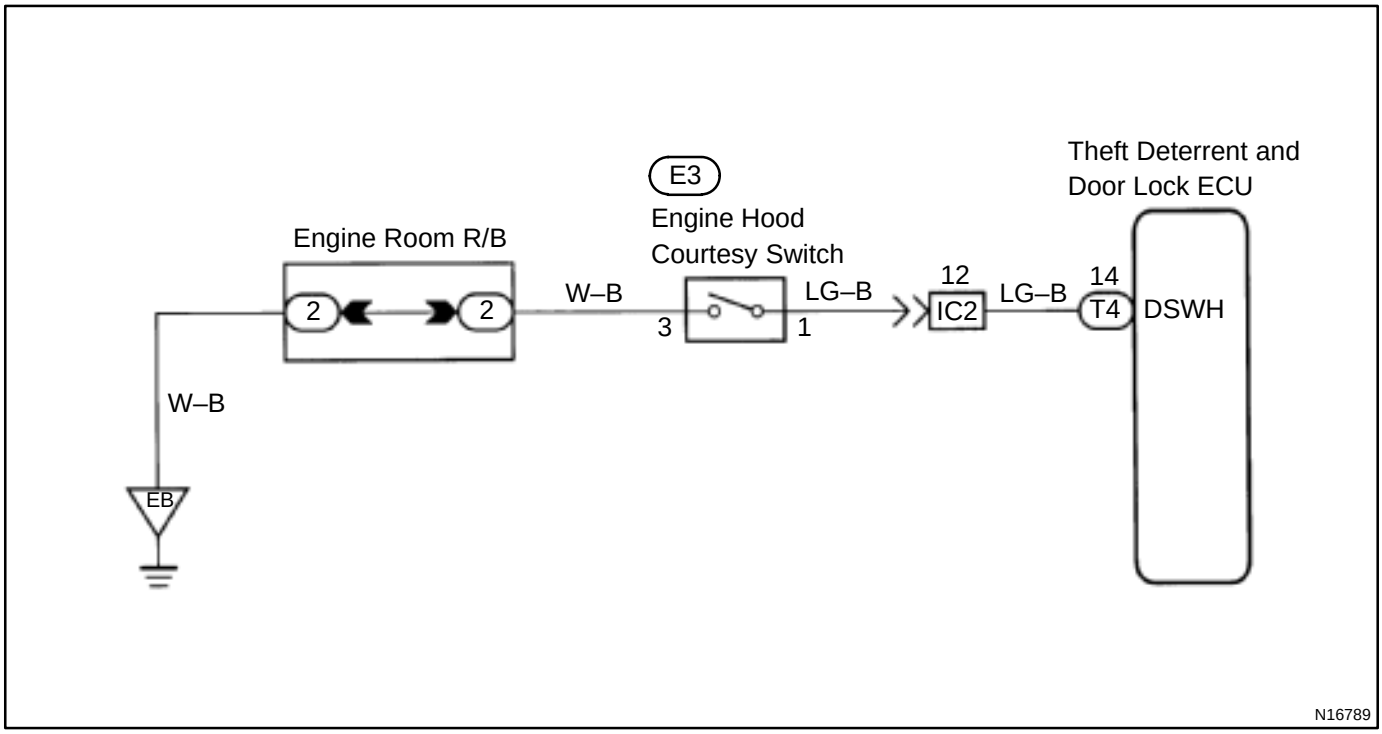

INSPECTION PROCEDURE

1	**Check engine hood courtesy switch.**

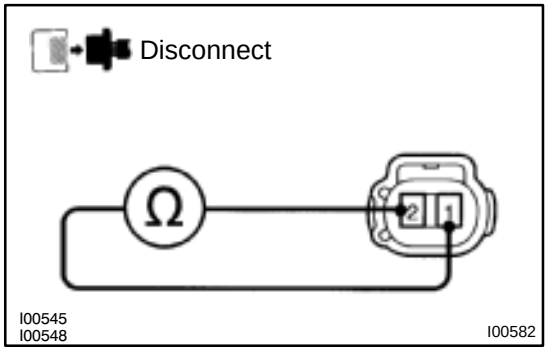

PREPARATION:

(a) Remove engine hood lock assembly.

(b) Disconnect engine hood courtesy switch connector.

CHECK:

Check continuity between terminals 1 and 2 when engine hood lock is locked and unlocked.

OK:

Engine hood lock	Tester connection	Specified condition
LOCK	–	No continuity
UNLOCK	1 – 2	Continuity

NG → **Replace engine hood courtesy switch.**

OK

2	**Check harness and connector between theft deterrent and door lock ECU and switch, switch and body ground (See page IN–27).**

NG → **Repair or replace harness or connector.**

OK

Check and replace theft deterrent and door lock ECU (See page IN–27).

DI4QB–01

Headlight Control Relay Circuit

CIRCUIT DESCRIPTION

When the theft deterrent system is activated, it causes the Tr in the ECU to switch on and off at approximately 0.4 sec. intervals. This switches the headlight control relay on and off, thus flashing the headlights (See the wiring diagram below).

In this condition, if any of the following operations is done, the Tr in the ECU goes off and the headlight control relay switches off, thus stopping the headlights flashing:

(1) Unlock the front LH or RH door with key.
(2) Turn the ignition switch to ACC or ON position.
(3) Unlock the doors with the wireless door lock control system.
(4) Wait for approximately 1 minute.

WIRING DIAGRAM

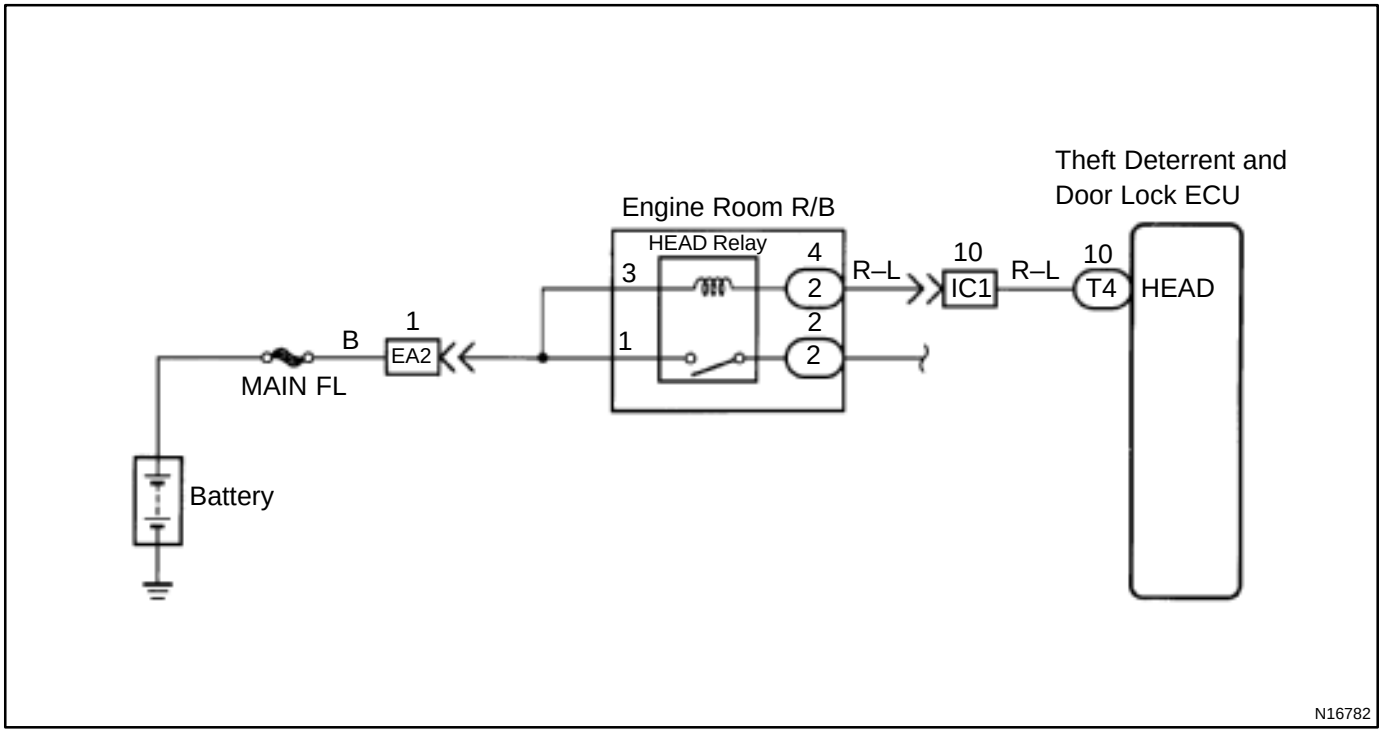

INSPECTION PROCEDURE

HINT:

The flow chart below is based on the premise that the headlights light up normally whenever the light control switch is operated. If headlight operation is not normal when the light control switch is operated, proceed to troubleshooting on page BE–2.

1	**Check voltage between terminal HEAD of theft deterrent and ECU connector and body ground.**

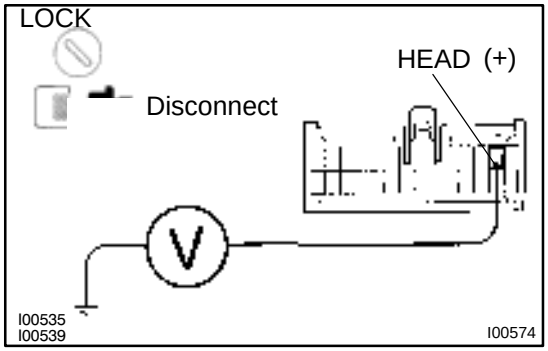

PREPARATION:

(a) Remove the glove compartment door.

(b) Disconnect the theft deterrent ECU connector.

CHECK:

Measure voltage between terminal HEAD of theft deterrent ECU connector and body ground.

OK:

Voltage: 10 – 14 V

OK → **Check and replace theft deterrent ECU.**

NG

Check and repair harness and connector between theft deterrent ECU and taillight control relay (See page IN–27).

DI4QA–01

Horn Relay Circuit

CIRCUIT DESCRIPTION

When the theft deterrent system is activated, it causes the Tr in the ECU to switch on and off in approximately 0.4 sec. cycles. This switches the horn relay on and off, thus the horns blow (See the wiring diagram below). In this condition, if any of the following operations is done, the Tr in the ECU goes off and the horn relay switches off, thus stopping the horns from blowing:

(1) Unlock the front LH or RH door with key.
(2) Turn the ignition switch to ACC or ON position.
(3) Unlock the doors with the wireless door lock control system.
(4) Wait for approximately 60 seconds.

WIRING DIAGRAM

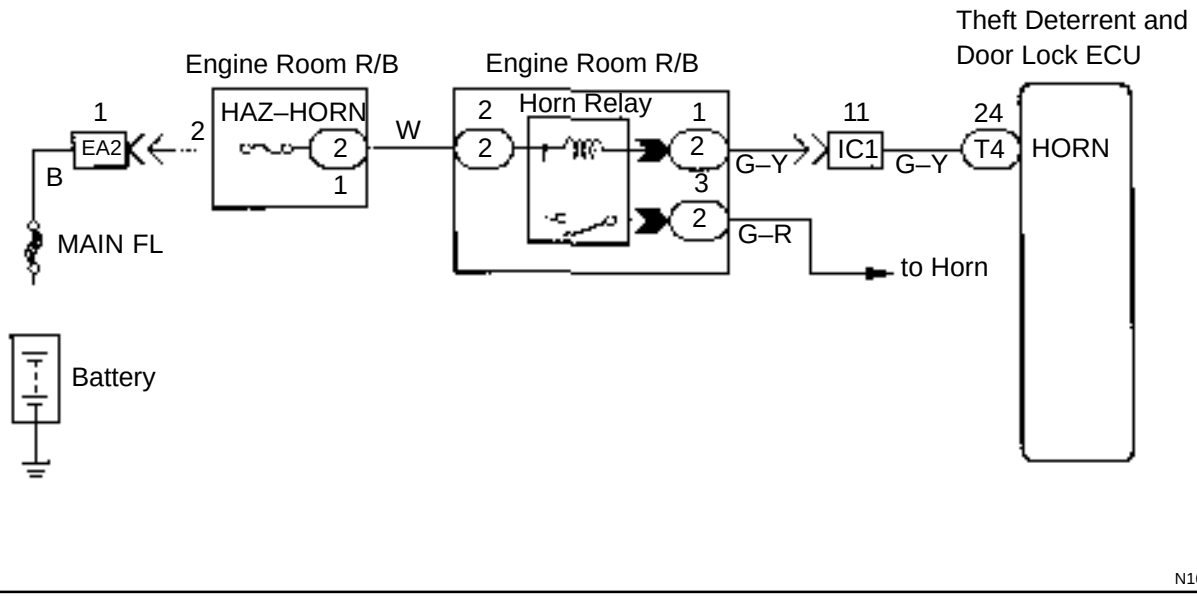

N16781

INSPECTION PROCEDURE

HINT:

The flow chart below is based on the premise that the horns blow normally whenever the horn switch is operated. If horn operation is not normal when the horn switch is operated, check the horn switch.

1	**Check voltage between terminal HORN of theft deterrent and ECU connector and body ground.**

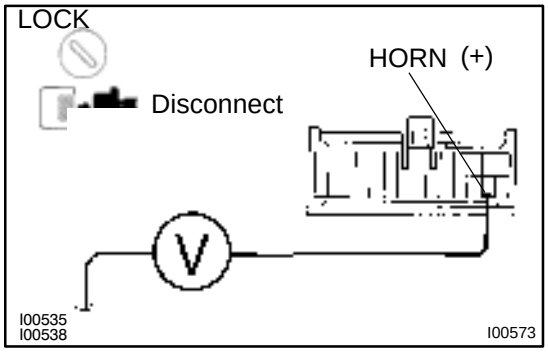

PREPARATION:

(a) Remove the glove compartment door.

(b) Disconnect the theft deterrent ECU connectors.

CHECK:

Measure voltage between terminal HORN of theft deterrent ECU connector and body ground.

OK:

Voltage: Battery positive voltage.

OK → **Check and replace theft deterrent ECU.**

NG

Check and repair harness and connector between theft deterrent ECU and horn relay.

Ignition Switch Circuit

CIRCUIT DESCRIPTION

When the ignition switch is turned to the ACC position, battery positive voltage is applied to the terminal ACC of the ECU. Also, if the ignition switch is turned to the ON position, battery positive voltage is applied to the terminal ACC of the ECU. When the battery positive voltage is applied to the terminal ACC of the ECU while the theft deterrent system is activated, the warning stops.

WIRING DIAGRAM

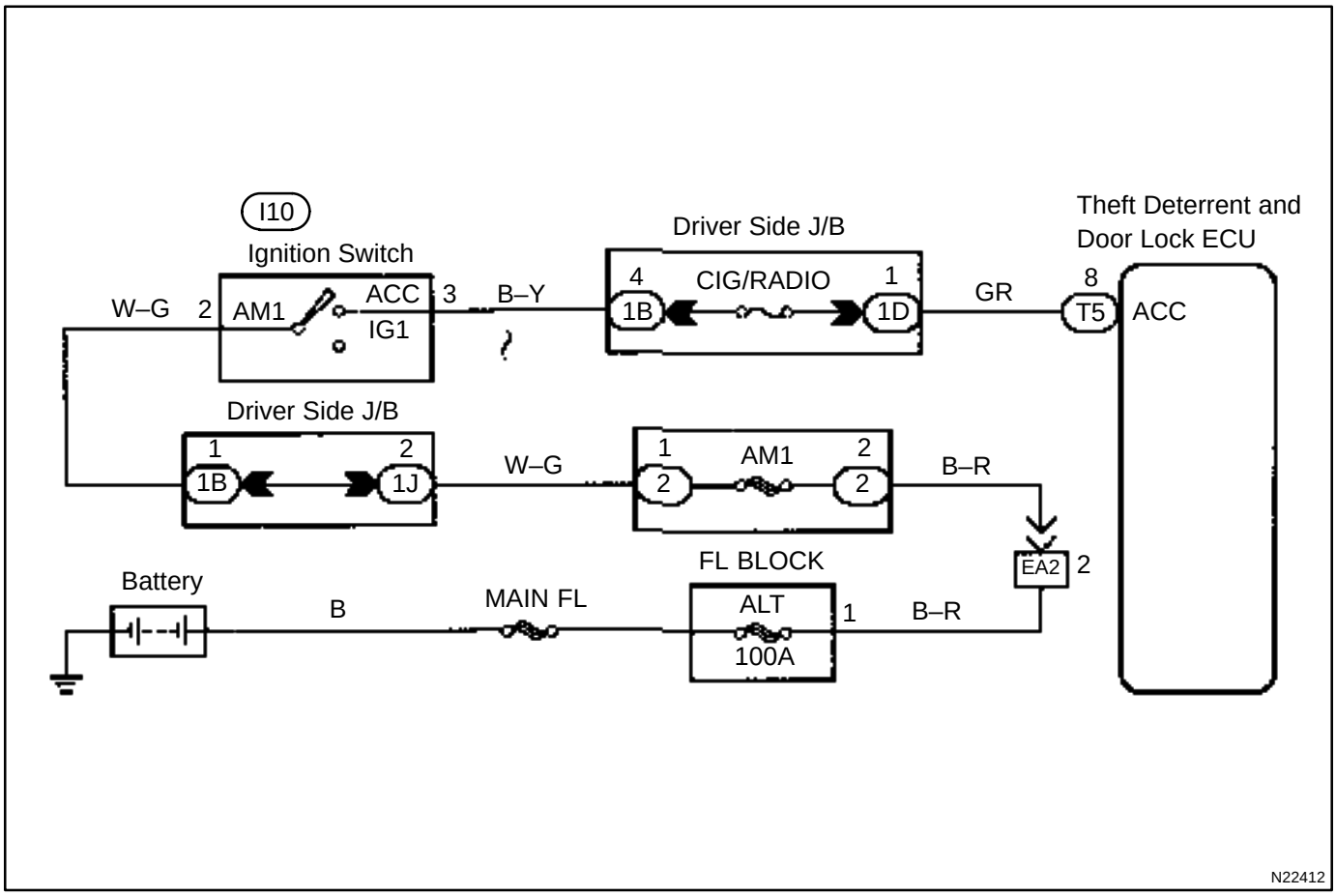

INSPECTION PROCEDURE

1	**Check CIG/RADIO fuse.**

● **Instrument Panel Junction Block**

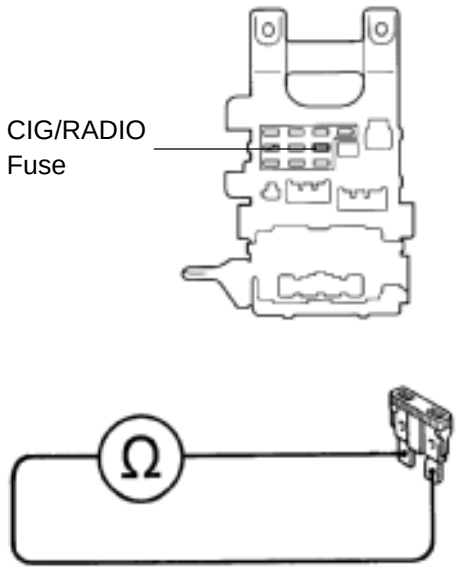

I00541
I00542 I00576

PREPARATION:

(a) Remove the fuse box opening cover.

(b) Remove CIG/RADIO fuse from instrument panel junction block.

CHECK:

Check continuity of CIG/RADIO fuse.

OK:

Continuity

NG → **Check for short in all the harness and components connected to the CIG/RADIO fuse (See attached wiring diagram).**

OK

2	Check voltage between terminal ACC of theft deterrent ECU and body ground.

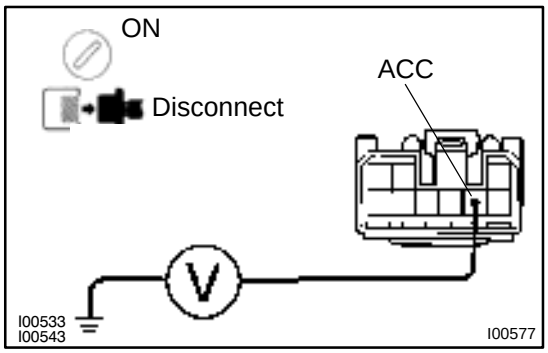

PREPARATION:

(a) Remove the glove compartment door.
(b) Disconnect the theft deterrent ECU connectors.
(c) Turn ignition switch ON.

CHECK:

Measure voltage between terminal ACC of theft deterrent ECU connector and body ground.

OK:

Voltage: 10 – 14 V

OK → **Check and replace theft deterrent ECU.**

NG

Check and repair harness and connector theft deterrent ECU and battery (See page IN–27).

DI4Q7–01

CIRCUIT INSPECTION

Indicator Light Circuit

CIRCUIT DESCRIPTION

When the theft deterrent system is preparing to set, this circuit lights up the indicator light. When the system has been set, it continually turns the indicator light on for 1 second and turns it off for 1 second, thus blinking the indicator light.

WIRING DIAGRAM

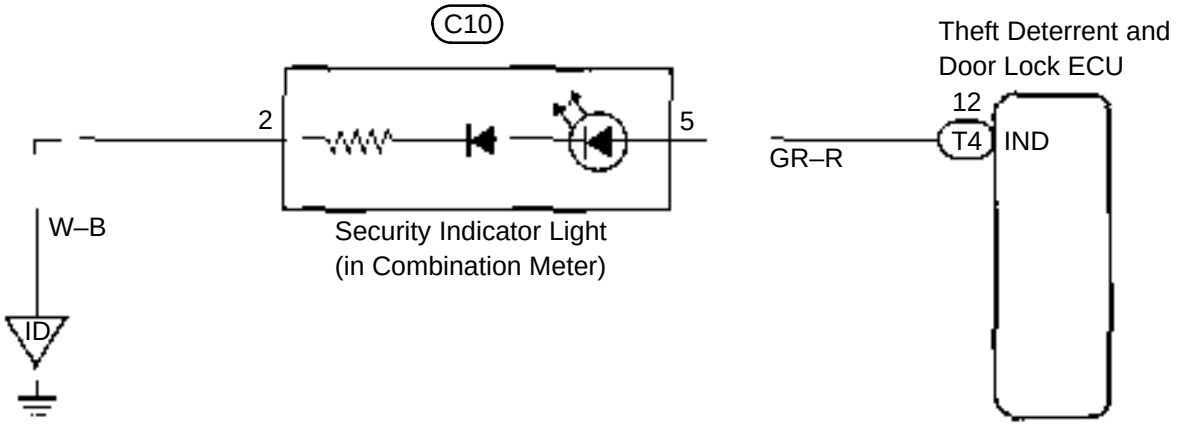

INSPECTION PROCEDURE

1	**Check indicator light.**

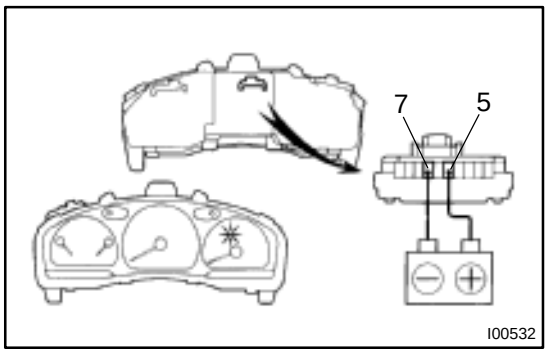

PREPARATION:

(a) Remove the combination meter.

(b) Disconnect the connector ”C”.

CHECK:

Connect positive ⊕ lead to terminal 5 and negative ⊖ lead to terminal 7 of indicator light connector.

OK:

Indicator light comes on.

NG → **Replace tachometer.**

OK

2	**Check harness and connector between theft deterrent ECU and indicator light, indicator light and body ground (See page IN–27).**

NG → **Repair or replace harness or connector.**

OK

Check and replace theft deterrent ECU.*1

*1: When there is a malfunction that the theft deterrent system cannot be set, proceed to the next numbered circuit inspection shown on matrix chart (See page DI–273).

DI4QF–01

Luggage compartment Door Courtesy Switch Circuit

CIRCUIT DESCRIPTION

The luggage compartment door courtesy switch goes on when luggage compartment door is opened and goes off when the luggage compartment door is closed.

WIRING DIAGRAM

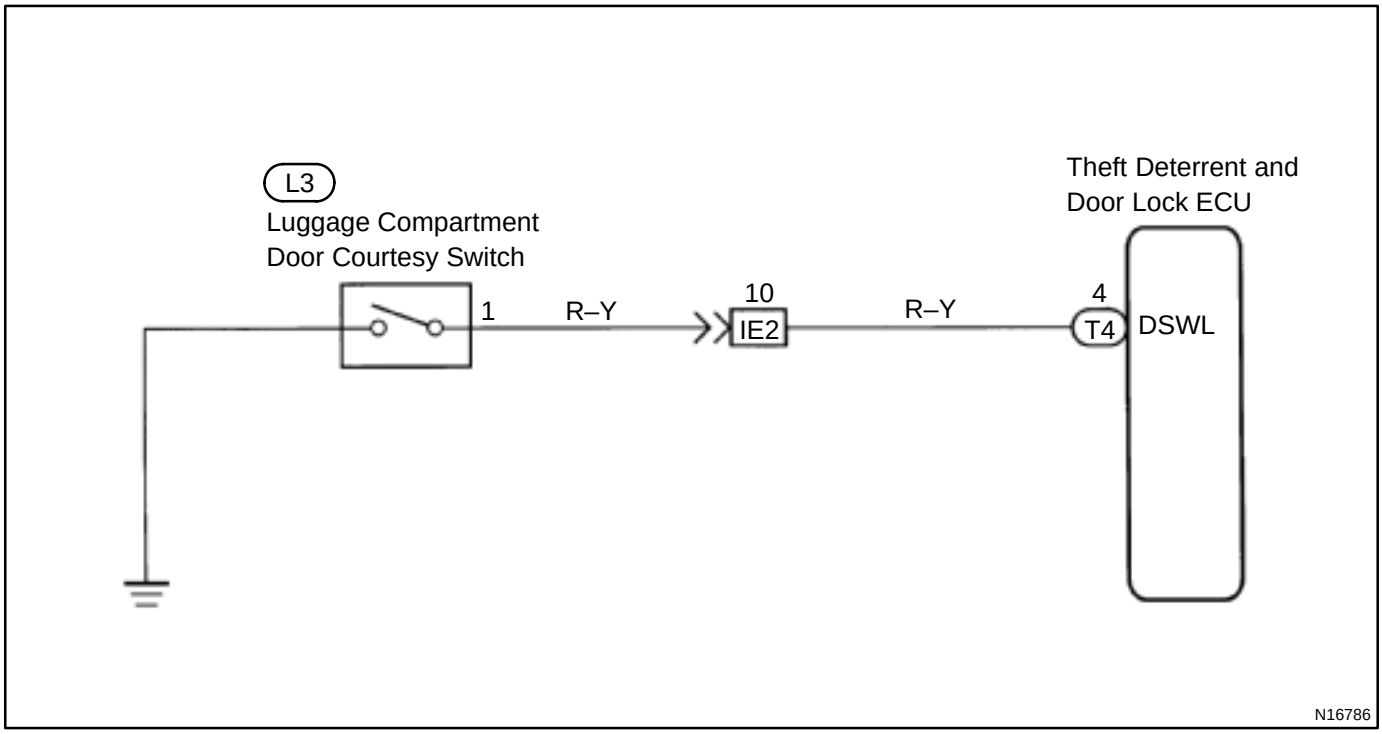

INSPECTION PROCEDURE

1	**Check operation of luggage compartment door courtesy light.**

CHECK:

Check that luggage compartment door courtesy light goes off when luggage compartment door courtesy switch is pushed, and comes on when switch is not pushed.

NG → **Check and repair luggage compartment door courtesy light circuit (See page BE–23).**

OK →

2	**Check for open in harness and connector between theft deterrent ECU and luggage compartment door courtesy switch (See page IN–27).**

NG → **Repair or replace harness or connectors.**

OK

Check and replace theft deterrent ECU.*1

*1: When there is a malfunction that the theft deterrent system cannot be set, proceed to the next numbered circuit inspection shown on matrix chart (See page DI–273).

DI4QE–01

Luggage Compartment Door Key Lock and Unlock Switch Circuit

CIRCUIT DESCRIPTION

The luggage compartment door key lock and unlock switch goes on when the luggage compartment door key cylinder is turned to the unlock side with the key.

WIRING DIAGRAM

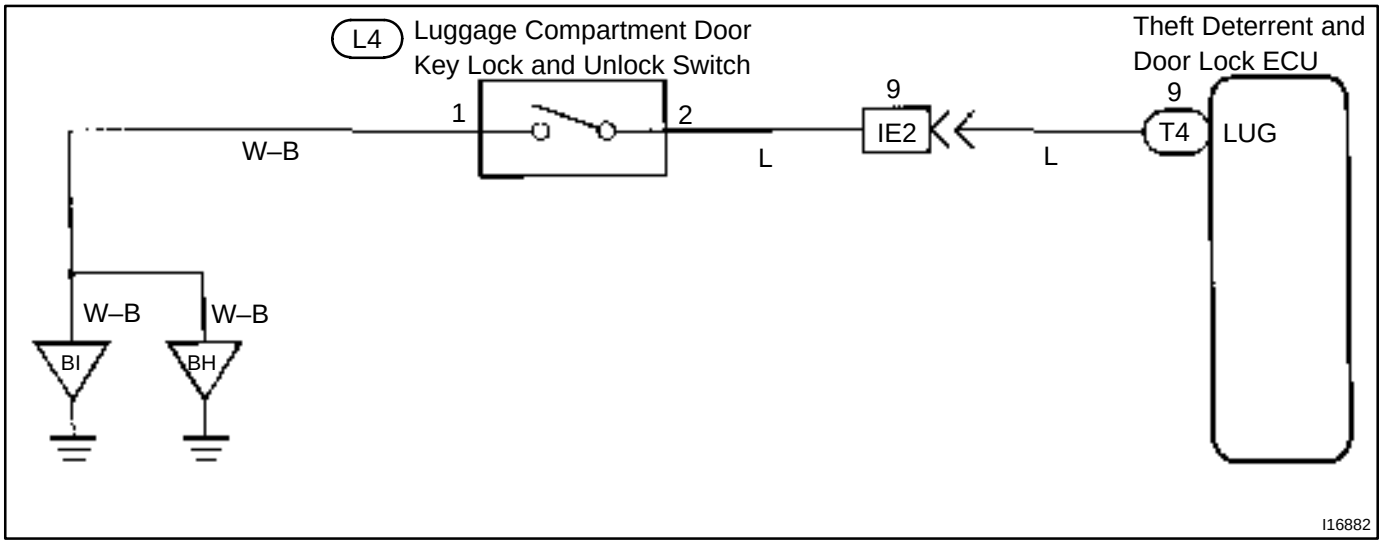

INSPECTION PROCEDURE

1	**Check voltage between terminal 1 of luggage compartment door key lock and unlock switch connector and body ground.**

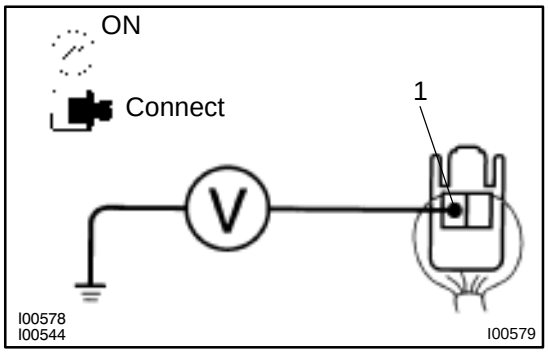

PREPARATION:

(a) Remove luggage compartment door trim.

(b) Turn ignition switch ON.

CHECK:

Measure voltage between terminal 1 of luggage compartment door key lock and unlock switch connector and body ground, when the key is turned to the unlock side and not turned.

OK:

Key operation	Voltage
Turned to the unlock side	0 V
Not turned	Battery positive voltage

OK → **Check and replace theft deterrent ECU.*1**

NG

2	Check luggage compartment door key lock and unlock switch.

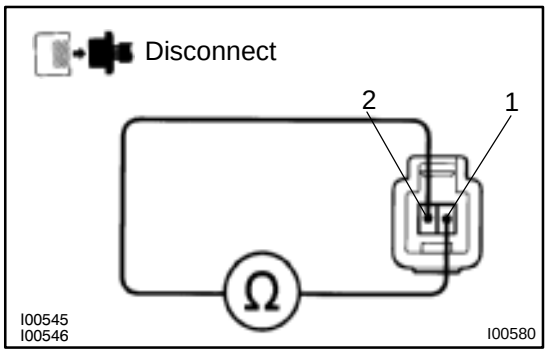

PREPARATION:

Disconnect luggage compartment door key lock and unlock switch connector.

CHECK:

Check continuity between terminals 1 and 2, when the key is turned to the unlock side and not turned.

OK:

Key operation	Tester connection	Specified condition
Turned to unlock	1 – 2	Continuity
Not turned	–	No continuity

NG → **Repair or replace luggage compartment door key lock and unlock switch.**

OK ↓

3	Check harness and connector between theft deterrent ECU and key lock and unlock switch, key lock and unlock switch and body ground (See page IN–27).

NG → **Repair or replace harness or connector.**

OK ↓

Check and replace theft deterrent ECU.

*1: When there is a malfunction that the theft deterrent system cannot be set, proceed to the next numbered circuit inspection shown on matrix chart (See page DI–273).

DI4Q8–01

Starter Relay Circuit

CIRCUIT DESCRIPTION

When the theft deterrent system is activated, contact (a) in the ECU becomes open, creating an open circuit in terminal SRLY circuit and making the starter inoperative (starter cut).
In this condition, if one of the following operations is done, the contact (a) in the ECU is grounded, thus canceling the starter cut:

(1) Unlock the front LH or RH door with key.
(2) Unlock the doors with the wireless door lock control system.

WIRING DIAGRAM

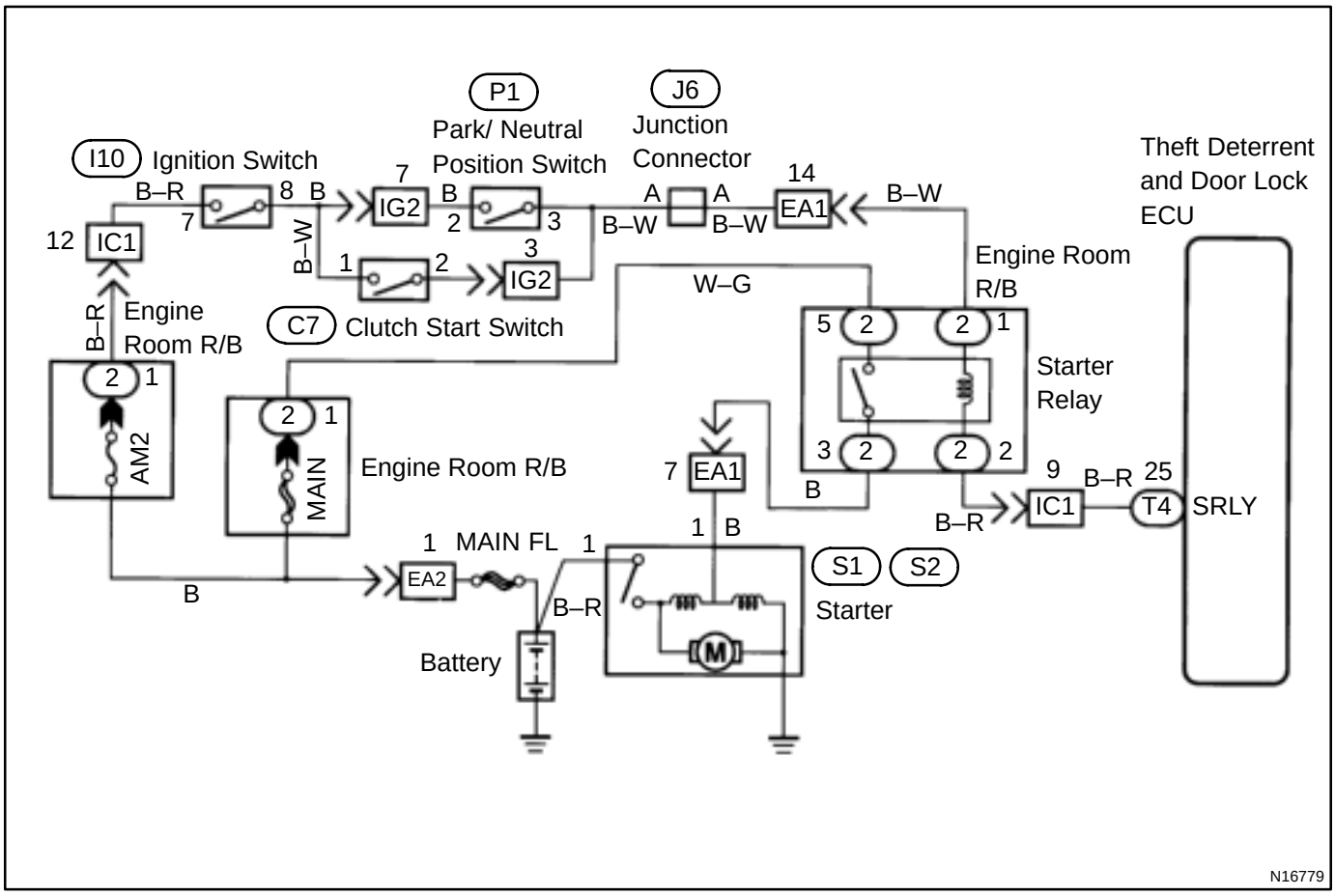

INSPECTION PROCEDURE

HINT:

This troubleshooting is based on the premise that engine cranking occurs.

If the engine does not crank, proceed to the engine troubleshooting on DI–1

1	**Check voltage between terminal SRLY of theft deterrent ECU connector and body ground.**

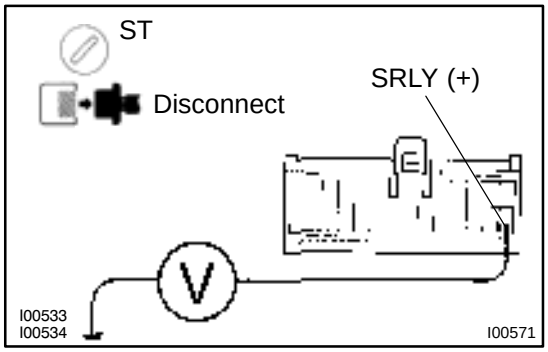

PREPARATION:

(a) Remove the glove compartment door.

(b) Disconnect the theft deterrent ECU connector.

(c) Transmission in neutral position.

CHECK:

Measure voltage between terminal SRLY of theft deterrent ECU connector and body ground, when ignition switch is turned to ST position.

OK:

Voltage: 10 – 14 V

OK → **Check and replace theft deterrent ECU.**

NG

Check and repair harness and connector between starter and theft deterrnet ECU (See page IN–27).

Taillight Control Relay Circuit

CIRCUIT DESCRIPTION

When the theft deterrent system is activated, it causes the Tr in the ECU to switch on and off at approximately 0.4 sec. intervals. This switches the taillight control relay on and off, thus flashing the taillights (See the wiring diagram below).

In this condition, if any of the following operations is done, the Tr in the ECU goes off and the taillight control relay switches off, thus stopping the taillights flashing:

(1) Unlock the front LH or RH door with key.
(2) Turn the ignition switch to ACC or ON position.
(3) Unlock the doors with the wireless door lock control system.
(4) Wait for approximately 1 minute.

WIRING DIAGRAM

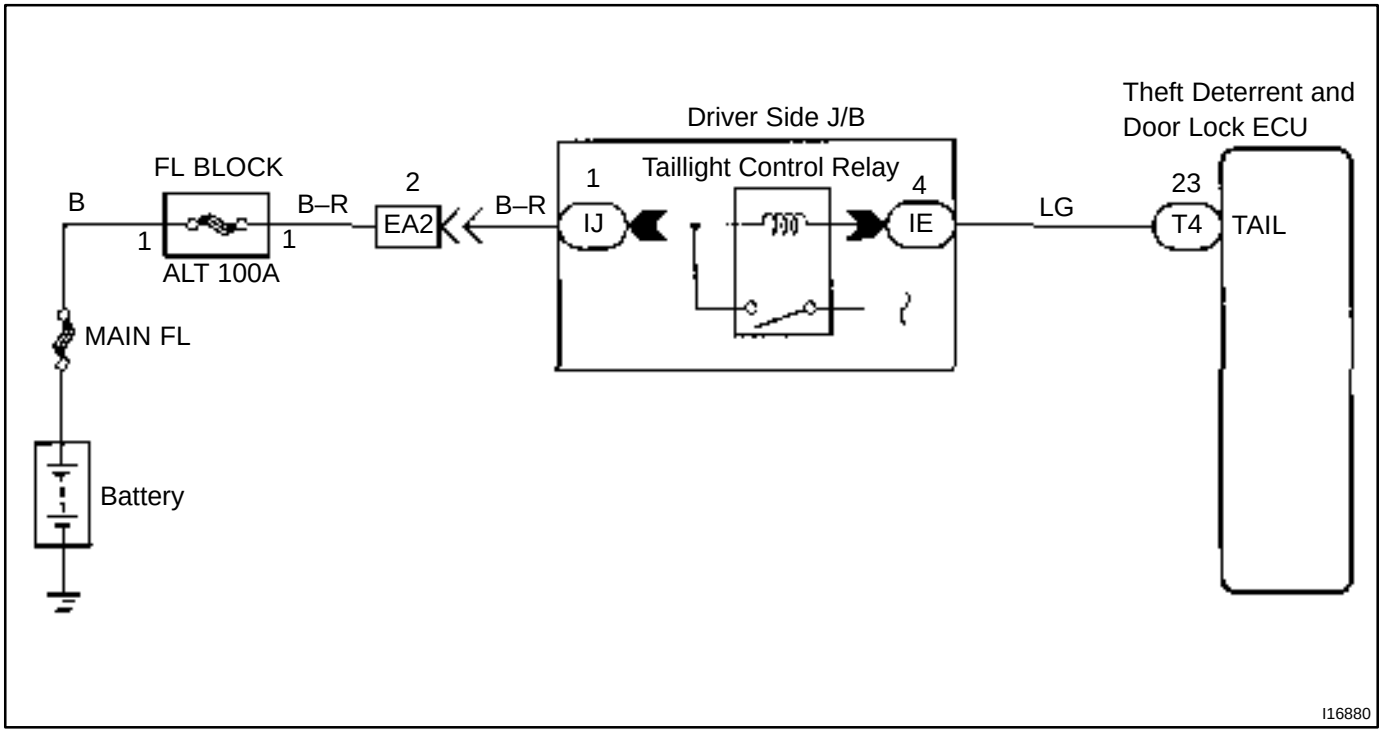

INSPECTION PROCEDURE

HINT:

The flow chart below is based on the premise that the taillights light up normally whenever the light control switch is operated. If headlight operation is not normal when the light control switch is operated, proceed to troubleshooting on page BE–2.

1	**Check voltage between terminal TAIL of theft deterrent ECU connector and body ground.**

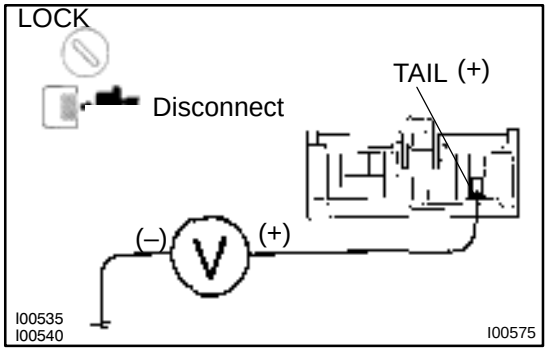

PREPARATION:

(a) Remove the glove compartment door.

(b) Disconnect the theft deterrent ECU connector.

CHECK:

Measure voltage between terminal TAIL of theft deterrent ECU connector and body ground.

OK:

Voltage: 10 – 14 V

OK → **Check and replace theft deterrent ECU.**

OK

Check and repair harness and connector between theft deterrent ECU and taillight control relay (See page IN–27).

DI4Q9–01

Theft Deterrent Horn Circuit

CIRCUIT DESCRIPTION

When the theft deterrent system is activated, contact (a) and contact (b) in the ECU close alternately in cycles of approximately 0.2 sec., causing the theft deterrent horn to blow (See the wiring diagram below).
In this condition, if any of the following operations is done, the contact (a) in the ECU opens, thus stopping the theft deterrent horn from blowing:

(1) Unlock the front LH or RH door with key.
(2) Turn the ignition switch to ACC or ON position.
(3) Unlock the doors with the wireless door lock control system.
(4) Wait for approximately 1 minute.

WIRING DIAGRAM

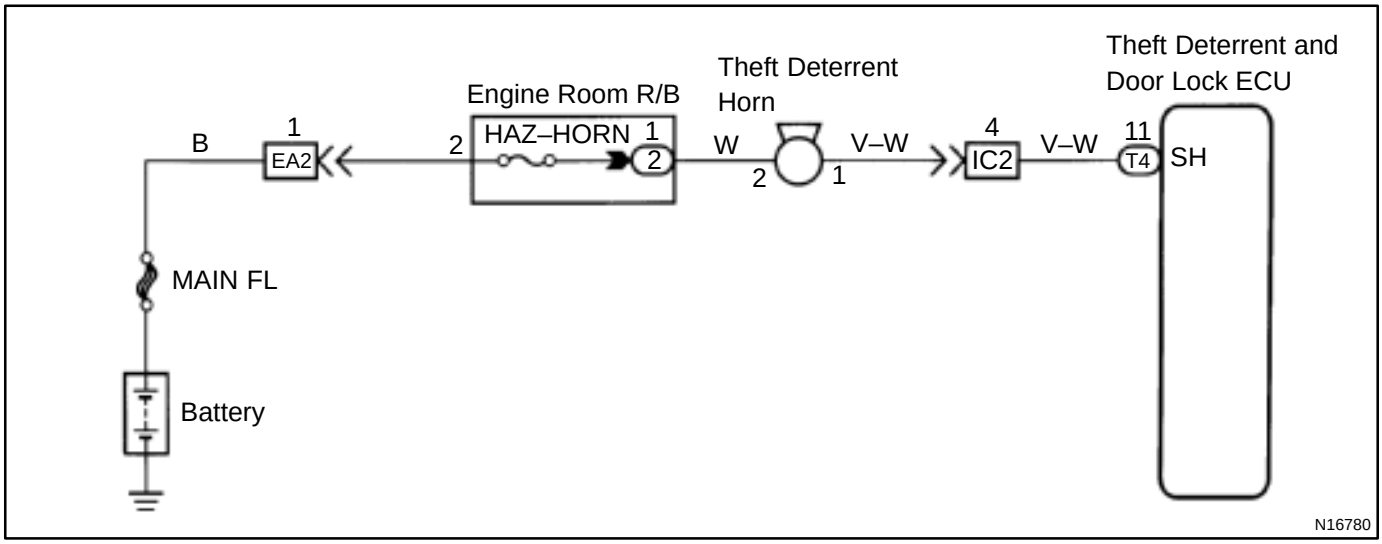

INSPECTION PROCEDURE

1	**Check voltage between terminal 1 of theft deterrent horn connector and body ground.**

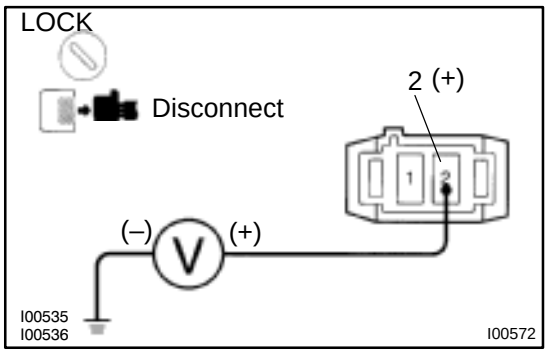

PREPARATION:
Remove the theft deterrent horn and disconnect the connector.
CHECK:
Measure voltage between terminal 2 of theft deterrent horn connector and body ground.
OK:
Voltage: 10 – 14 V

NG → **Check and repair harness and connector between HORN fuse and theft deterrent horn.**

OK

2	**Check theft deterrent horn.**

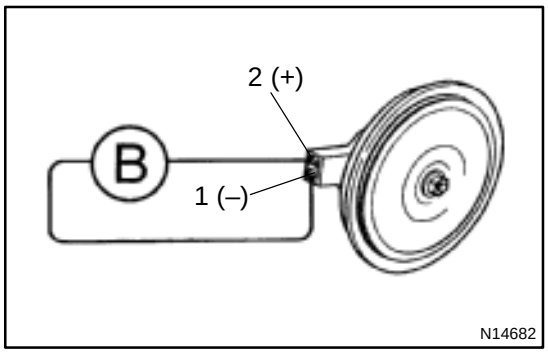

CHECK:
Connect positive ⊕ lead to terminal 2 and negative ⊖ lead to terminal 1 to theft deterrent horn connector.
OK:
Theft deterrent horn blows.

NG → **Replace theft deterrent horn.**

OK

3	**Check harness and connector between theft deterrent ECU and theft deterrent horn (See page IN–27).**

NG → **Check and repair harness or connector.**

OK

Check and replace theft deterrent ECU.

DI4Q2–01

CUSTOMER PROBLEM ANALYSIS CHECK

THEFT DETERRENT SYSTEM Check Sheet

Inspector's name: _____

Customer's Name		**Registration No.**	
		Registration Year	
		Frame No.	
Date of Vehicle Brought in	/ /	**Odometer Reading**	**km Mile**

Date Problem First Occurred		/ /
Frequency Problem Occurs		☐ Constant ☐ Sometimes (Times per day, month) ☐ Once only
Weather Conditions When Problem Occurred	**Weather**	☐ Fine ☐ Cloudy ☐ Rainy ☐ Snowy ☐ Various/Others
	Outdoor temperature	☐ Hot ☐ Warm ☐ Cool ☐ Cold (Approx. °F (°C))

Problem Symptom

☐ Theft deterrent system cannot be set.		
☐ Indicator light does not flash when the theft deterrent system is set. (It stays on or does not light at all.)		
☐ Theft deterrent system does not operate.	☐ When unlocked using the door lock knob. ☐ When the engine hood is opened.	Malfunction ☐ Horns only ☐ Theft deterrent horn only ☐ Headlights only ☐ Taillights only ☐ Starter cut only ☐ Door lock operation only
☐ System cannot be canceled once set.	☐ When door is unlocked using key or wireless door lock control system. ☐ When the key is inserted in the ignition key cylinder and turned to ACC or ON position. (However, only when the system has never operated) ☐ When the luggage compartment door is opened with the key.	
☐ System cannot be canceled during warning operation.	☐ When door is unlocked using key or wireless door lock control system. ☐ When the key is inserted in the ignition key cylinder and turned to ACC or ON position.	
☐ Warning operation starts when the system is set and the door or luggage compartment door is opened with the key.		
☐ Others.		

THEFT DETERRENT SYSTEM

HOW TO PROCEED WITH TROUBLESHOOTING

DI4Q1–01

HINT:

Troubleshooting of the theft deterrent system is based on the premise that the door lock control system is operating normally. Accordingly, before troubleshooting the theft deterrent system, first make certain that the door lock control system is operating normally.

For troubleshooting using a volt/ohm meter, see pages DI–276 to DI–297.

Be sure to use troubleshooting procedure appropriate to the diagnostic tool being used.

Perform troubleshooting in accordance with the procedure on the following page.

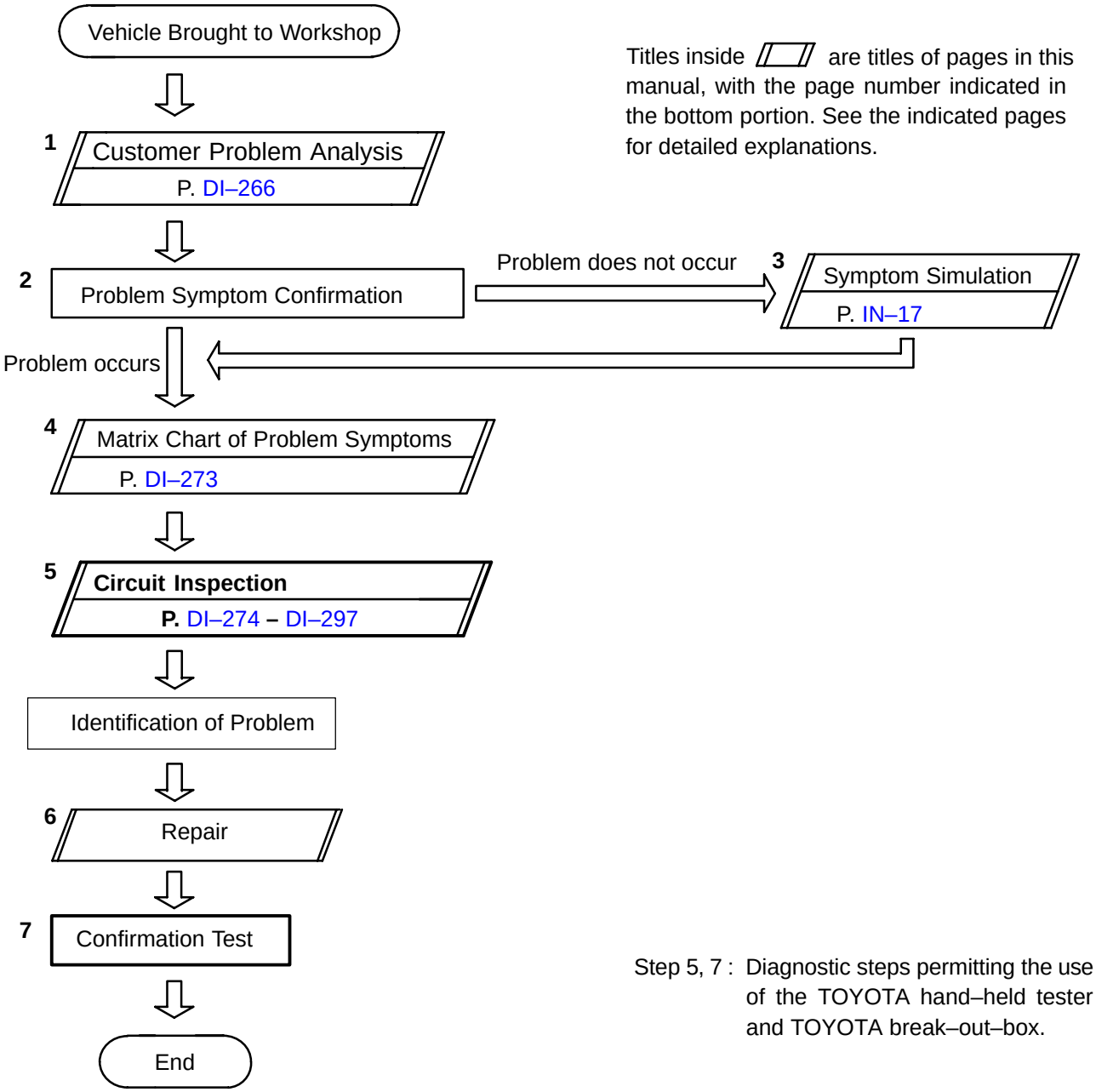

Titles inside ▱ are titles of pages in this manual, with the page number indicated in the bottom portion. See the indicated pages for detailed explanations.

Step 5, 7 : Diagnostic steps permitting the use of the TOYOTA hand–held tester and TOYOTA break–out–box.

PARTS LOCATION

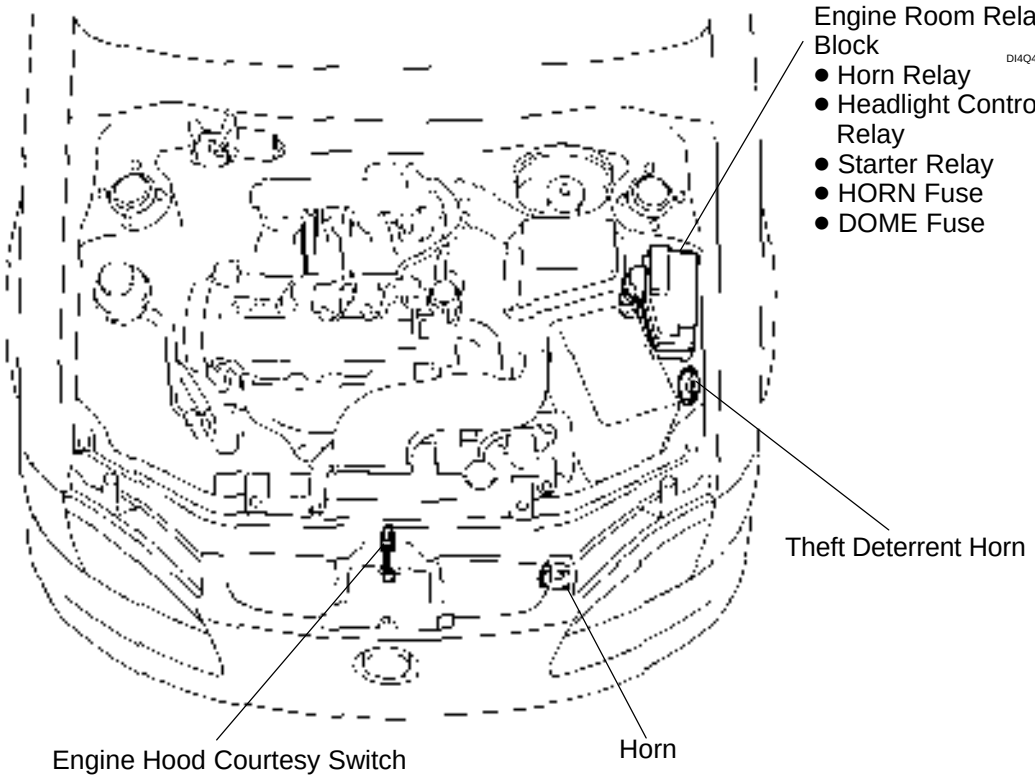

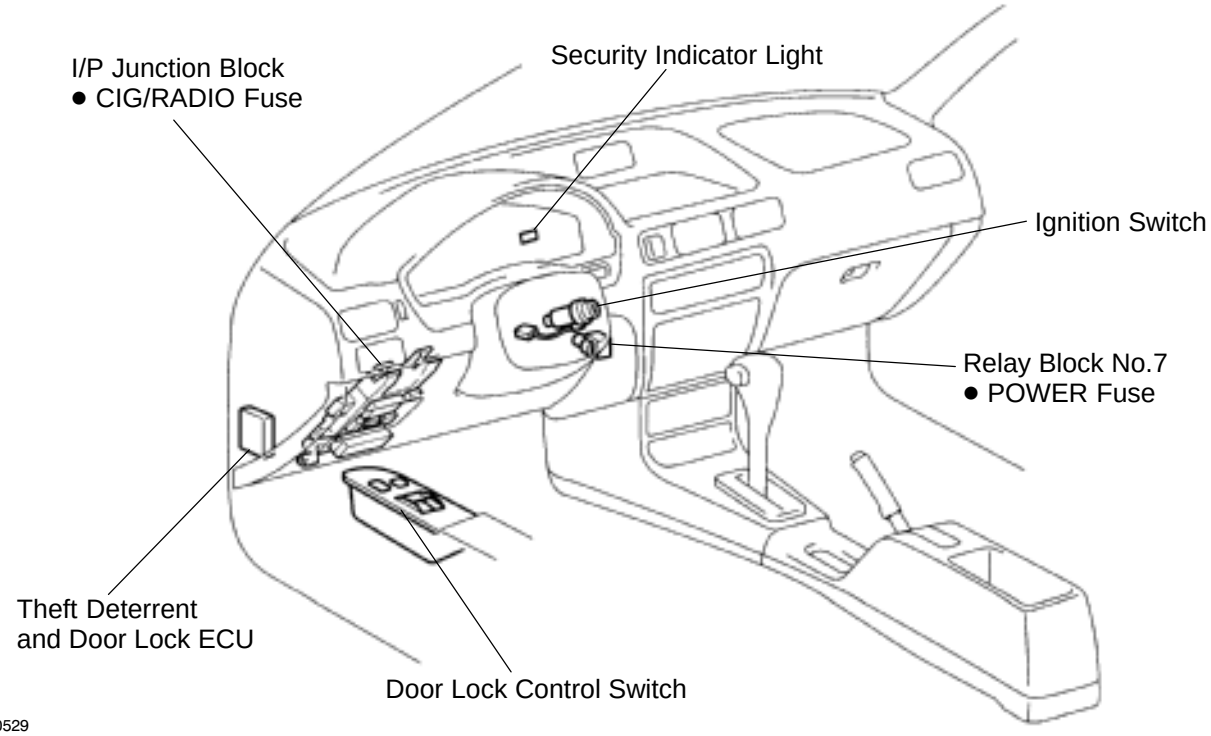

I00529
I00530

I00570

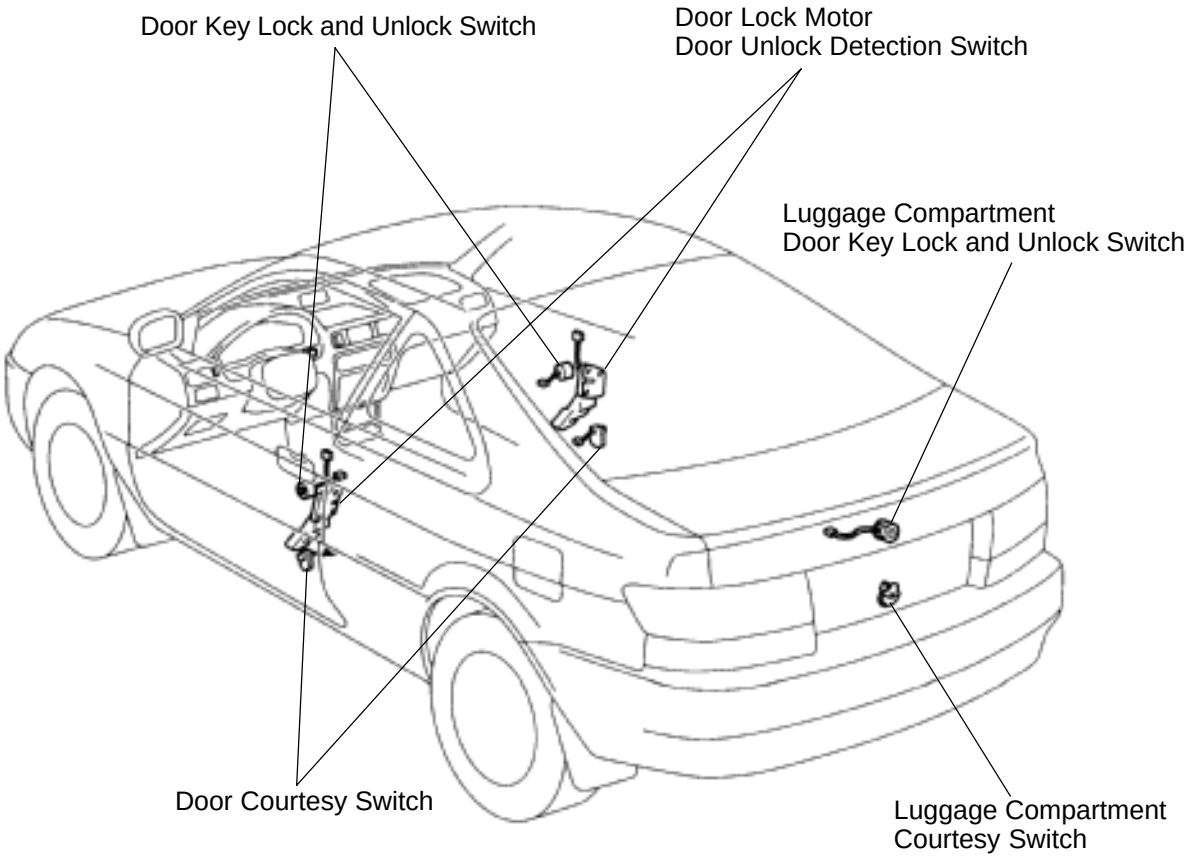
Door Key Lock and Unlock Switch
Door Lock Motor
Door Unlock Detection Switch
Luggage Compartment
Door Key Lock and Unlock Switch
Door Courtesy Switch
Luggage Compartment
Courtesy Switch

I00531

DI4Q3–01

PRE–CHECK

1. SETTING OF THE THEFT DETERRENT SYSTEM

Setting Conditions

(a) Close all the doors.
(b) Close the engine hood and luggage compartment door.
(c) Remove the ignition key from the ignition key cylinder.

Setting Operation

When any of the following operations (a), (b) or (c) is performed, the theft deterrent indicator light will light up as described.

(1) Lock the left or right front door using the key. (All doors are locked by key–interlinked lock operation).
(2) Lock all the doors using the wireless door lock control system.
(3) With the rear doors locked and with one of the front doors locked, lock the other front door without using the key (keyless door lock).

Elapsed time after operation	Indicator light
Within about 30 seconds	Lights up
After about 30 seconds	Blinks *1

*1: 1 sec. on, 1 sec. off

HINT:

When the theft deterrent system is set, doors cannot be locked or unlocked with the door lock control switch and the luggage compartment door cannot be unlocked with the luggage compartment door opener switch.

2. CANCELING OF THE THEFT DETERRENT SYSTEM IN THE SET CONDITION

Check if the theft deterrent indicator light is blinking.

Canceling Operation

When any of the following operations (a), (b), (c) or (d) is performed, the theft deterrent system is canceled and indicator light will go off.

(1) Unlock the left or right front door using the key.
(2) Unlock all the doors using the wireless door lock control system.
(3) Insert the ignition key in the ignition key cylinder and turn it to the ACC or ON position. (This is operative only when the theft deterrent system has never operated.)
(4) Unlock the luggage compartment door with the key.*1

*1: The theft deterrent systems is temporarily canceled only while the luggage compartment door is open. Approximately 2 seconds after the luggage compartment door is closed, the theft deterrent system is reset.

3. CHECK OF THE THEFT DETERRENT SYSTEM OPERATION

Check if the theft deterrent indicator light is blinking.

When either the following operation (a) or (b) is performed, the system sounds the horns and theft deterrent horn and flashes the headlights and taillights for about one minute to alert. At the same time, the system disconnects the starter motor circuit and locks all doors (if all doors are not locked, the system repeats door locking operation every 2 seconds during the one minute alert time).

(1) Open the engine hood using the engine hood opener lever.

(2) Unlock any of the front or rear doors without key operation.

4. CANCELING OF THE THEFT DETERRENT SYSTEM IN OPERATING CONDITION

The theft deterrent operation can be canceled when any of the following conditions is met:

No.	Condition	Canceling Operation
1	Unlock left or right door with the key.	○
2	Unlock doors with wireless door lock control system.	○
3	Insert key into ignition key cylinder and turn it to ACC or ON position.	○
4	About 1 minute passes after theft deterrent operation begins.	Automatic stop *1

*1: In this case the theft deterrent system resets after about 2 seconds if all doors are closed.

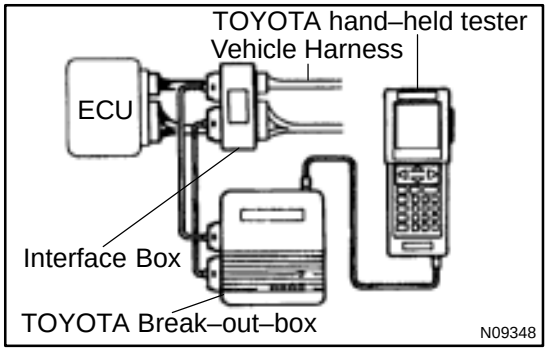

5. ECU TERMINAL VALUES MEASUREMENT BY USING TOYOTA BREAK–OUT–BOX AND TOYOTA HAND–HELD TESTER

(a) Hook up the TOYOTA break–out–box and TOYOTA hand–held tester to the vehicle.

(b) Read the ECU input/output values by following the prompts on the tester screen. Please refer to the TOYOTA brake–out–box operator's manual.

HINT:

TOYOTA hand–held tester has a "Snapshot" function. This records the measured data and is effective in the diagnosis of intermittent problems.

DI4Q6–01

PROBLEM SYMPTOMS TABLE

Proceed to the reference page shown in the matrix chart below for each malfunction symptom and troubleshoot for each circuit.

HINT:

Troubleshooting of the theft deterrent system is based on the premise that the door lock control system is operating normally. Accordingly, before troubleshooting the theft deterrent system, first make certain that the door lock control system is operating normally.

Details of Problem			Inspecting Circuit*1	See page
The theft deterrent system cannot be set			1. Indicator light circuit	DI–274
			2. Luggage compartment door key lock and unlock switch circuit	DI–289
			3. Luggage compartment door courtesy switch circuit	DI–291
			4. Door courtesy switch circuit	DI–293
			5. Door unlock detection switch circuit	DI–295
			6. Engine hood courtesy switch circuit	DI–297
The indicator light does not blink when system is set			Indicator light circuit	DI–274
When the system is set	When the rear door is unlocked	The system does not operate	Door unlock detection switch circuit	DI–295
	When the luggage compartment door is opened by a method other than the key		Luggage compartment door courtesy switch circuit	DI–291
	When the engine hood is opened		Engine hood courtesy switch circuit	DI–297
While the system is in warning operation	Horns do not sound		Horn relay circuit	DI–280
	Theft deterrent horn does not sound		Theft deterrent horn circuit	DI–278
	Headlights do not flash		Headlight control relay circuit	DI–282
	Taillights do not flash		Taillight control relay circuit	DI–284
	The starter cut is not cut off		Starter relay circuit	DI–276
	The rear door lock is not locked in unlock condition		Door unlock detection switch circuit	DI–295
When the system is set	It is not canceled when the ignition key is turned to ACC or ON position		Ignition switch circuit	DI–286
	It still operates when the luggage compartment door is opened with the key		Luggage compartment door key lock and unlock switch circuit	DI–289
System is still set even when a rear door is open			Door courtesy switch circuit	DI–293
Even when the system is not set	Horns sound		Horn relay circuit	DI–280
	Theft deterrent horn sounds		Theft deterrent horn circuit	DI–278
	Headlights stay on		Headlight control relay circuit	DI–282
	Taillights stay on		Taillight control relay circuit	DI–284

*1: If numbers are given to the circuit proceed with troubleshooting in the order indicated by those numbers.

DI4Q5–01

TERMINALS OF ECM

Theft Deterrent and Door Lock Control ECU

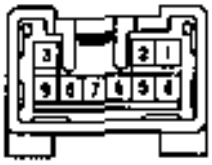

Connector ”B”

I00302 I00303

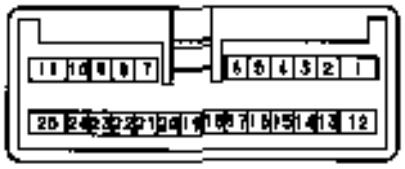

Connector ”A”

I00304

Symbols (Terminals No.)	Wiring Color	Condition	STD Value
+B ↔ Ground (A1 ↔ Ground)	L–Y ↔ Ground	Always.	10 – 14 V
CTY ↔ E (A3 ↔ B4)	R–W ↔ W–B	Door courtesy switch ”OFF” (Door closed)	1 MΩ or higher
		Door courtesy switch ”ON” (Door opened)	Below 1 Ω
DSWL ↔ E (A4 ↔ B4)	R–Y ↔ W–B	Luggage compartment door courtesy switch ”OFF” (Door closed)	1 MΩ or higher
		Luggage compartment door courtesy switch ”ON” (Door opened)	Below 1 Ω
L1 ↔ E (A5 ↔ B4)	R–Y ↔ W–B	Door lock control switch ”LOCK”	Below 1 Ω
		Door lock control switch ”OFF or ”UNLOCK”	1 MΩ or higher
UL3 ↔ E (A6 ↔ B4)	W–L ↔ W–B	Door key lock and unlock switch ”UNLOCK” (Driver’s door)	Below 1 Ω
		Door key lock and unlock switch ”LOCK” or ”OFF” (Driver’s door)	1 MΩ or higher
DSWD ↔ E (A7 ↔ B4)	R ↔ W–B	Door courtesy switch ”ON” (Driver’s door opened)	Below 1 Ω
		Door courtesy switch ”OFF” (Driver’s door closed)	1 MΩ or higher
UL1 ↔ E (A8 ↔ B4)	G–Y ↔ W–B	Door lock control switch ”UNLOCK”	Below 1 Ω
		Door lock control switch ”OFF” or ”LOCK”	1 MΩ or higher
HEAD ↔ E (A10 ↔ B4)	R–L ↔ W–B	Light control switch other than ”HEAD”	10 – 14 V
		Always	10 – 14 V
SH ↔ E (A11 ↔ B4)	V–W ↔ W–B	Always	10 – 14 V
IND ↔ E (A12 ↔ B4)	GR–R ↔ W–B	Ignition switch ”OFF”	1 MΩ or higher
DSWH ↔ E (A14 ↔ B4)	LG–B ↔ W–B	Engine hood courtesy switch ”ON”	Below 1 Ω
		Engine hood courtesy switch ”OFF”	1 MΩ or higher
LSWD ↔ E (A15 ↔ B4)	P–L ↔ W–B	Door unlock detection switch ”ON” (Driver’s door)	Below 1 Ω
		Door unlock detection switch ”OFF” (Driver’s door)	1 MΩ or higher
UL2 ↔ E (A16 ↔ B4)	W–L ↔ W–B	Door key lock and unlock switch ”UNLOCK” (Passenger’s door)	Below 1 Ω
		Door key lock and unlock switch ”LOCK” or ”OFF” (Passenger’s door)	1 MΩ or higher

DSWP ↔ E (A19 ↔ B4)	R ↔ W–B	Door courtesy switch ”ON” (Passenger's door opened)	Below 1 Ω
		Door courtesy switch ”OFF” (Passenger's door closed)	1 MΩ or higher
KSW ↔ E (A20 ↔ B4)	LG ↔ W–B	Key unlock warning switch ”ON” (Key is inserted into key cylinder)	Below 1 Ω
		Key unlock warning switch ”OFF”	1 MΩ or higher
LSWP ↔ E (A21 ↔ B4)	P ↔ W–B	Door unlock detection switch ”OFF” (Passenger's door)	1 MΩ or higher
		Door unlock detection switch ”ON” (Passenger's door)	Below 1 Ω
L2 ↔ E (A22 ↔ B4)	W–G ↔ W–B	Door key lock and unlock switch ”LOCK”	Below 1 Ω
		Door key lock and unlock switch ”UNLOCK” or ”OFF”	1 MΩ or higher
TAIL ↔ E (A23 ↔ B4)	LG ↔ W–B	Always	10 – 14 V
HORN ↔ E (A24 ↔ B4)	G–Y ↔ W–B	Always	10 – 14 V
SRLY ↔ E (A25 ↔ B4)	B–R ↔ W–B	Ignition switch ”ST” (When park/ neutral position switch ”P”)	10 – 14 V
ACT– ↔ ACT+ (B2 ↔ B3)	R ↔ G	Ignition switch ”OFF”	Below 50 Ω
E ↔ Ground (B4 ↔ Ground)	W–B ↔ Ground	Always	Below 1 Ω
ACC ↔ E (B8 ↔ B4)	GR ↔ W–B	Ignition switch ”ACC”	10 – 14 V
+B2 ↔ Ground (B9 ↔ Ground)	L ↔ Ground	Always	10 – 14 V

EMISSION CONTROL SYSTEM

EC079–02

PURPOSE

The emission control systems are installed to reduce the amount of HC, CO and NOx exhausted from the engine ((3) and (4)), to prevent the atmospheric release of blow–by gas–containing HC (1) and evaporated fuel containing HC being released from the fuel tank (2).
The function of each system is shown in the following table.

System	Abbreviation	Function
(1) Positive Crankcase Ventilation	PCV	Reduces HC
(2) Evaporative Emission Control	EVAP	Reduces evaporated HC
(3) Three–Way Catalytic Converter	TWC	Reduces HC, CO and NOx
(4) Sequential Multiport Fuel Injection *	SFI	Injects a precisely timed, optimum amout of fuel for reduced exhaust emissions

Remark: * For inspection and repair of the SFI system, refer to the SF section this manual.

EVAPORATIVE EMISSION (EVAP) CONTROL SYSTEM

EC07A–04

INSPECTION

1. VISUALLY INSPECT LINES AND CONNECTIONS

Look for loosen connections, sharp bends or damage.

2. VISUALLY INSPECT FUEL TANK

Look for deformation, cracks or fuel leakage.

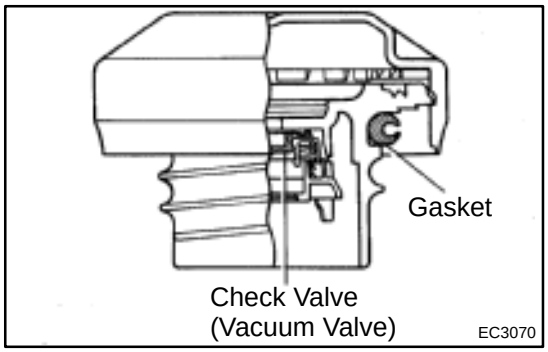

3. VISUALLY INSPECT FUEL TANK CAP

Check if the cap and or gasket are deformed or damaged.
If necessary, repair or replace the cap.

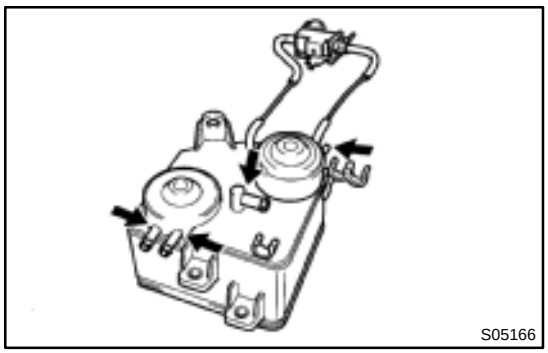

4. DISCONNECT EVAP HOSES FROM CHARCOAL CANISTER

5. VISUALLY INSPECT CHARCOAL CANISTER

Look for cracks or damage.

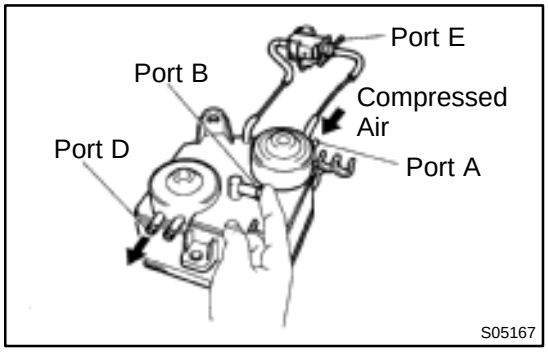

6. CHECK FOR CLOGGED FILTER, AND STUCK CHECK VALVE AND DIAPHRAGM

(a) Install a plug to port E.

(b) While holding port B closed, blow air (1.76 kPa, 18 gf/cm^2, 0.26 psi) into port A and check that air flows from port D.

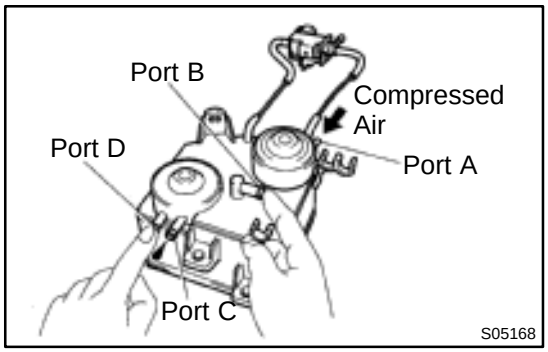

(c) While holding port B and port D closed, blow air (1.76 kPa, 18 gf/cm^2, 0.26 psi) into port A and check that air does not flow from port C.

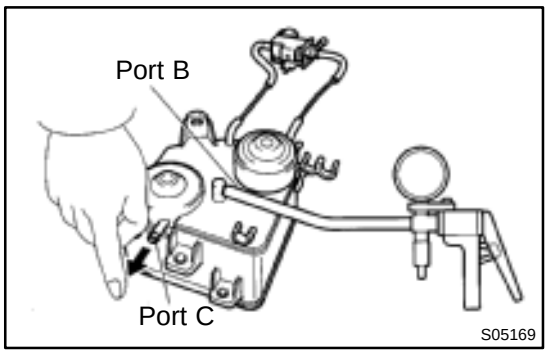

(d) Apply vacuum (3.43 kPa, 26 mmHg, 1.01 in.Hg) to port B, check that the vacuum does not decrease when port C is closed, and check that the vacuum decreases when port C is released.

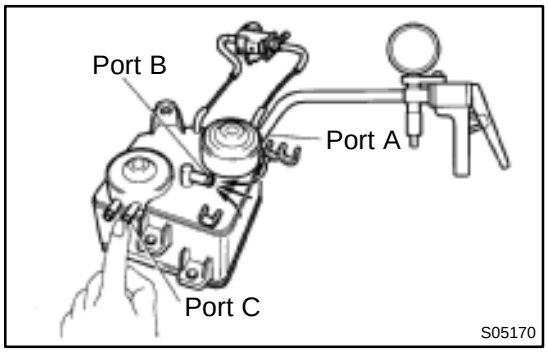

(e) While holding port C closed, apply vacuum (1.23 kPa, 9.2 mmHg, 0.36 in.Hg) to port A and check that air flows into port B.

If a problem is found, replace the charcoal canister.

(f) Remove the plug.

7. RECONNECT EVAP HOSES

8. INSPECT VSV FOR EVAP (See page SF–40)

9. INSPECT VSV FOR VAPOR PRESSURE SENSOR (See page SF–42)

10. INSPECT VAPOR PRESSURE SENSOR (See page SF–50)

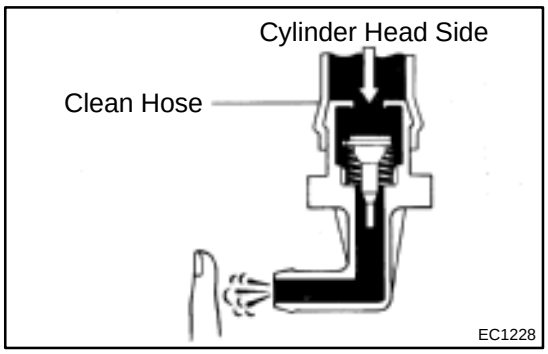

POSITIVE CRANKCASE VENTILATION (PCV) SYSTEM

EC07D–01

INSPECTION

1. REMOVE PCV VALVE

2. ATTACH CLEAN HOSE TO PCV VALVE

3. BLOW AIR FROM CYLINDER HEAD SIDE

Check that air passes through easily.

NOTICE:

Do not suck air through the valve.

Petroleum substances inside the valve are harmful.

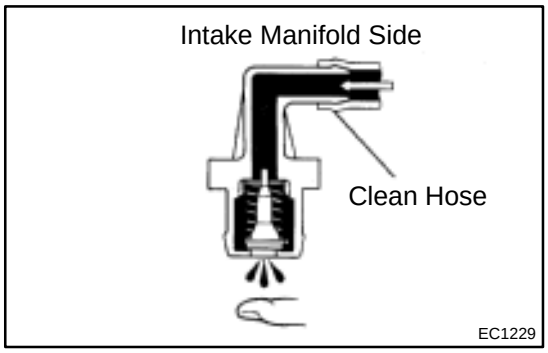

4. BLOW AIR FROM INTAKE MANIFOLD SIDE

Check that air passes through with difficulty.

If the PCV valve fails either of the checks, replace it.

5. REINSTALL PCV VALVE

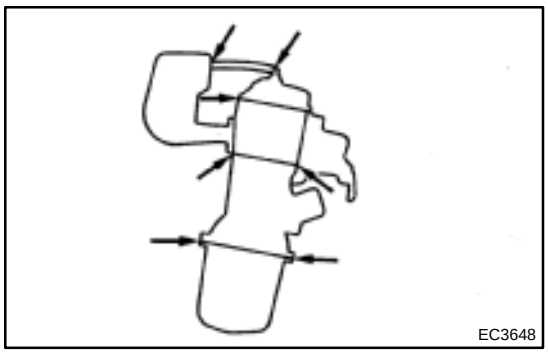

6. VISUALLY INSPECT HOSES, CONNECTIONS AND GASKETS

Check for cracks, leaks or damage.

EC07F–01

DRAWING

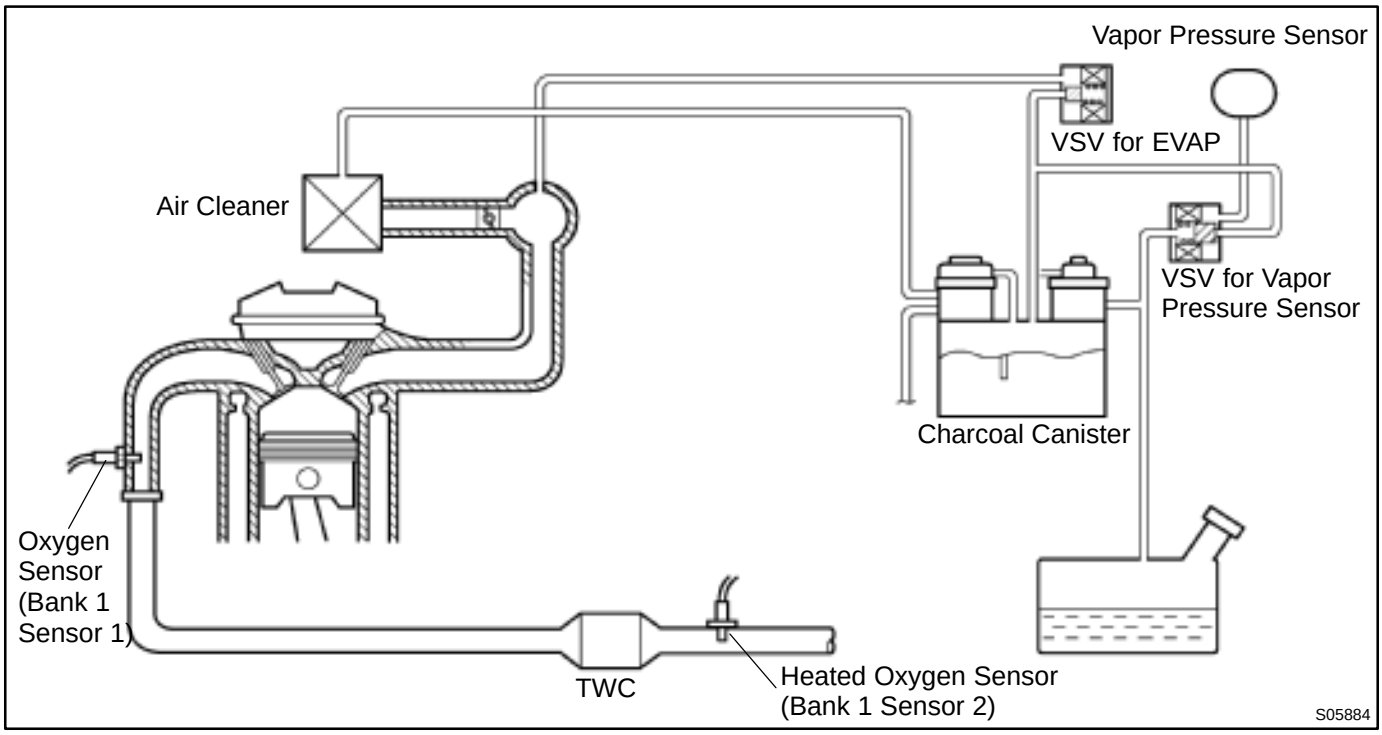

PARTS LAYOUT AND SCHEMATIC DRAWING

LOCATION

EC07E–04

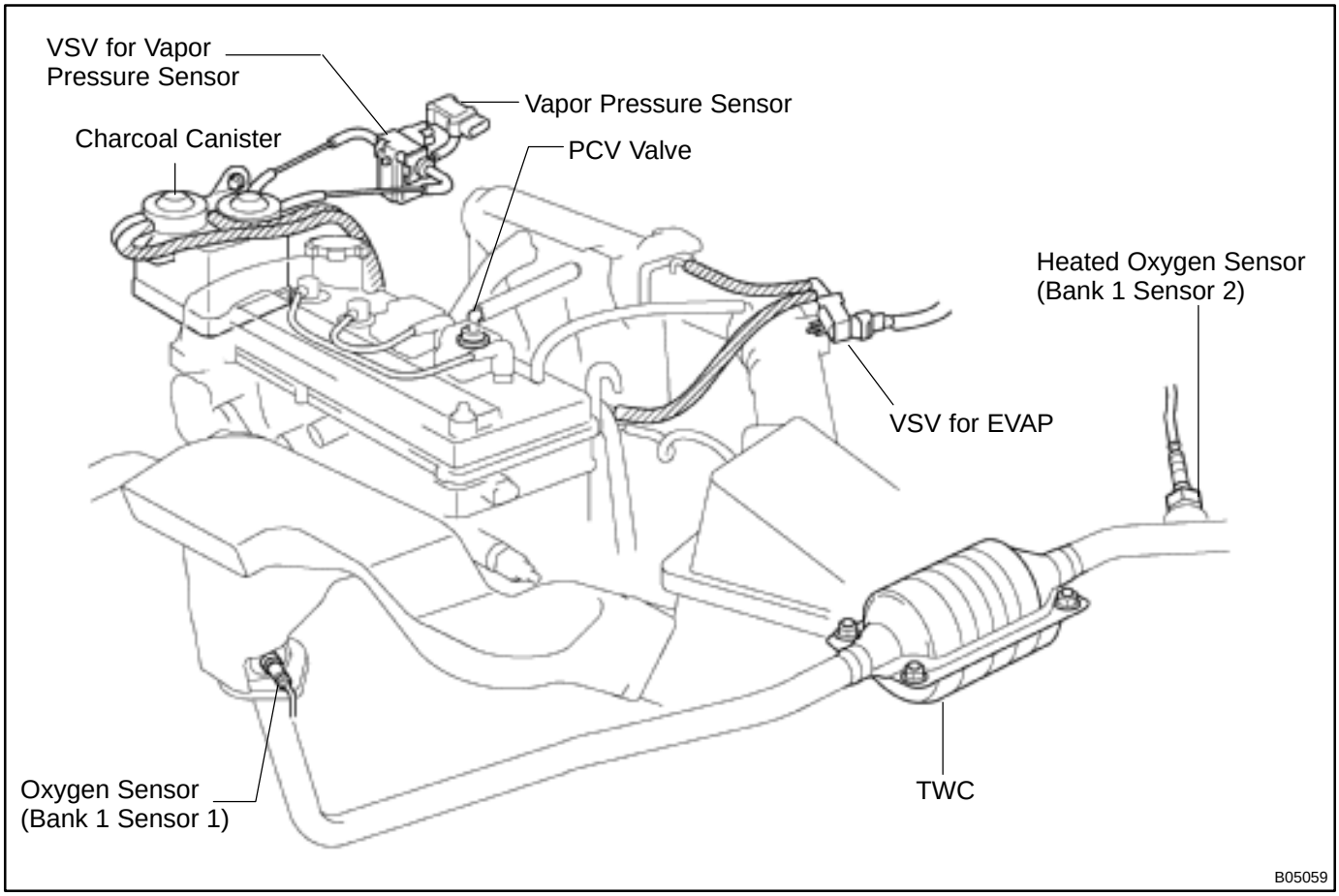

THREE–WAY CATALYTIC CONVERTER (TWC) SYSTEM

EC07B–03

INSPECTION

1. CHECK CONNECTION FOR LOOSENESS OR DAMAGE

2. CHECK CLAMPS FOR WEAKNESS, CRACKS OR DAMAGE

3. CHECK FOR DENTS OR DAMAGE

If any part of the protector is damaged or dented to the extent that it touches the TWC, repair or replace it.

4. CHECK HEAT INSULATOR FOR DAMAGE

5. CHECK FOR ADEQUATE CLEARANCE BETWEEN TWC AND HEAT INSULATOR

EC07C–02

REPLACEMENT

REMOVE FRONT EXHAUST PIPE (See page EM–89)

CO/HC

EM0KC–04

INSPECTION

HINT:

This check is used only to determine whether or not the idle CO/HC complies with regulations.

1. INITIAL CONDITIONS

(a) Engine coolant at normal operating temperature
(b) Air cleaner installed
(c) All pipes and hoses of air induction system connected
(d) All accessories switched OFF
(e) All vacuum lines properly connected
(f) SFI system wiring connectors fully plugged
(g) Ignition timing set correctly
(h) Transmission in neutral position
(i) CO/HC meter calibrated by hand

2. START ENGINE

3. RACE ENGINE AT 2,500 RPM FOR APPROX. 180 SECONDS

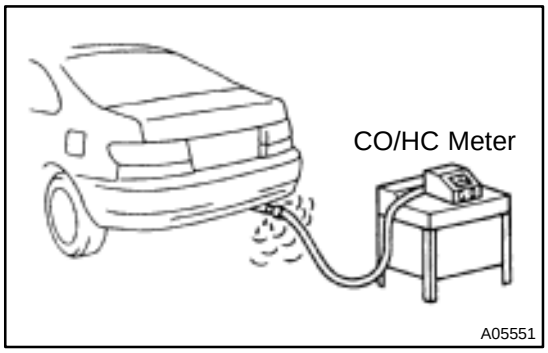

4. INSERT CO/HC METER TESTING PROBE AT LEAST 40 cm (1.3 ft) INTO TAILPIPE DURING IDLING

5. IMMEDIATELY CHECK CO/HC CONCENTRATION AT IDLE AND/OR 2,500 RPM

Complete the measuring within 3 minutes.

HINT:

When doing the 2 mode (2,500 rpm and idle) test, follow the measurement order prescribed by the applicable local regulations.

If the CO/HC concentration does not comply with regulations, troubleshoot in the order given below.

- Check heated oxygen sensor operation (See page DI–44).
- See the table below for possible causes, and then inspect and correct the applicable causes if necessary.

CO	HC	Problems	Causes
Normal	High	Rough idle	1. Faulty ignitions: • Incorrect timing • Fouled, shorted or improperly gapped plugs • Open or crossed high–tension cords 2. Incorrect valve clearance 3. Leaky intake and exhaust valves 4. Leaky cylinders
Low	High	Rough idle (Fluctuating HC reading)	1. Vacuum leaks: • PCV hoses • Intake manifold • Throttle body • IAC valve • Brake booster line 2. Lean mixture causing misfire
High	High	Rough idle (Black smoke from exhaust)	1. Restricted air filter 2. Faulty SFI systems: • Faulty pressure regulator • Defective ECT sensor • Defective IAT sensor • Faulty ECM • Faulty injectors • Faulty throttle position sensor • MAP sensor

COMPRESSION

EM0KB–05

INSPECTION

HINT:

If there is lack of power, excessive oil consumption or poor fuel economy, measure the compression pressure.

1. WARM UP AND STOP ENGINE

Allow the engine to warm up to normal operating temperature.

2. DISCONNECT IGNITION COIL CONNECTORS

3. DISCONNECT HIGH–TENSION CORDS FORM SPARK PLUGS

4. REMOVE SPARK PLUGS

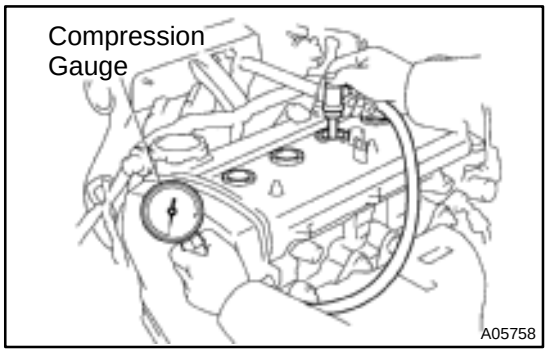

5. CHECK CYLINDER COMPRESSION PRESSURE

(a) Insert a compression gauge into the spark plug hole.

(b) Fully open the throttle.

(c) While cranking the engine, measure the compression pressure.

HINT:

Always use a fully charged battery to obtain engine revolutions of 250 rpm or more.

(d) Repeat steps (a) through (c) for each cylinder.

NOTICE:

This measurement must be done in as short a time as possible.

Compression pressure:
1,275 kPa (13.0 kgf/cm^2, 185 psi) or more
Minimum pressure:
981 kPa (10.0 kgf/cm^2, 142 psi)
Difference between each cylinder:
100 kPa (1.0 kgf/cm^2, 14 psi) or less

(e) If the cylinder compression in one or more cylinders is low, pour a small amount of engine oil into the cylinder through the spark plug hole and repeat steps (a) through (c) for cylinders with low compression.

- If adding oil helps the compression, chances are that the piston rings and/or cylinder bore are worn or damage.
- If pressure stays low, a valve may be sticking or seating is improper, or there may be leakage past the gasket.

6. **REINSTALL SPARK PLUGS**
7. **RECONNECT HIGH–TENSION CORDS TO SPARK PLUGS**
8. **RECONNECT IGNITION COIL CONNECTORS**

CYLINDER BLOCK

COMPONENTS

EM0JP–04

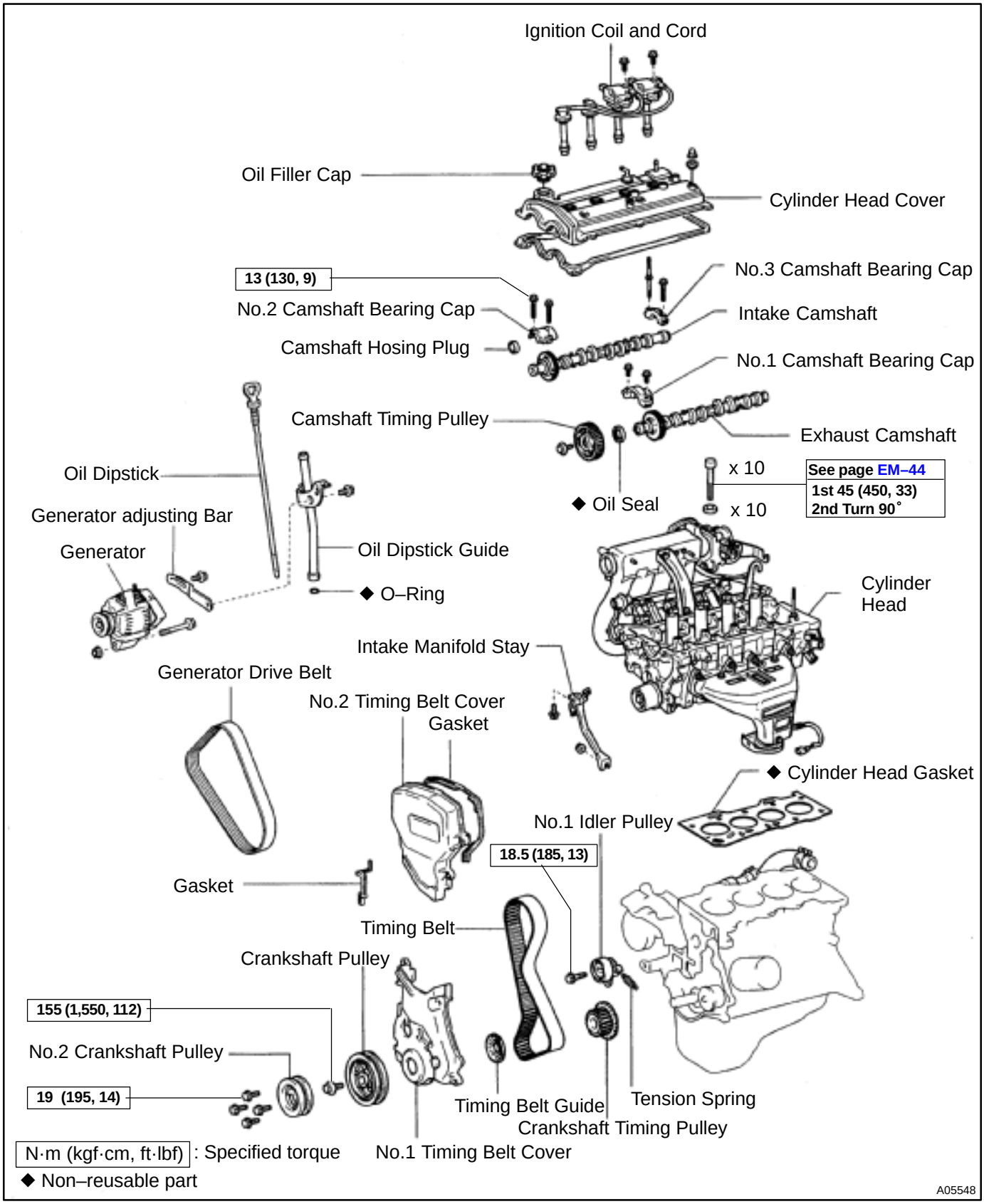

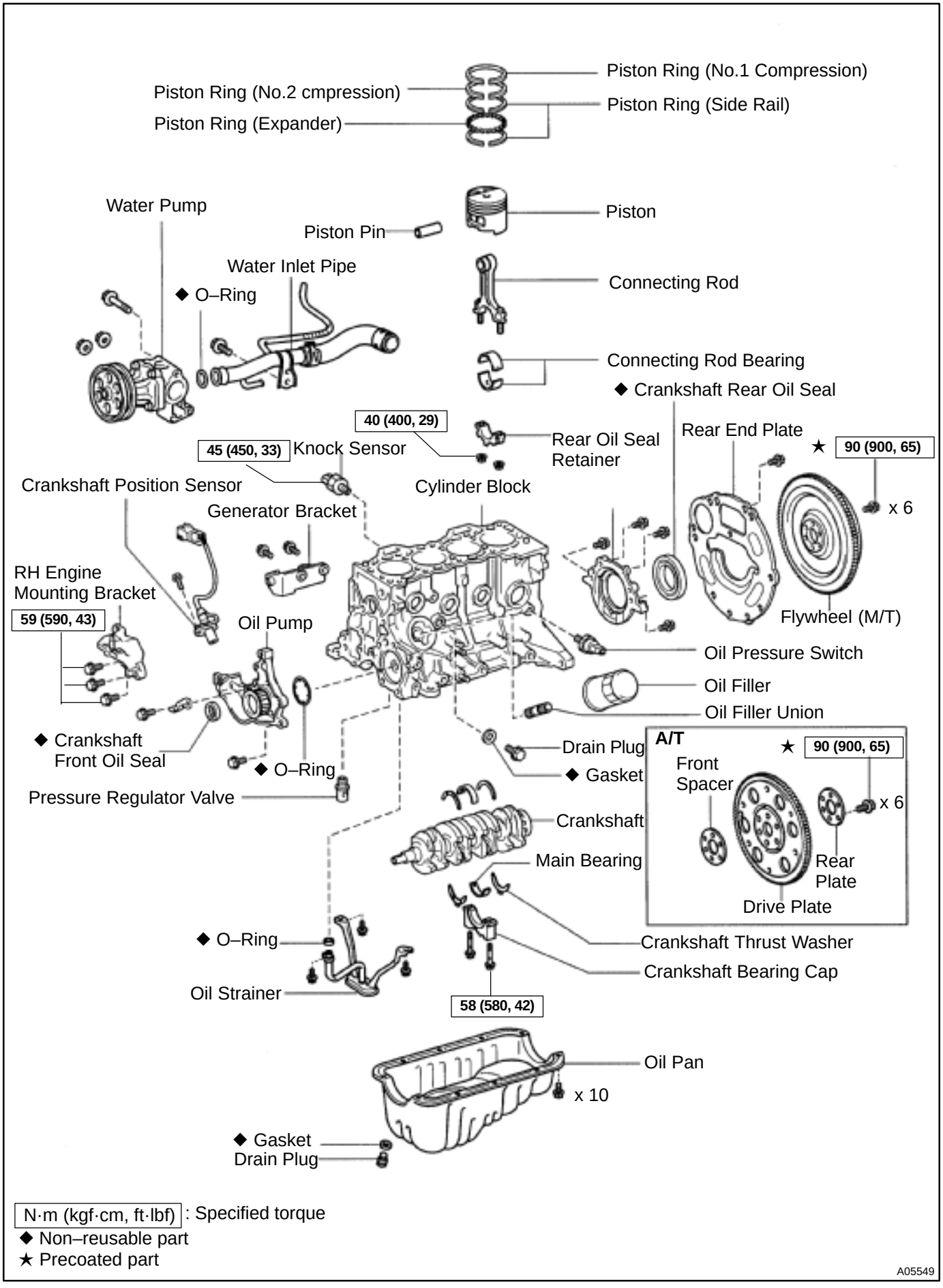

N·m (kgf·cm, ft·lbf) : Specified torque
◆ Non–reusable part
★ Precoated part

A05549

EM0JQ–05

DISASSEMBLY

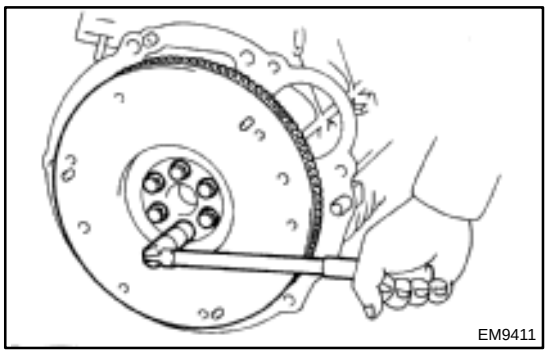

1. M/T:
REMOVE CLUTCH COVER AND DISC
2. REMOVE FLYWHEEL (M/T) OR DRIVE PLATE (A/T)

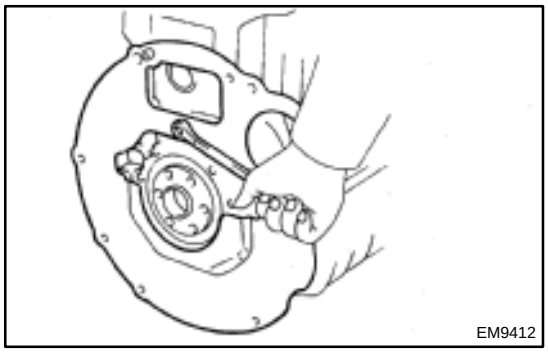

3. REMOVE REAR END PLATE
4. INSTALL ENGINE TO ENGINE STAND FOR DISASSEMBLY
5. REMOVE TIMING BELT AND PULLEYS
6. REMOVE CYLINDER HEAD
7. REMOVE OIL DIPSTICK GUIDE AND GENERATOR ADJUSTING BAR
8. REMOVE WATER PUMP WITH WATER INLET PIPE
9. REMOVE GENERATOR BRACKET

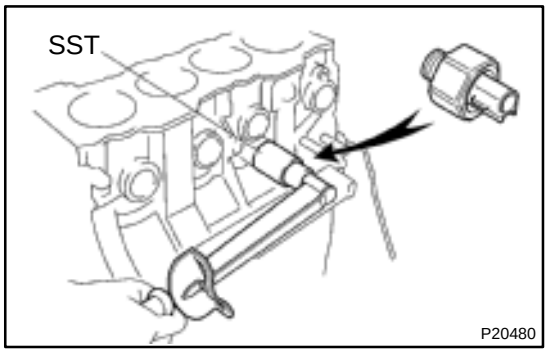

10. REMOVE KNOCK SENSOR
Using SST, remove the knock sensor.
SST 09816–30010
11. REMOVE RH ENGINE MOUNTING BRACKET
12. REMOVE OIL FILTER

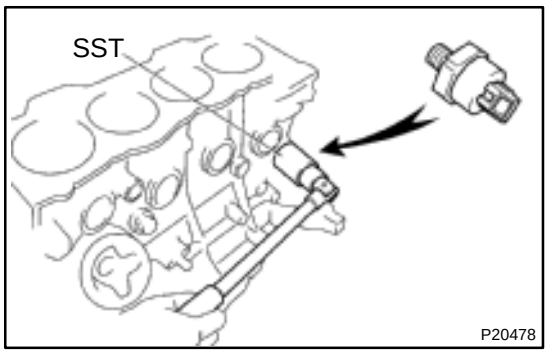

13. REMOVE OIL PRESSURE SWITCH
Using SST, remove the oil pressure switch.
SST 09816–30010
14. REMOVE OIL PUMP AND PRESSURE REGULATOR VALVE

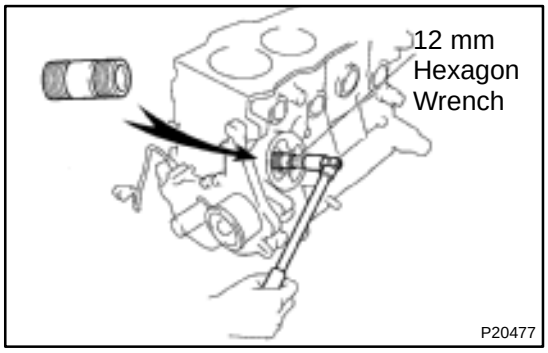

15. REMOVE OIL FILTER UNION
Using a 12 mm hexagon wrench, remove the oil filter union.

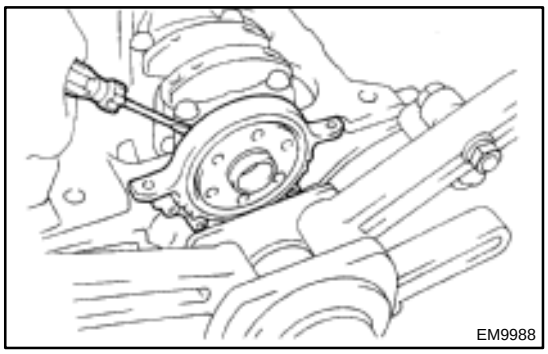
EM9988

16. REMOVE REAR OIL SEAL RETAINER

(a) Remove the 4 bolts.

(b) Using a screwdriver, remove the oil seal retainer by prying the portions between the oil seal retainer and main bearing cap.

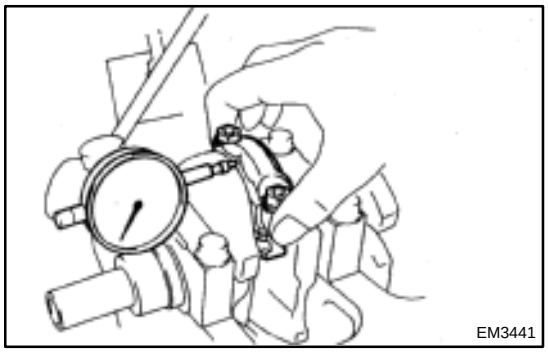
EM3441

17. CHECK CONNECTING ROD THRUST CLEARANCE

Using a dial indicator, measure the thrust clearance while moving the rod back and forth.

Standard thrust clearance:
0.15 – 0.35 mm (0.0059 – 0.0138 in.)
Maximum thrust clearance:
0.45 mm (0.0177 in.)

If the thrust clearance is greater than maximum, replace the connecting rod assembly. If necessary, replace the crankshaft.

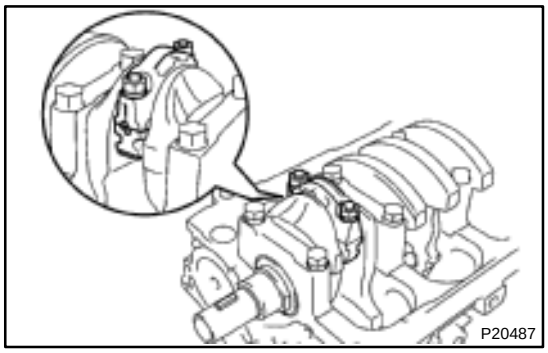
P20487

18. REMOVE CONNECTING ROD CAPS AND CHECK OIL CLEARANCE

(a) Check the matchmarks on the connecting rod and cap to ensure correct reassembly.

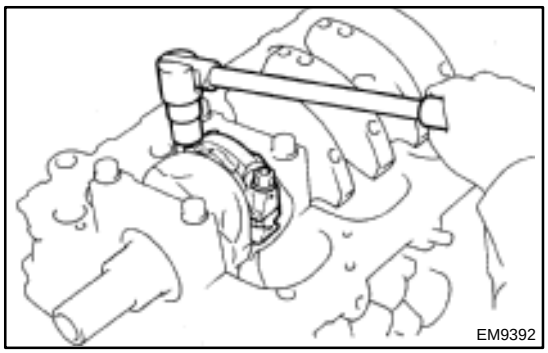
EM9392

(b) Remove the 2 connecting rod cap nuts.

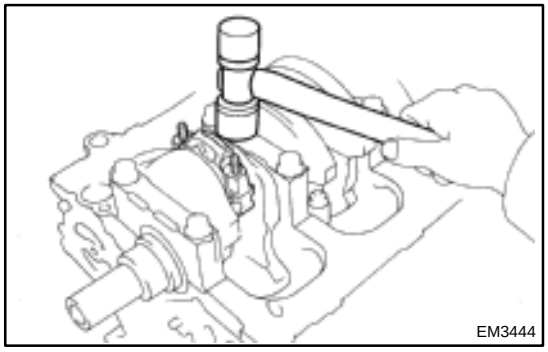
EM3444

(c) Using a soft–faced hammer, lightly tap the connecting rod bolt and lift the cap and lower bearing.

HINT:
Keep the lower bearing inserted with the connecting rod cap.

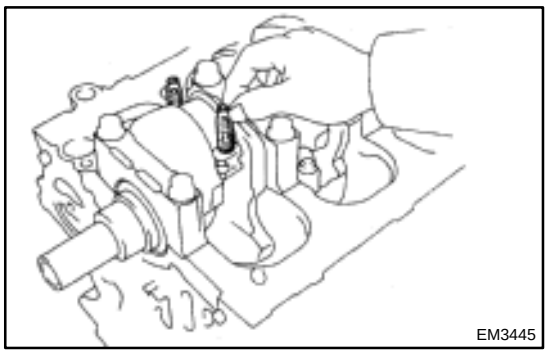
EM3445

(d) Cover the connecting rod bolts with a short piece of hose to protect the crankshaft from damage.

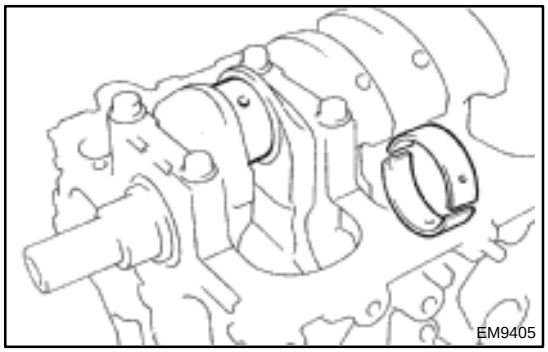
EM9405

(e) Clean the crank pin and bearing.
(f) Check the crank pin bearing is for pitting and scratches.
If the crank pin or bearing is damaged, replace the bearings. If necessary, grind or replace the crankshaft.

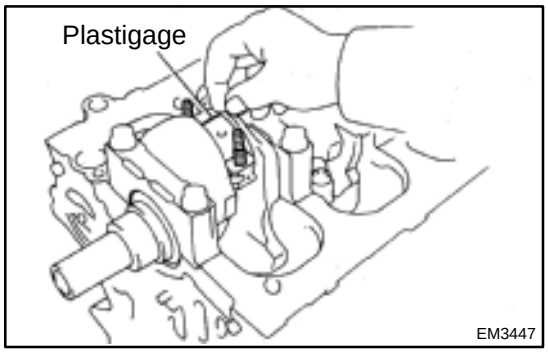

EM3447

(g) Lay a strip of Plastigage across the crank pin.

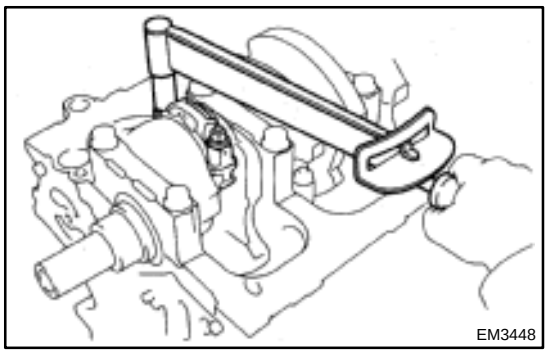
EM3448

(h) Install the connecting rod cap.
(See procedure (b) and (c) above)
Torque: 40 N·m (400 kgf·cm, 29 ft·lbf)

NOTICE:
Do not turn the crankshaft.

(i) Remove the connecting rod cap.
(See procedure (b) and (c) above)

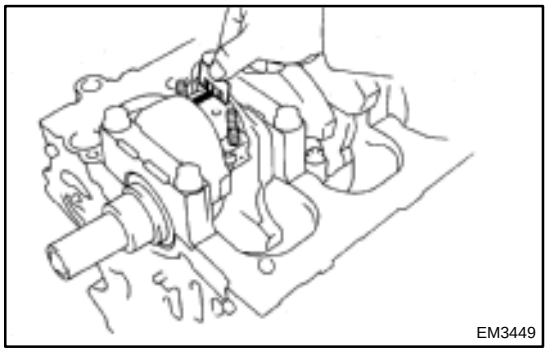
EM3449

(j) Measure the Plastigage at its widest point.
Standard oil clearance:

STD	0.016 – 0.048 mm (0.0006 – 0.0019 in.)
U/S 0.25	0.015 – 0.058 mm (0.0006 – 0.0023 in.)

Maximum oil clearance:
0.08 mm (0.0031 in.)

If the oil clearance is greater than maximum, replace the bearings. If necessary, grind or replace the crankshaft.

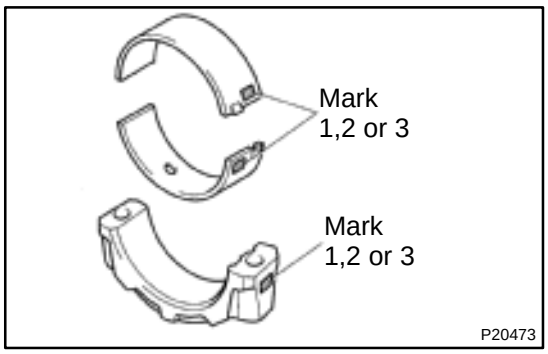

HINT:
If using a standard bearing, replace with one having the same number as marked on the bearing cap. There are 3 sizes of standard bearings, marked ”1”, ”2” and ”3” accordingly.

Reference:

Connecting rod big end inside diameter		
Standard sized	Mark 1	46.000 – 46.007 mm (1.8110 – 1.8113 in.)
	Mark 2	46.007 – 46.014 mm (1.8113 – 1.8116 in.)
	Mark 3	46.014 – 46.021 mm (1.8116 – 1.8118 in.)
U/S 0.25	–	46.000 – 46.021 mm (1.8110 – 1.8118 in.)
Crankshaft crank pin diameter		
Standard sized	–	42.985 – 43.000 mm (1.6923 – 1.6929 in.)
U/S 0.25	–	42.745 – 42.755 mm (1.6829 – 1.6833 in.)
Bearing center wall thickness		
Standard sized	Mark 1	1.487 – 1.491 mm (0.0585 – 0.0587 in.)
	Mark 2	1.491 – 1.495 mm (0.0587 – 0.0589 in.)
	Mark 3	1.495 – 1.499 mm (0.0589 – 0.0590 in.)
U/S 0.25	–	1.609 – 1.615 mm (0.0633 – 0.0636 in.)

(k) Completely remove the Plastigage.

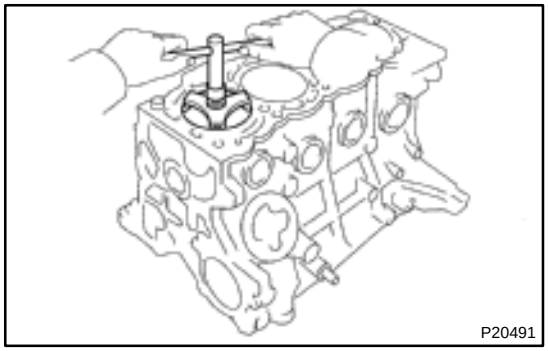

19. REMOVE PISTON AND CONNECTING ROD ASSEMBLIES

(a) Using a ridge reamer, remove all the carbon from the top of the cylinder.

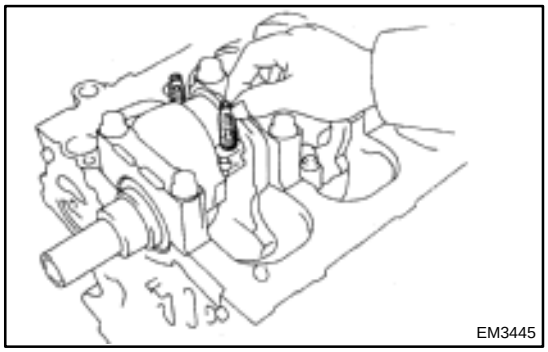

(b) Cover the rod bolts with a short piece of hose to protect the crankshaft from damage.

(c) Push out the piston and connecting rod assembly and the upper bearing though the top of the cylinder block.

HINT:

- Keep the bearing, connecting rod and cap together.
- Arrange the piston and connecting rod assemblies in correct order.

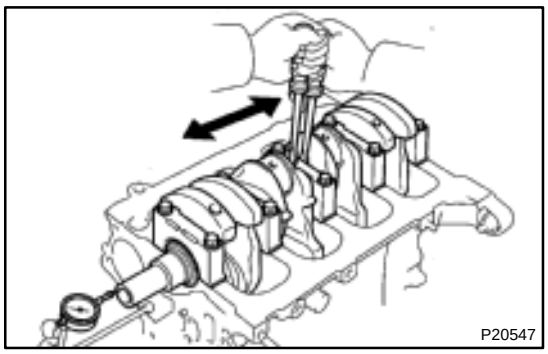

20. CHECK CRANKSHAFT THRUST CLEARANCE

Using a dial indicator, measure the thrust clearance while prying the crankshaft back and forth with a screwdriver.

Standard thrust clearance:
0.02 – 0.20 mm (0.0008 – 0.0079 in.)
Maximum thrust clearance:
0.3 mm (0.012 in.)

If the thrust clearance is greater than maximum, replace the thrust washers as a set.

Thrust washer thickness:

STD	2.430 – 2.480 mm (0.0957 – 0.0976 in.)
O/S 0.125	2.493 – 2.543 mm (0.0981 – 0.1001 in.)

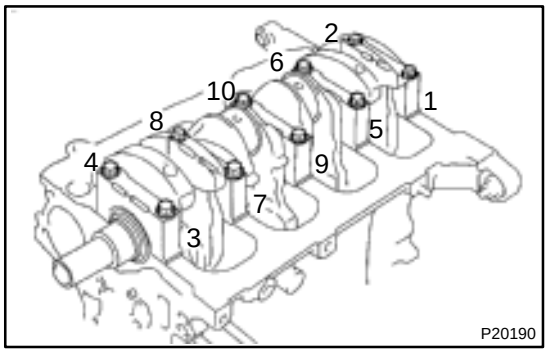

21. REMOVE MAIN BEARING CAPS AND CHECK OIL CLEARANCE

(a) Uniformly loosen and remove the 10 main bearing cap bolts, in several passes, in the sequence shown.

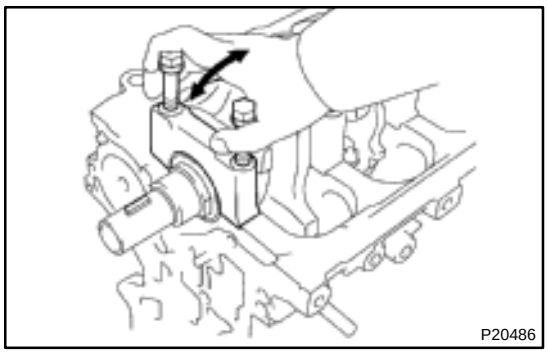

(b) Using the removed main bearing cap bolts, pry the main bearing cap back and forth, and remove the 5 main bearing caps, 5 lower bearings and 2 lower thrust washers (No.3 main bearing cap only).

HINT:

- Keep the lower bearing inserted together with cap.
- Arrange the main bearing caps and lower thrust washers in correct order.

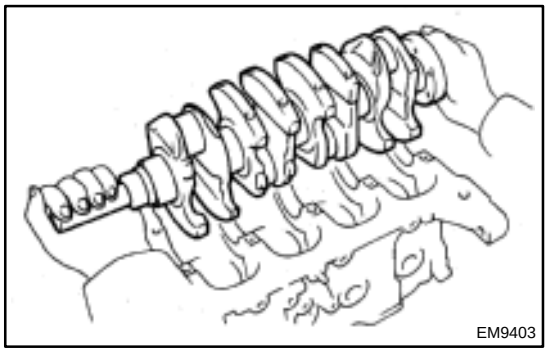

(c) Lift out the crankshaft.

HINT:

Keep the upper bearings and upper thrust washers together with the cylinder block.

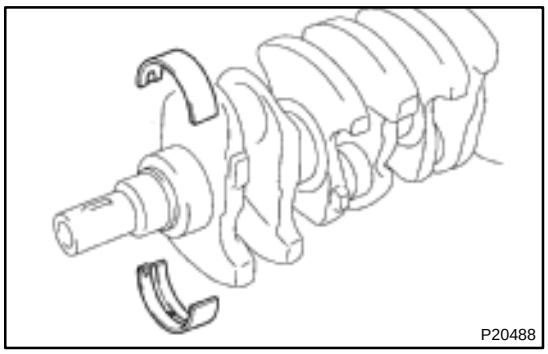

(d) Clean each main journal and bearing.
(e) Check each main journal and bearing for pitting and scratches.

If the journal or bearing is damaged, replace the bearing.
If necessary, grind or replace the crankshaft.

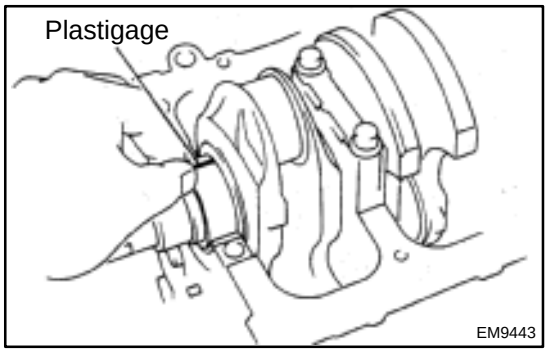

(f) Place the crankshaft on the cylinder block.
(g) Lay a strip of Plastigage across each journal.

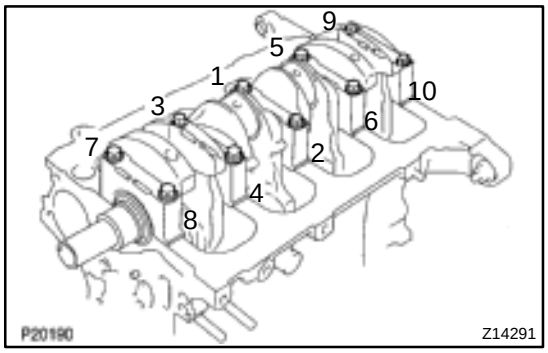

(h) Install the main bearing caps.
(See step 7 on page EM–83)
Torque: 58 N·m (580 kgf·cm, 42 ft·lbf)

NOTICE:
Do not turn the crankshaft.

(i) Remove the main bearing caps.
(See procedure (a) and (b) above)

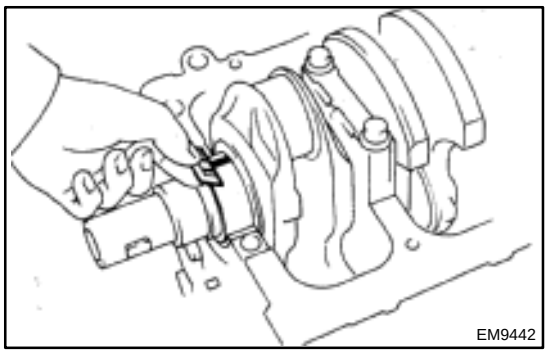

(j) Measure the Plastigage at its widest point.
Standard oil clearance:

STD	0.016 – 0.035 mm (0.0006 – 0.0014 in.)
U/S 0.25	0.015 – 0.055 mm (0.0006 – 0.0022 in.)

Maximum oil clearance:
0.08 mm (0.0031 in.)

HINT:

- If replacing the cylinder block subassembly, the bearing standard clearance will be: 0.018–0.045 mm (0.0007–0.0018 in.)
  If the oil clearance is greater than maximum replace the bearings. If necessary, grind or replace the crankshaft.

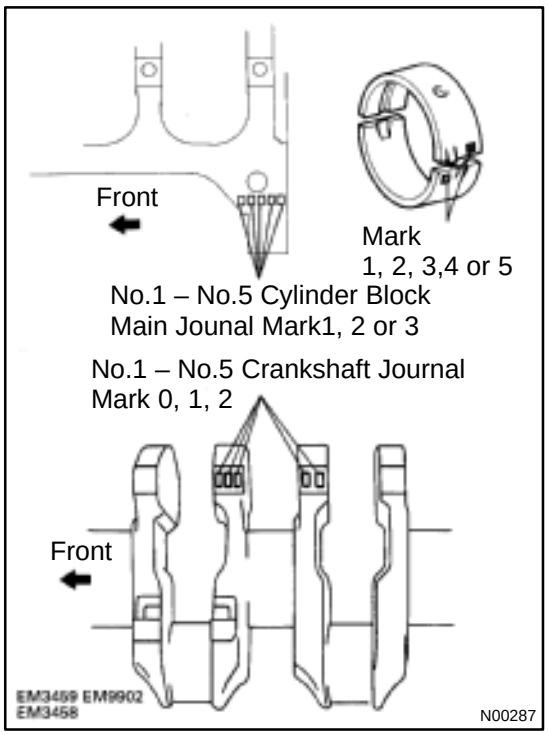

- If using a standard bearing, replace it with one having the same number. If the number of the bearing cannot be determined, select the correct bearing by adding together the numbers imprinted on the cylinder block and crankshaft, then selecting the bearing with the same number as the total. There are 5 sizes of standard bearings, marked ”1”, ”2”, ”3”, ”4” and ”5” accordingly.

	Number marked								
Cylinder block	1			2			3		
Crankshaft	0	1	2	0	1	2	0	1	2
Use bearing	1	2	3	2	3	4	3	4	5

EXAMPLE: Cylinder block ”2” + Crankshaft ”1”
= Total number 3 (Use bearing ”3”)

Reference:

Cylinder block main journal bore diameter		
Standard sized	Mark 1	54.018 – 54.024 mm (2.1267 – 2.1269 in.)
	Mark 2	54.025 – 54.030 mm (2.1270 – 2.1272 in.)
	Mark 3	54.031 – 54.036 mm (2.1272 – 2.1274 in.)
U/S 0.25	–	54.018 – 54.036 mm (2.1267 – 2.1274 in.)
Crankshaft journal diameter		
Standard sized	Mark 0	49.996 – 50.000 mm (1.9683 – 1.9685 in.)
	Mark 1	49.991 – 49.995 mm (1.9681 – 1.9683 in.)
	Mark 2	49.985 – 49.990 mm (1.9679 – 1.9681 in.)
U/S 0.25	–	49.745 – 49.755 mm (1.9585 – 1.9589 in.)
Bearing center wall thickness		
Standard sized	Mark 1	1.997 – 2.000 mm (0.0786 – 0.0787 in.)
	Mark 2	2.001 – 2.003 mm (0.0788 – 0.0789 in.)
	Mark 3	2.004 – 2.006 mm (0.0789 – 0.0790 in.)
	Mark 4	2.007 – 2.009 mm (0.0790 – 0.0791 in.)
	Mark 5	2.010 – 2.012 mm (0.0791 – 0.0792 in.)
U/S 0.25	–	2.118 – 2.124 mm (0.0834 – 0.0836 in.)

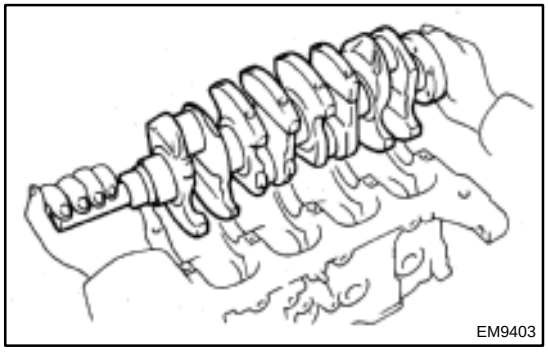

(k) Completely remove the Plastigage.

22. REMOVE CRANKSHAFT

(a) Lift out the crankshaft.

(b) Remove the upper main bearings and upper thrust washers from the cylinder block.

HINT:
Arrange the main bearings and thrust washers in correct order.



23. CHECK FIT BETWEEN PISTON AND PIN

Try to move the piston back and forth on the piston pin.
If any movement is felt, replace the piston and pin as a set.

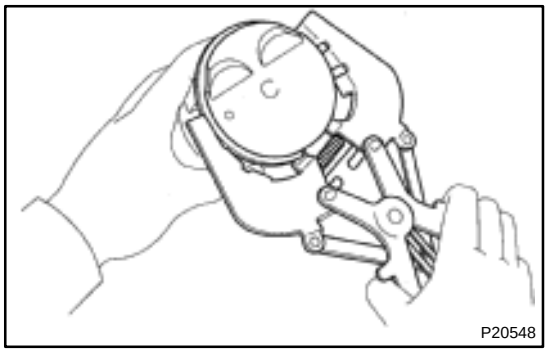

24. REMOVE PISTON RINGS

(a) Using a piston ring expander, remove the compression rings.
(b) Remove the 2 side rails and oil ring expander by hand.

HINT:
Arrange the rings in the correct order only.

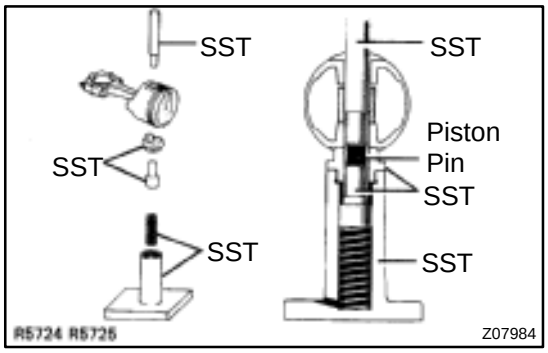

25. DISCONNECT CONNECTING ROD FROM PISTON

Using SST, press out the piston pin from the piston.
Remove the connecting rod.

SST 09221–25024 (09221–00020, 09221–00030, 09221–00130, 09221–00140, 09221–00150)

HINT:

- The piston and pin are a matched set.
- Arrange the pistons, pins, rings, connecting rods and bearings in correct order.

EM0JR–02

INSPECTION

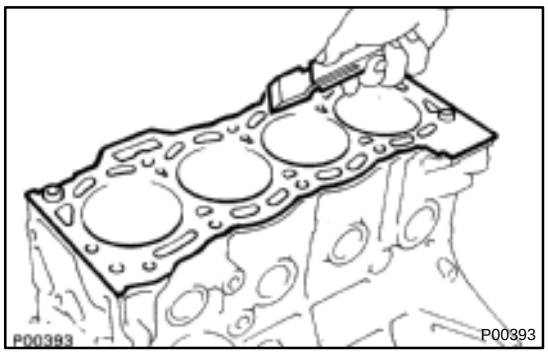

1. CLEAN CYLINDER BLOCK

(a) Remove gasket material.
Using a gasket scraper, remove all the gasket material from the top surface of the cylinder block.

(b) Clean cylinder block.
Using a soft brush and solvent, thoroughly clean the cylinder block.

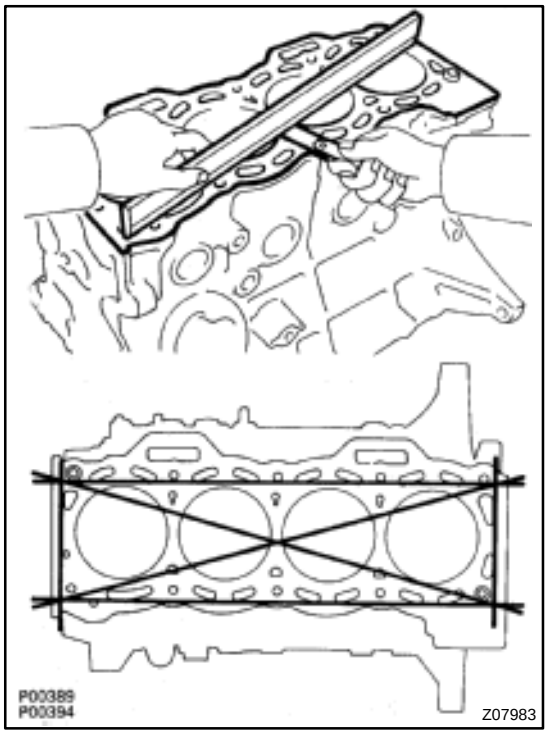

2. INSPECT TOP SURFACE OF CYLINDER BLOCK FOR FLATNESS

Using a precision straight edge and feeler gauge, measure the surfaces contacting the cylinder head gasket for warpage.

Maximum warpage: 0.05 mm (0.0020 in.)

If warpage is greater than maximum, replace the cylinder block.

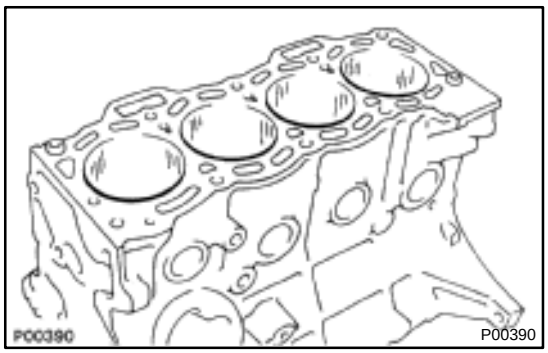

3. INSPECT CYLINDER FOR VERTICAL SCRATCHES

Visually check the cylinder for vertical scratches.
If deep scratches are present, replace the cylinder block.

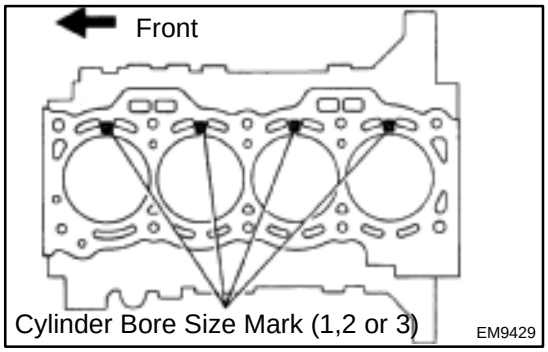

4. INSPECT CYLINDER BORE DIAMETER

HINT:
There are 3 sizes of the standard cylinder bore diameter, marked ”1”, ”2” and ”3” accordingly. The mark is stamped on the top of the cylinder block.

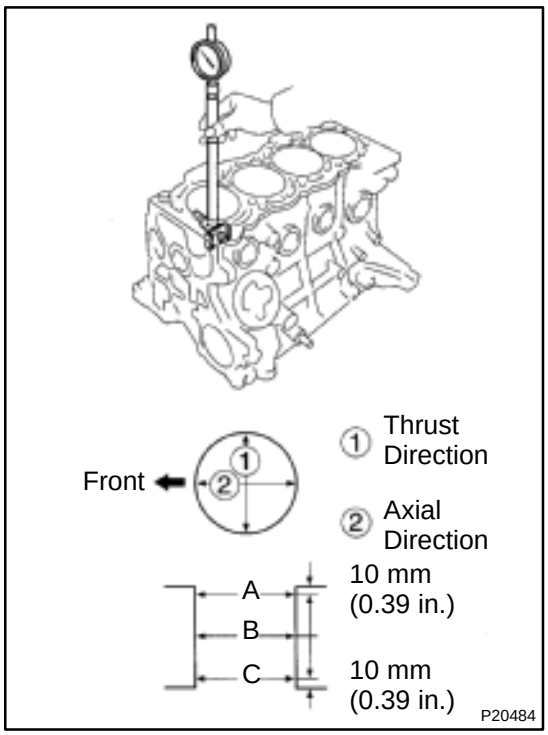

Using a cylinder gauge, measure the cylinder bore diameter at positions A, B and C in the thrust and axial directions.

Standard diameter:

Mark "1"	74.000 – 74.010 mm (2.9134 – 2.9138 in.)
Mark "2"	74.011 – 74.020 mm (2.9138 – 2.9142 in.)
Mark "3"	74.021 – 74.030 mm (2.9142 – 2.9146 in.)

Maximum diameter: 74.23 mm (2.9224 in.)

If the diameter is greater than maximum, replace the cylinder block.

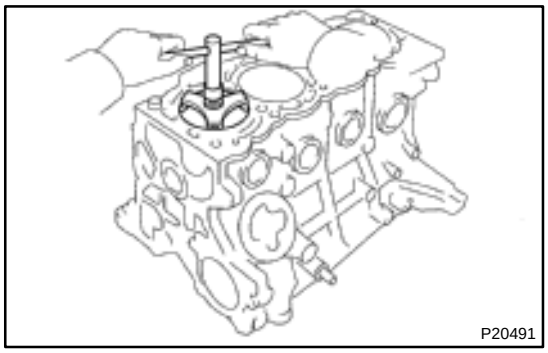

5. REMOVE CYLINDER RIDGE

If the wear is less than 0.2 mm (0.008 in.), using a ridge reamer, grind the top of the cylinder.

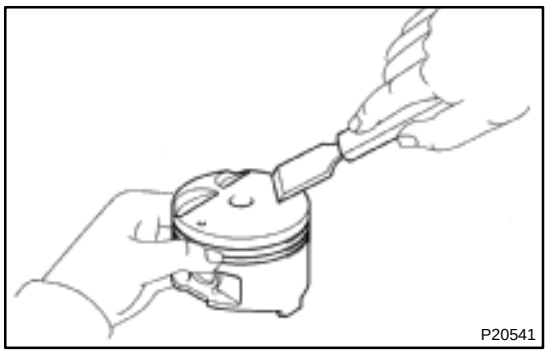

6. CLEAN PISTON

(a) Using a gasket scraper, remove the carbon from the piston top.

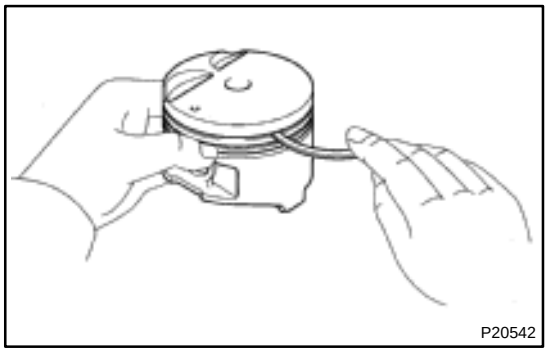

(b) Using a groove cleaning tool or broken ring, clean the ring grooves.

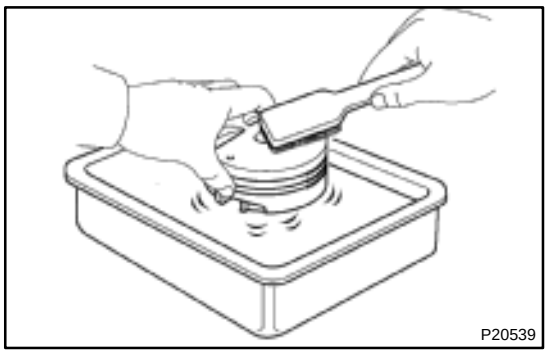

(c) Using a soft brush and solvent, thoroughly clean the piston.

NOTICE:
Do not damage the piston.

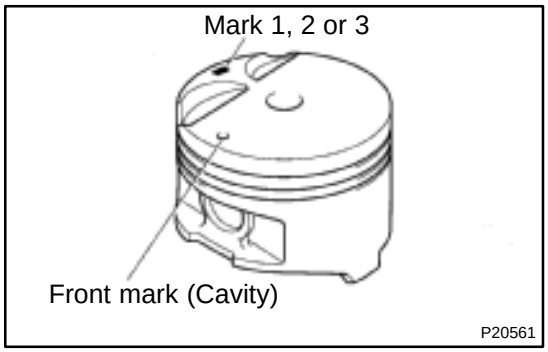

7. INSPECT PISTON OIL CLEARANCE

HINT:
There are 3 sizes of the standard piston diameter, marked ”1”, ”2” and ”3” accordingly. The mark is stamped on the piston top.

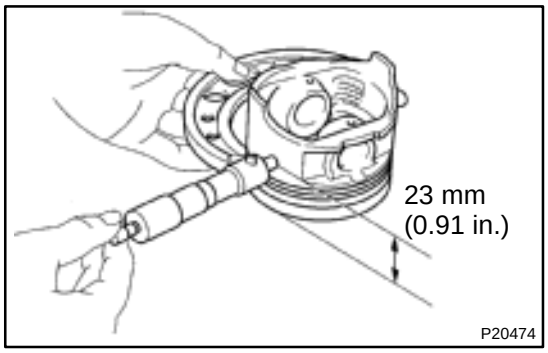

(a) Using a micrometer, measure the piston diameter at right angles to the piston pin center line, 23 mm (0.91 in.) from the piston head.

Piston diameter:

Mark ”1”	73.900 – 73.910 mm (2.9094 – 2.9098 in.)
Mark ”2”	73.910 – 73.920 mm (2.9098 – 2.9120 in.)
Mark ”3”	73.920 – 73.930 mm (2.9120 – 2.9106 in)

(b) Measure the cylinder bore diameter in the thrust directions. (See step 4)

(c) Subtract the piston diameter measurement from the cylinder bore diameter measurement.

Standard oil clearance:
0.09 – 0.11 mm (0.0035 – 0.0043 in.)
Maximum oil clearance:
0.13 mm (0.0051 in.)

If the oil clearance is greater than maximum, replace all 4 pistons. If necessary, replace the cylinder block.

HINT:
Use new cylinder block:
Use a piston with the same number mark as the cylinder bore diameter marked on the cylinder block.

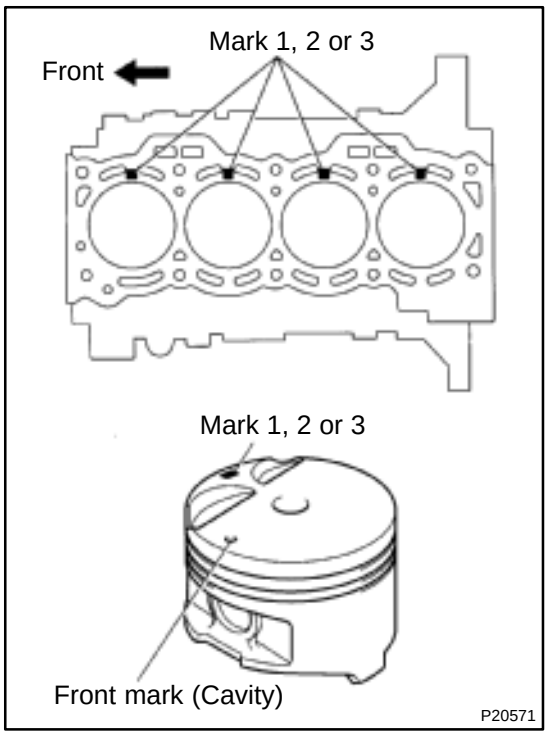

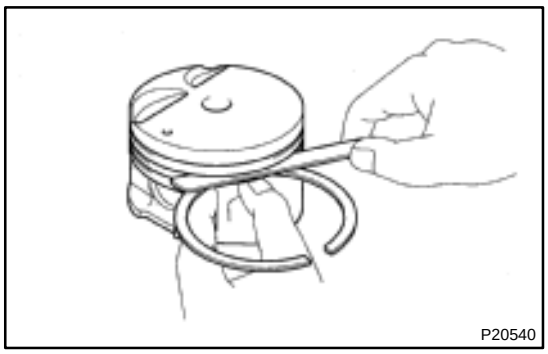

8. INSPECT PISTON RING GROOVE CLEARANCE

Using a feeler gauge, measure the clearance between new piston ring and the wall of the ring groove.

Ring groove clearance:

No.1	0.04 – 0.08 mm (0.0016 – 0.0031 in.)
No.2	0.03 – 0.07 mm (0.0012 – 0.0028 in.)

If the oil clearance is greater than maximum, replace the piston.

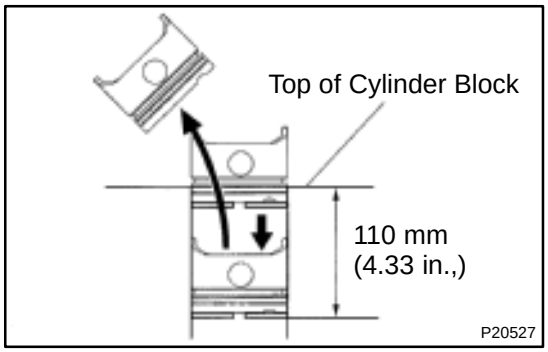

9. INSPECT PISTON RING END GAP

(a) Insert the piston ring into the cylinder bore.

(b) Using a piston, push the piston ring a little beyond the bottom of the ring travel, 110 mm (4.33 in.) from the top of the cylinder block.

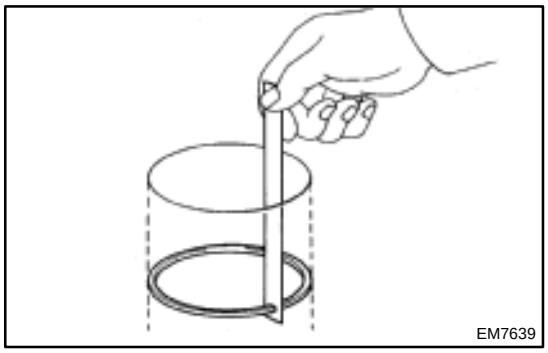

(c) Using a feeler gauge, measure the end gap.

Standard end gap:

No.1	0.26 – 0.48 mm (0.0102 – 0.0189 in.)
No.2	0.36 – 0.57 mm (0.0142 – 0.0224 in.)
Oil (Side rail)	0.13 – 0.50 mm (0.0051 – 0.0197 in.)

Maximum end gap:

No.1	1.07 mm (0.0421 in.)
No.2	1.02 mm (0.0402 in.)
Oil (Side rail)	1.10 mm (0.0433 in.)

If the end gap is greater than maximum, replace the piston ring. If necessary, replace the cylinder block.

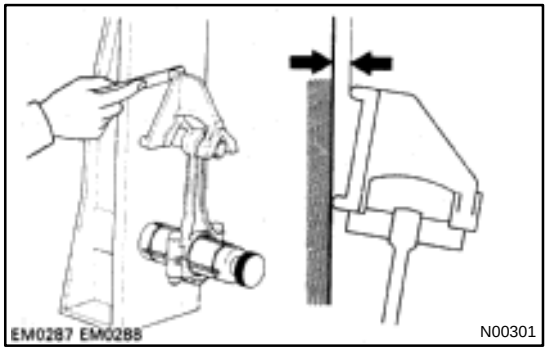

10. INSPECT CONNECTING RODS

Using a rod aligner, check the connecting rod alignment.

- Check for out–of–alignment.

Maximum out–of–alignment:

0.03 mm (0.0012 in.) per 100 mm (3.94 in.)

If out–of–alignment is greater than maximum, replace the connecting rod assembly.

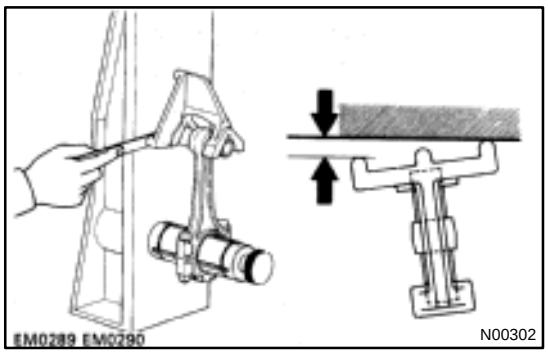

- Check for twist

Maximum twist:

0.05 mm (0.0020 in.) per 100 mm (3.94 in.)

If twist is greater than maximum, replace the connecting rod assembly.

HINT:

If replacing the connection rods, replace the same number of connecting rod bearings as that of new connecting rod caps.

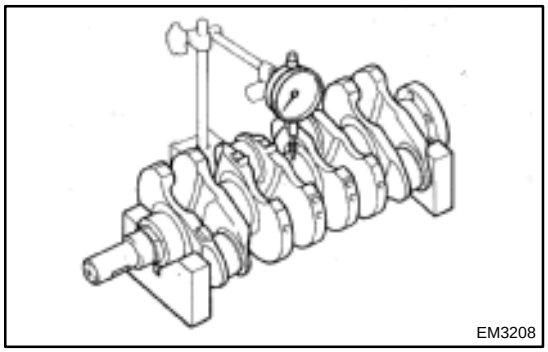

11. INSPECT CRANKSHAFT FOR RUNOUT

(a) Place the crankshaft on V–blocks.

(b) Using a dial indicator, measure the circle runout at the center journal.

Maximum circle runout: 0.06 mm (0.0024 in.)

If the circle runout is greater than maximum, replace the crankshaft.

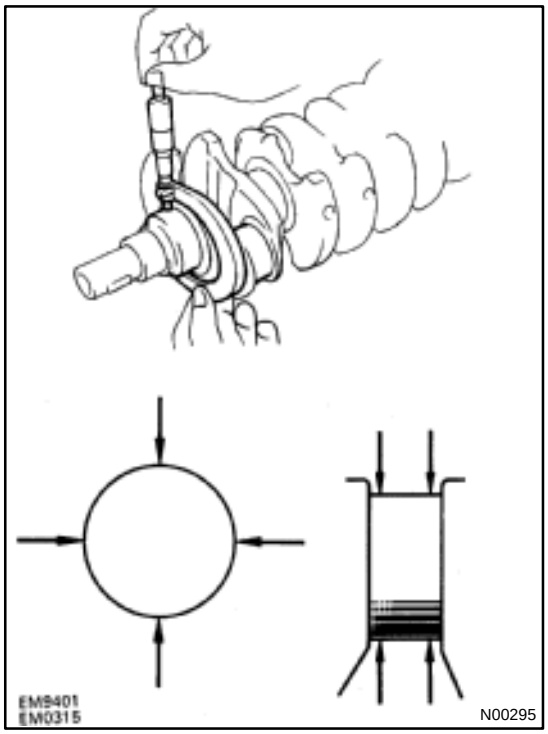

12. INSPECT MAIN JOURNALS AND CRANK PINS

(a) Using a micrometer, measure the diameter of each main journal and crank pin.

Main journal diameter:

STD	49.985 – 50.000 mm (1.9679 – 1.9685 in.)
U/S 0.25	49.745 – 49.755 mm (1.9585 – 1.9589 in.)

Crank pin diameter:

STD	42.985 – 43.000 mm (1.6923 – 1.6929 in.)
U/S 0.25	42.745 – 42.755 mm (1.6829 – 1.6833 in.)

If the diameter is not as specified, check the oil clearance (See steps 3 and 6 in cylinder block disassembly). If necessary, grind or replace the crankshaft.

(b) Check each main journal and crank pin for taper and out–of–round as shown.

Maximum taper:

0.08 mm (0.0031 in.)

Maximum out–of–round:

0.07 mm (0.0028 in.)

If the taper and out–of–round is greater than maximum, replace the crankshaft.

13. IF NECESSARY, GRIND AND HONE MAIN JOURNALS AND/OR CRANK PINS

- Grind and hone the main journals and/or crank pins to the finished undersized diameter (See procedure in step 2).
- Install new main journal and/or crank pin undersized bearings.

EM0JT–04

REASSEMBLY

HINT:

- Thoroughly clean all parts to be assembled.
- Before installing the parts, apply new engine oil to all sliding and rotating surfaces.
- Replace all gaskets, O–rings and oil seals with new parts.

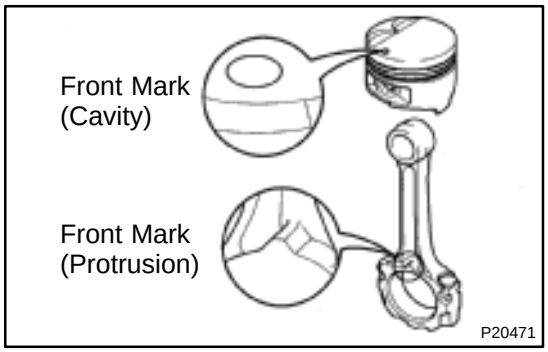

1. ASSEMBLE PISTON AND CONNECTING ROD

(a) Coat the piston pin and pin holes of the piston with engine oil.

(b) Align the cavity on the piston with the protrusion on the connecting rod.

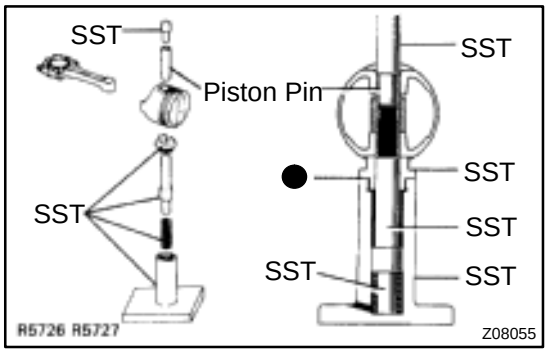

(c) Using SST, press in the piston pin.
SST 09221–25026 (09221–00020, 09221–00030, 09221–00130, 09221–00140, 09221–00150)

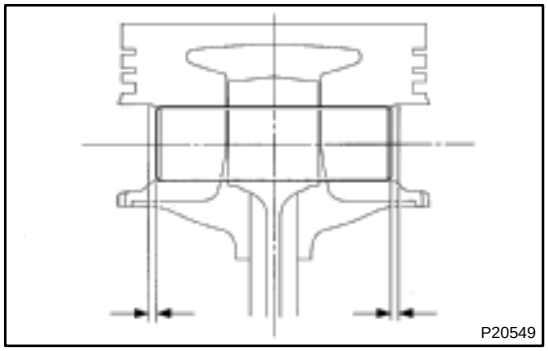

(d) After installing the piston pin, check that when the connecting rod is aligned with the center of the piston the space between the piston and each end of the piston pin are equal on the left and right sides.

HINT:

If the piston pin is off–center due to insufficient insertion pressure on the piston pin, place a washer at the position indicated by ● in the illustration for (c). Then, while checking that the space is equal at the ends of the piston pin on the left and right sides, press in the washer.

2. INSTALL PISTON RINGS

(a) Install the oil ring expander and 2 side rails by hand.

(b) Using a piston ring expander, install the 2 compression rings with the code mark facing upward.

Code Mark:

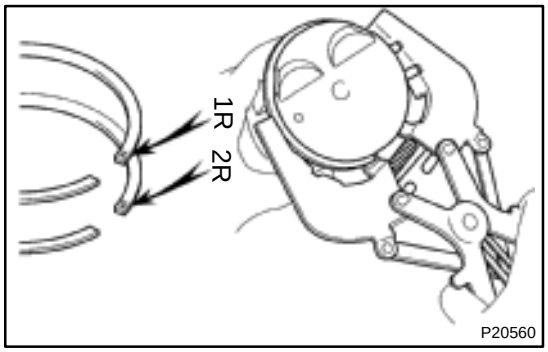

No.1	1R
No.2	2R

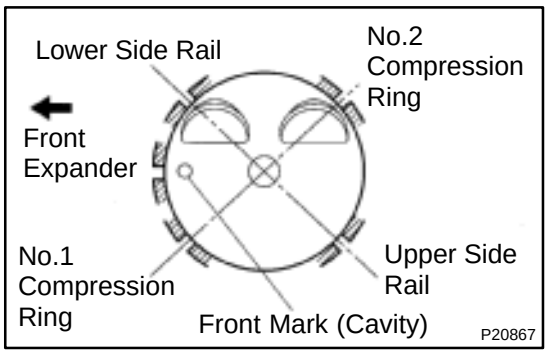

(c) Position the piston rings so that the ring ends are as shown.

NOTICE:

Do not align the end gaps.

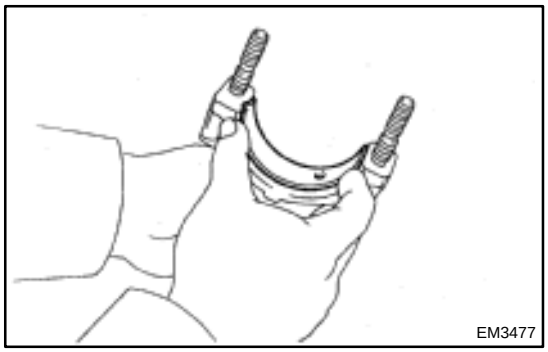

3. INSTALL BEARINGS

(a) Align the bearing claw with the groove of the connecting rod or connecting cap.

(b) Install the bearings in the connecting rod and connecting rod cap.

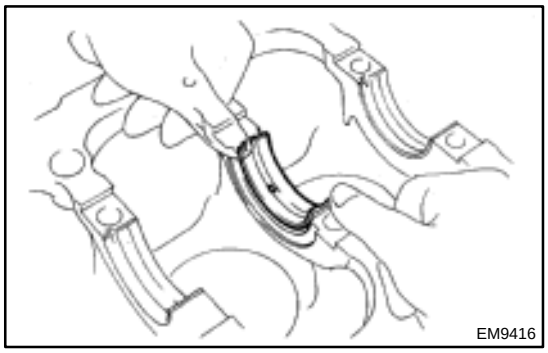

4. INSTALL MAIN BEARINGS

(a) Align the bearing claw with the claw groove of the cylinder block, and push in the 5 upper bearings.

NOTICE:

Install the bearing with the oil hole in the cylinder block.

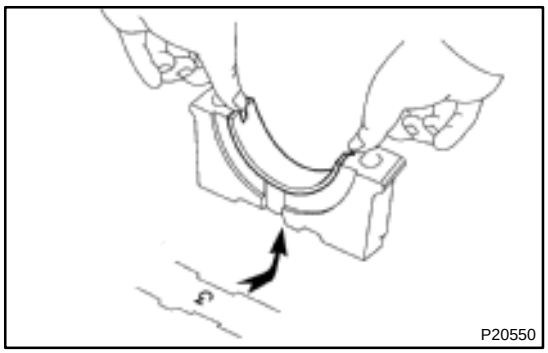

(b) Align the bearing claw with the claw groove of the main bearing cap, and push in the 5 lower bearings.

HINT:

A number is marked on each main bearing cap to indicate the illustration position.

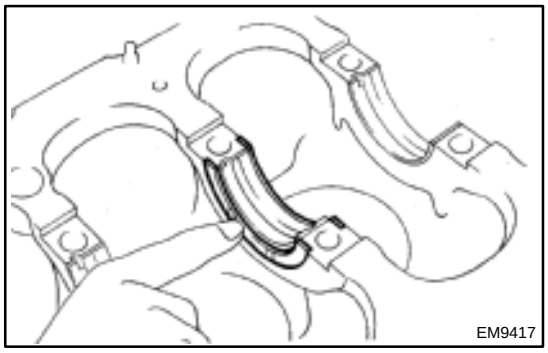

5. INSTALL UPPER THRUST WASHERS

Install the 2 thrust washers under the No.3 journal position with the oil grooves facing outward.

6. PLACE CRANKSHAFT ON CYLINDER BLOCK

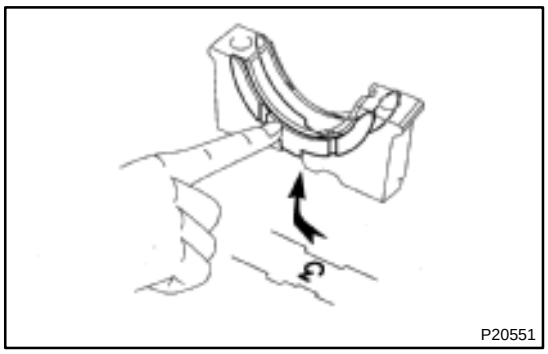

7. INSTALL MAIN BEARING CAPS AND LOWER THRUST WASHERS

(a) Install the 2 thrust washers on the No.3 bearing cap with the oil grooves facing outward.

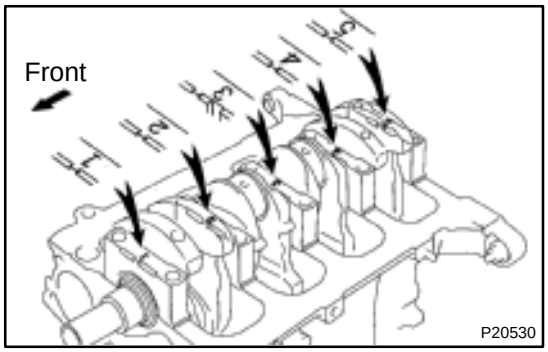

(b) Install the 5 main bearing caps in their proper locations.

HINT:

Each bearing cap has a number and front mark.

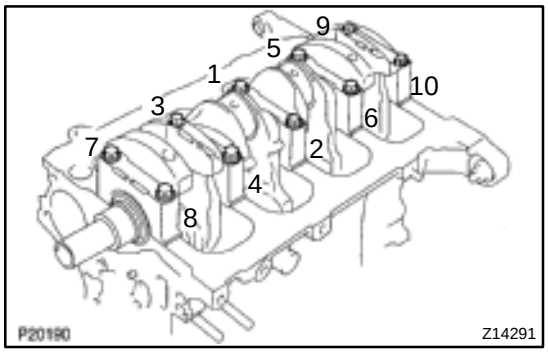

(c) Apply a light coat of engine oil on the threads and under the heads of the main bearing caps.

(d) Install and uniformly tighten the 10 bolts of the main bearing caps, in several passes, in the sequence shown.

Torque: 58 N·m (580 kgf·cm, 42 ft·lbf)

(e) Check that the crankshaft turns smoothly.

(f) Check the crankshaft thrust clearance (See page EM–68).

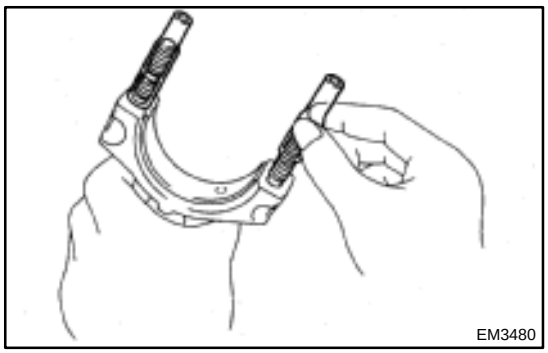

8. INSTALL PISTON AND CONNECTING ROD ASSEMBLIES

(a) Cover the connecting rod bolts with a short piece of hose to protect the crankshaft from damage.

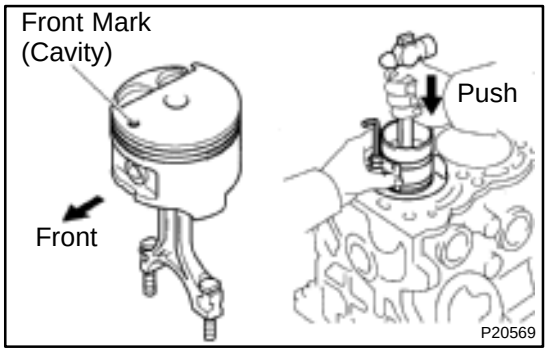

(b) Using a piston ring compressor, push the correctly numbered piston and connecting rod assemblies into each cylinder with the front mark of the piston facing forward.

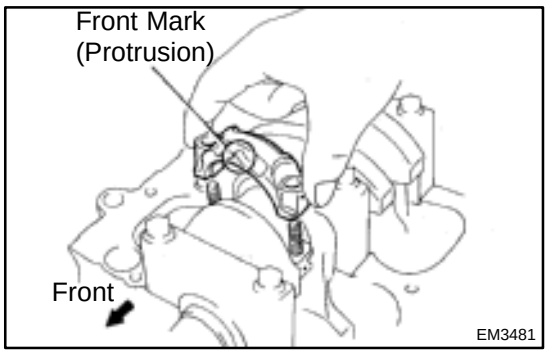

9. INSTALL CONNECTING ROD CAPS

(a) Match the numbered connecting rod cap with the numbered connecting rod.

(b) Install the connecting rod cap with the front mark facing forward.

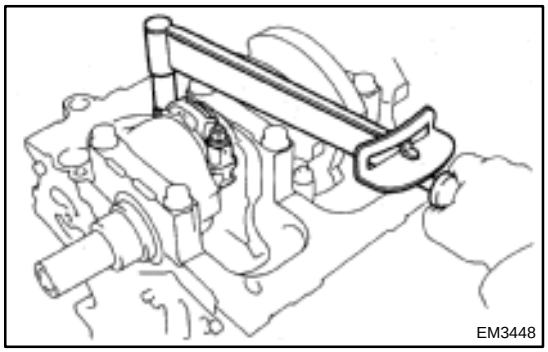

(c) Apply a light coat of engine oil on the threads and under the nuts of the connecting rod cap.

(d) Install and alternately tighten the nuts of the connecting rod cap in several passes.
Torque: 40 N·m (400 kgf·cm, 29 ft·lbf)

(e) Check that the crankshaft turns smoothly.

(f) Check the connecting rod thrust clearance (See page EM–68).

10. INSTALL REAR OIL SEAL RETAINER

(a) Remove any old packing (FIPG) material and be careful not to drop any oil on the contact surfaces of the rear oil seal retainer and cylinder block.

- Using a razor blade and gasket scraper, remove all the old packing (FIPG) material from the gasket surfaces and sealing groove.
- Thoroughly clean all components to remove all the loose material.
- Using a non–residue solvent, clean both sealing surfaces.

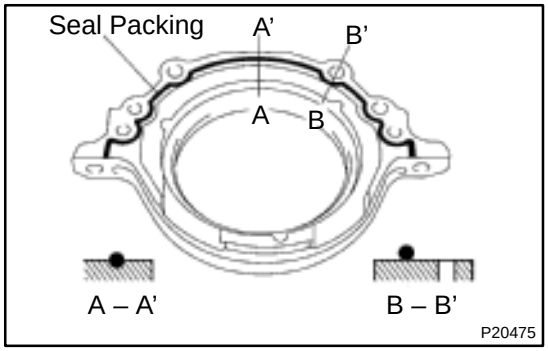

(b) Apply seal packing to the rear oil seal retainer as shown in the illustration.
Seal packing:
Part No. 08826–00080 or equivalent

- Install a nozzle that has been cut to a 2 – 3 mm (0.08 – 0.12 in.) opening.
- Parts must be assembled within 5 minutes of application. Otherwise the material must be removed and reapplied.
- Immediately remove nozzle from the tube and reinstall cap.

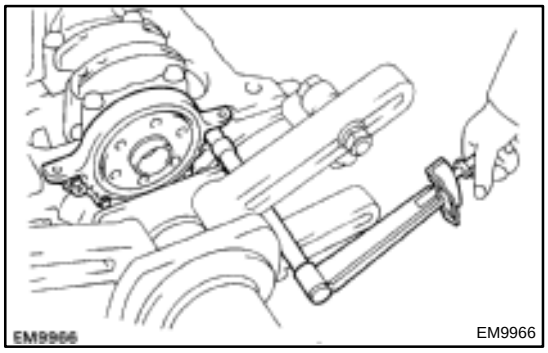

(c) Install the oil seal retainer with the 4 bolts.
Torque: 7.5 N·m (75 kgf·cm, 65 in.·lbf)

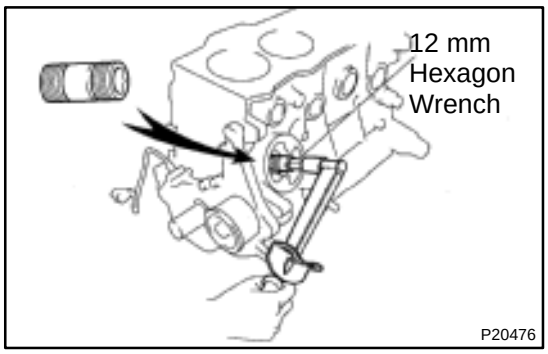

11. INSTALL OIL FILTER UNION

Using a 12 mm hexagon wrench, install the oil filter union.

Torque: 25 N·m (250 kgf·cm, 18 ft·lbf)

12. INSTALL OIL PUMP AND PRESSURE REGULATOR VALVE

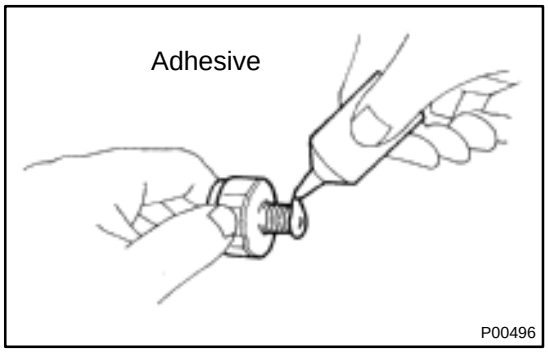

13. INSTALL OIL PRESSURE SWITCH

(a) Clean the switch threads and cylinder block switch holes of any sealer, oil or foreign materials.
Remove any oil with kerosene or gasoline.

(b) Apply adhesive to 2 or 3 threads of the switch end.
Adhesive:
Part No. 08833–00080, THREE BOND 1344, LOCTITE 242 or equivalent

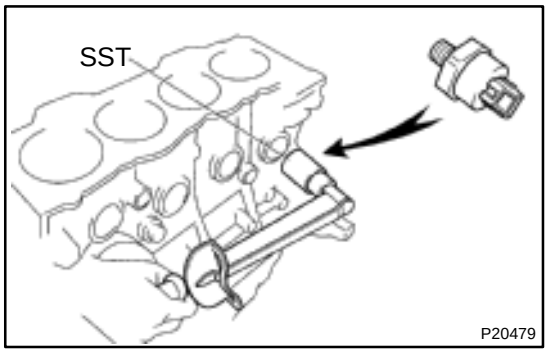

(c) Using SST, install the oil pressure switch.
SST 09816–30010
Torque: 13 N·m (130 kgf·cm, 9 ft·lbf)

14. INSTALL OIL FILTER
(See page LU–1)

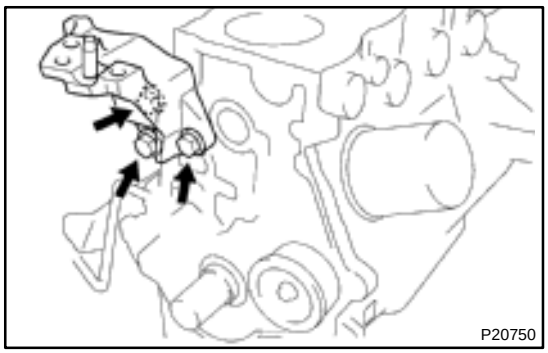

15. INSTALL RH ENGINE MOUNTING BRACKET
Torque: 58 N·m (590 kgf·cm, 43 ft·lbf)

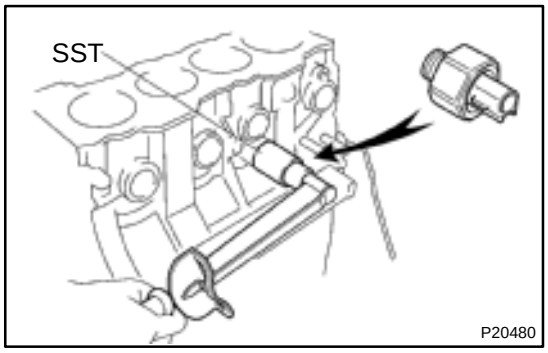

16. INSTALL KNOCK SENSOR

Using SST, install the knock sensor.
SST 09816–30010
Torque: 45 N·m (450 kgf·cm, 33 ft·lbf)

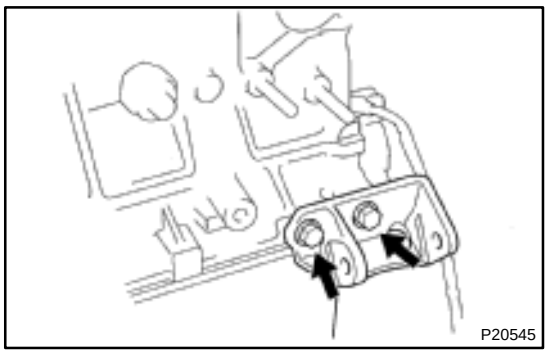

17. INSTALL GENERATOR BRACKET
Torque: 24 N·m (240 kgf·cm, 18 ft·lbf)
18. INSTALL WATER PUMP WITH WATER INLET PIPE
19. INSTALL OIL DIPSTICK GUIDE AND GENERATOR ADJUSTING BAR
20. INSTALL CYLINDER HEAD
21. INSTALL TIMING BELT AND PULLEYS
22. REMOVE ENGINE STAND

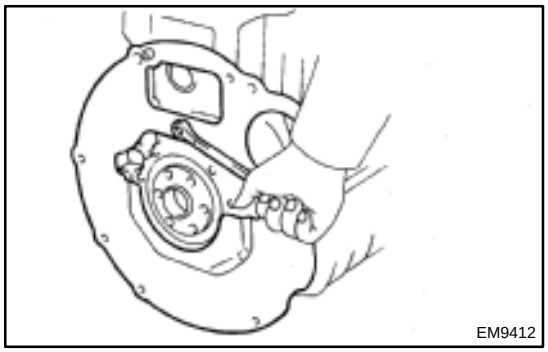

23. INSTALL REAR END PLATE
Torque: 10 N·m (100 kgf·cm, 7 ft·lbf)

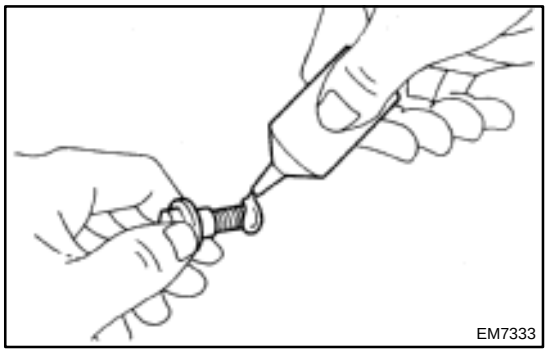

24. M/T:
INSTALL FLYWHEEL
(a) Apply adhesive to 2 or 3 threads of new mounting bolt end.
Adhesive:
Part No. 08833–00070, THREE BOND 1324 or equivalent

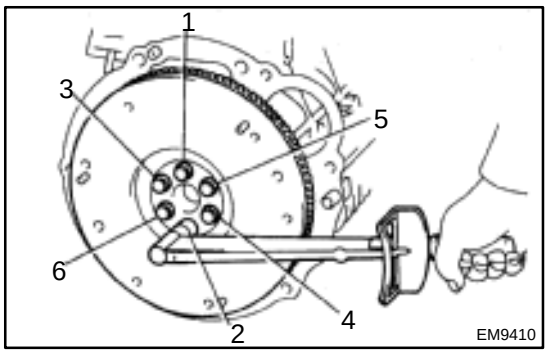

(b) Install the flywheel on the crankshaft.
(c) Install and uniformly tighten the mounting bolts, in several passes, in the sequence shown.
Torque: 90 N·m (900 kgf·cm, 65 ft·lbf)
25. A/T:
INSTALL DRIVE PLATE (See step 24)
26. M/T:
INSTALL CLUTCH DISC AND COVER

EM0JS–03

REPLACEMENT

1. REPLACE CRANKSHAFT FRONT OIL SEAL

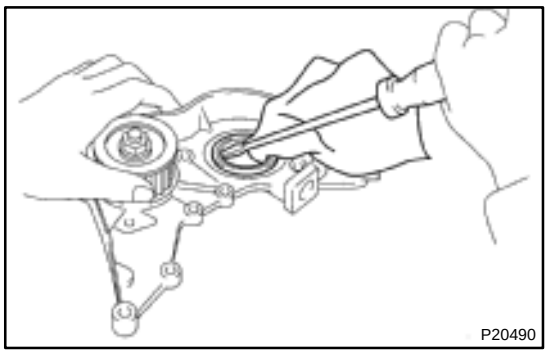

HINT:
There are 2 methods to replace the oil seal which are as follows:
If oil pump is removed from cylinder block:
(a) Using a screwdriver, pry out the oil seal.

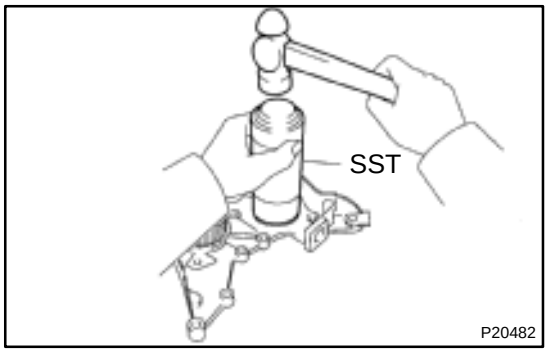

(b) Using SST and a hammer, tap in a new oil seal until its surface is flush with the oil pump case edge.
SST 09309–37010
(c) Apply MP grease to the oil seal lip.

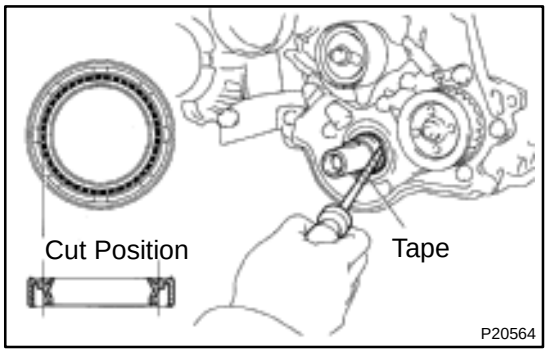

If oil pump is installed to the cylinder block:
(d) Using a knife, cut off the oil seal lip.
(e) Using a screwdriver, pry out the oil seal.

NOTICE:
Be careful not to damage the crankshaft.
Tape the screwdriver tip.

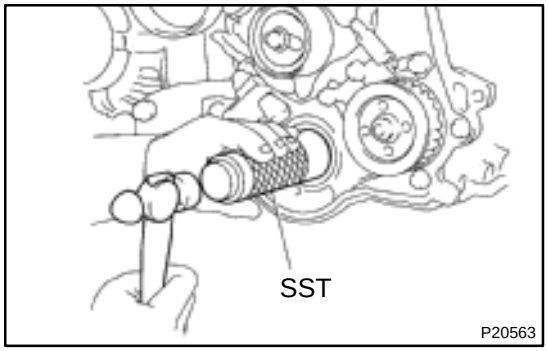

(f) Apply MP grease to a new oil seal lip.
(g) Using SST and a hammer, tap in the oil seal until its surface is flush with the oil pump case edge.
SST 09309–37010

2. REPLACE CRANKSHAFT REAR OIL SEAL

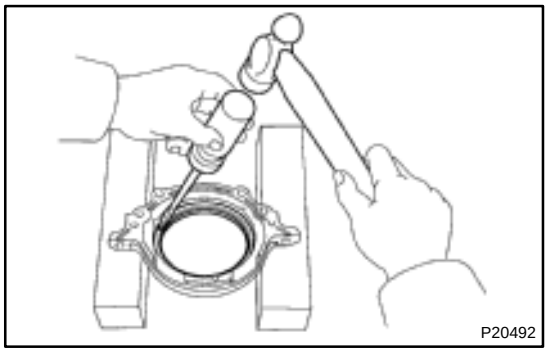

HINT:
There are 2 methods to replace the oil seal which are as follows:
If rear oil retainer is removed from cylinder block:
(a) Using a screwdriver and hammer, tap out the oil seal.

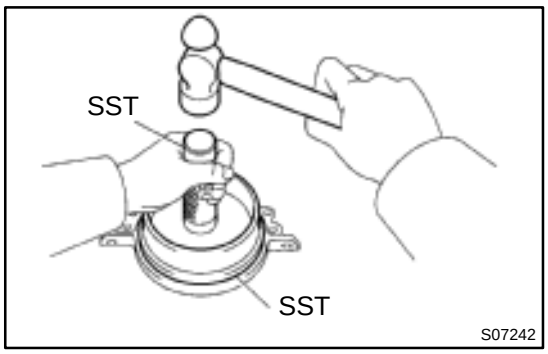

(b) Using SST and a hammer, tap in a new oil seal until its surface is flush with the rear oil seal edge.
SST 09223–15030, 09550–10012 (09552–10010)
(c) Apply MP grease to the oil seal lip.

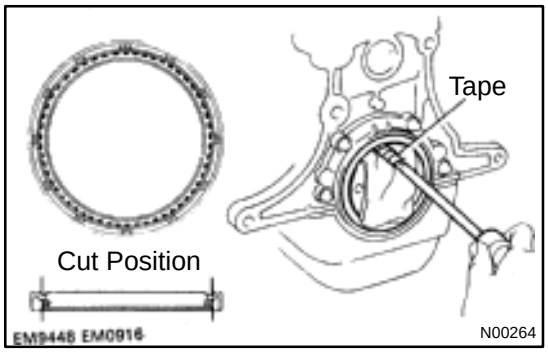

If rear oil seal retainer is installed to cylinder block:
(d) Using a knife, cut off the oil seal lip.
(e) Using a screwdriver, pry out the oil seal.

NOTICE:
Be careful not to damage the crankshaft.
Tape the screwdriver tip.

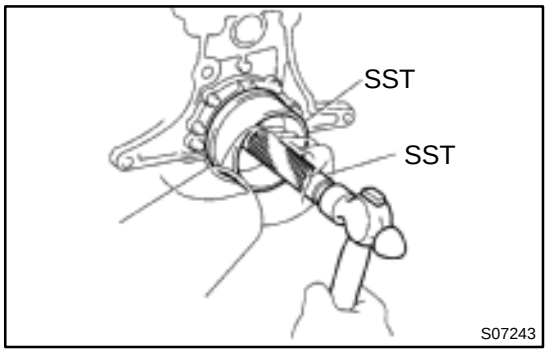

(f) Apply MP grease to a new oil seal lip.
(g) Using SST and a hammer, tap in the oil seal until its surface is flush with the rear oil seal retainer edge.
SST 09223–15030, 09550–10012 (09552–10010)

CYLINDER HEAD

COMPONENTS

EM0JX–04

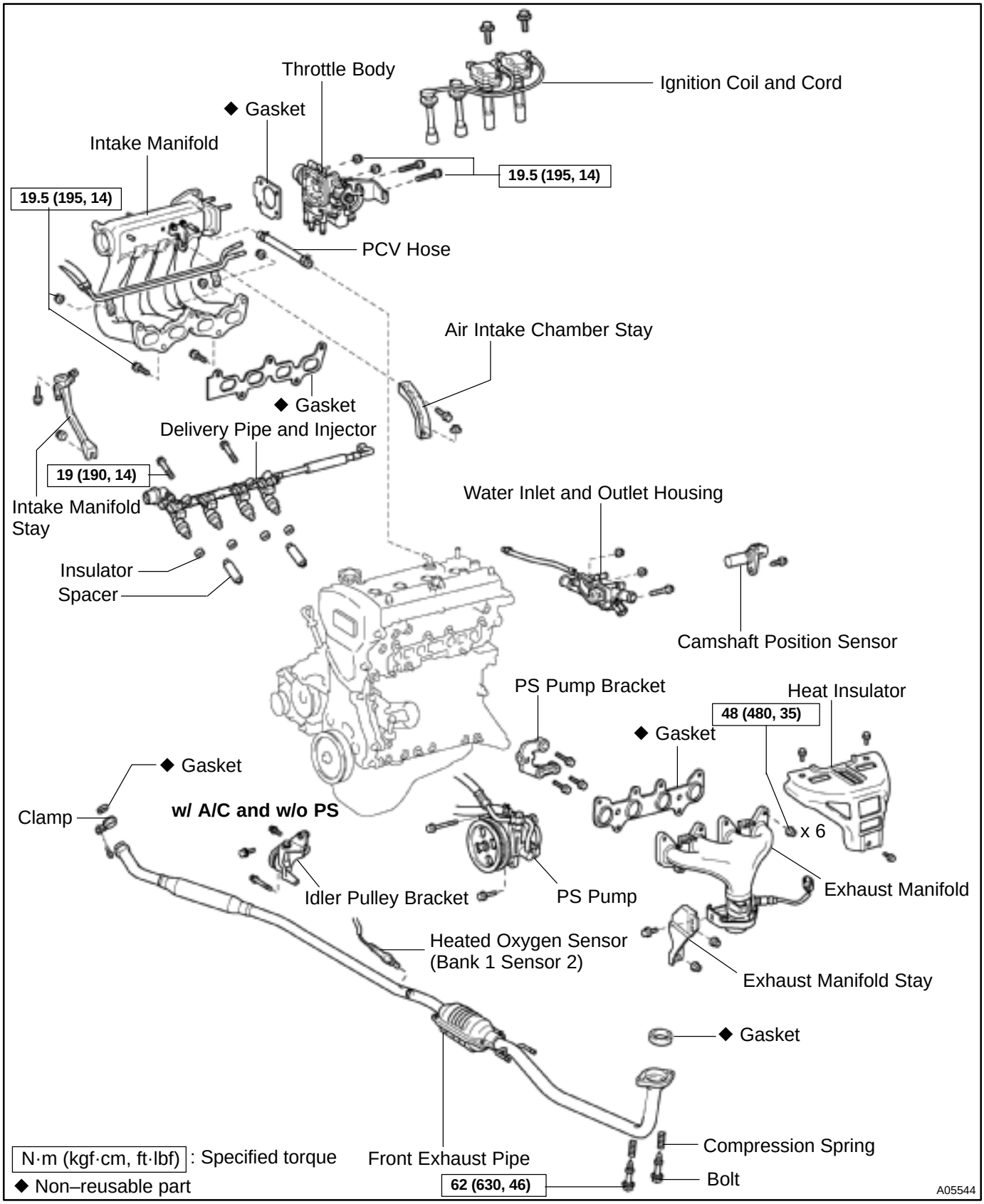

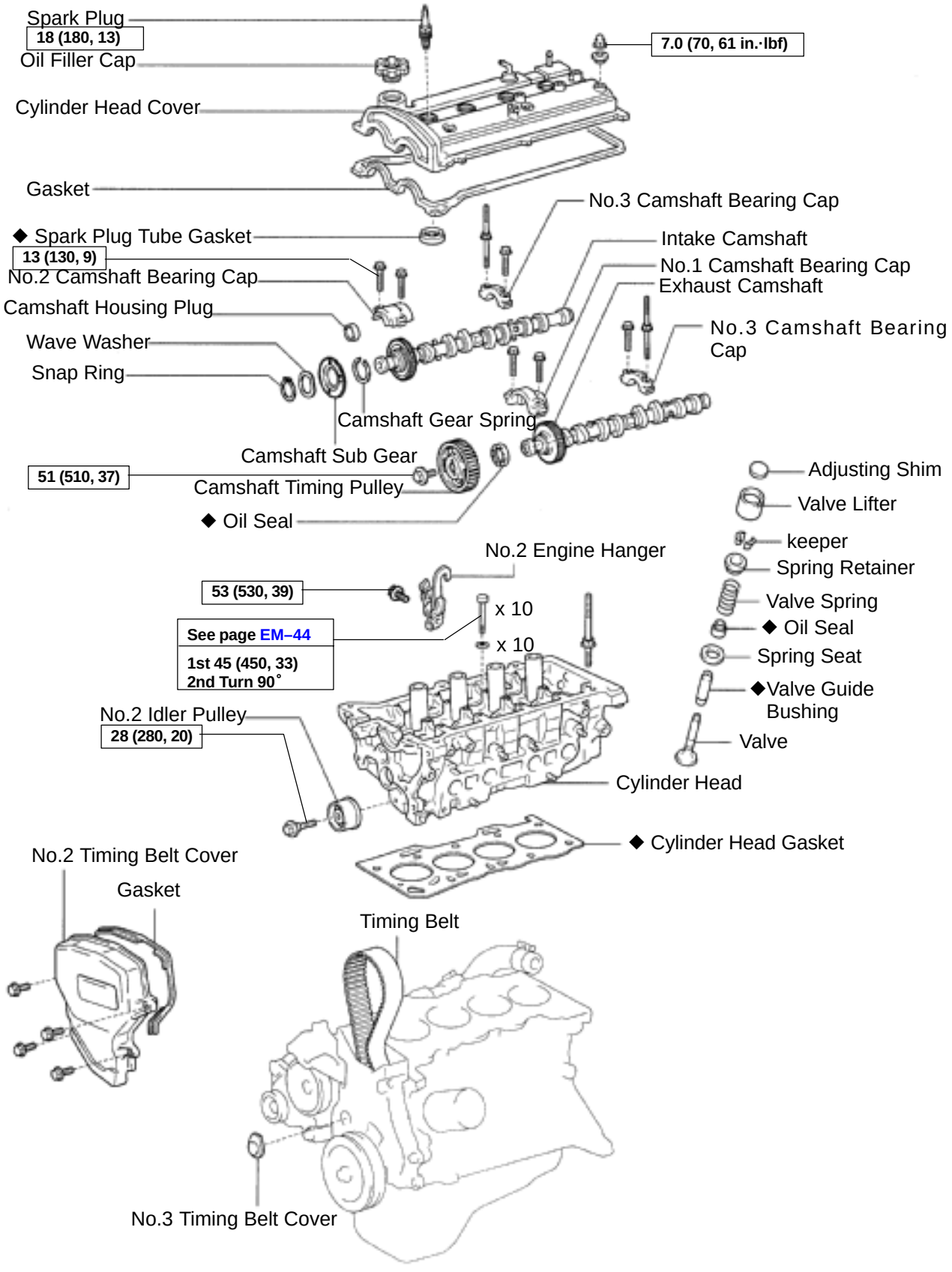

N·m (kgf·cm, ft·lbf) : Specified torque
◆ Non–reusable part

A05761

EM0JZ–01

DISASSEMBLY

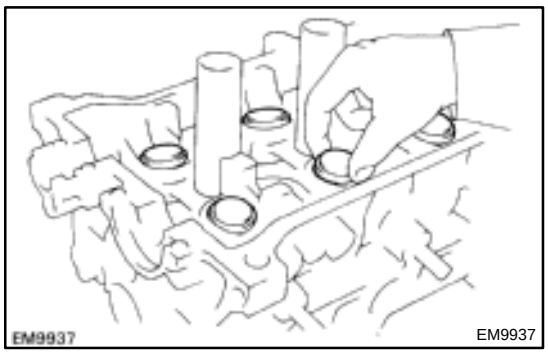

1. REMOVE NO.2 ENGINE HANGER

2. REMOVE STUD BOLT FOR CYLINDER HEAD COVER

3. REMOVE VALVE LIFTERS AND SHIMS

HINT:

Arrange the valve lifters and shims in correct order.

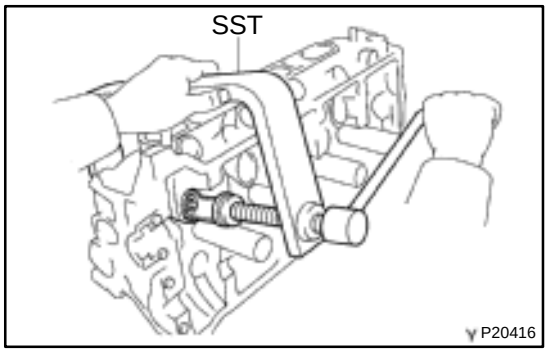

4. REMOVE VALVES

(a) Using SST, compress the valve spring and remove the 2 keepers.

SST 09202–70020

(b) Remove the spring retainer, valve spring, valve and spring seat.

HINT:

Arrange the valves, valve springs, spring seats and spring retainers in correct order.

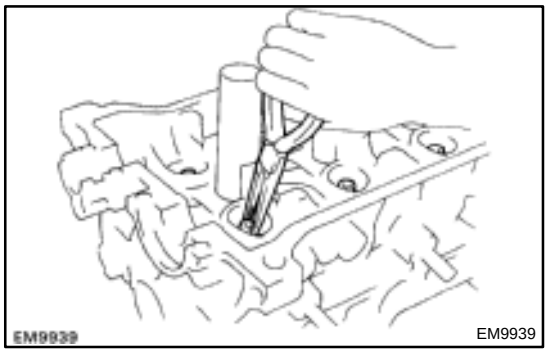

(c) Using needle–nose pliers, remove the oil seal.

EM0K0–04

INSPECTION

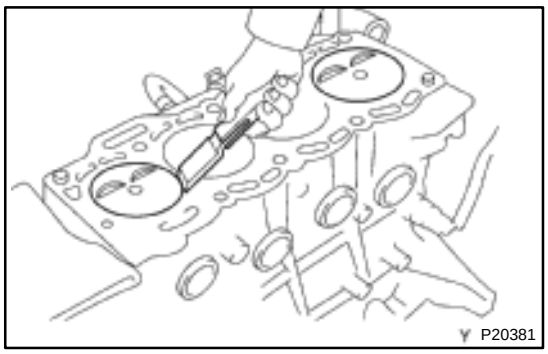

1. CLEAN TOP SURFACES OF PISTONS AND CYLINDER BLOCK

(a) Turn the crankshaft, and bring each piston to top dead center (TDC). Using a gasket scraper, remove all the carbon from the piston top surface.

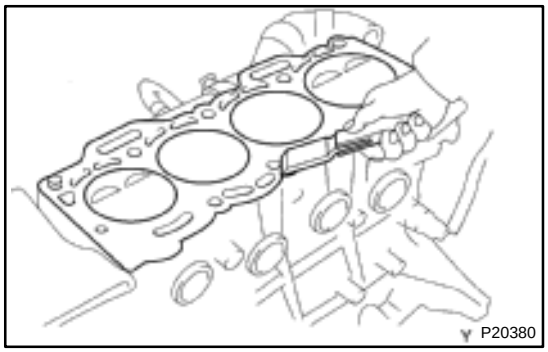

(b) Using a gasket scraper, remove all the gasket material from the cylinder block surface.

(c) Using compressed air, blow carbon and oil from the bolt holes.

CAUTION:
Protect your eyes when using high–pressure compressed air.

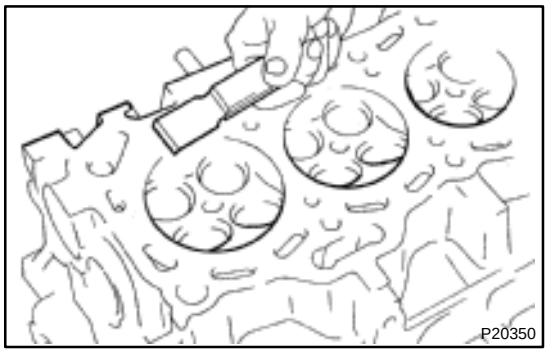

2. CLEAN CYLINDER HEAD

(a) Remove gasket material.
Using a gasket scraper, remove all the gasket material from the cylinder block contact surface.

NOTICE:
Be careful not to scratch the cylinder block contact surface.

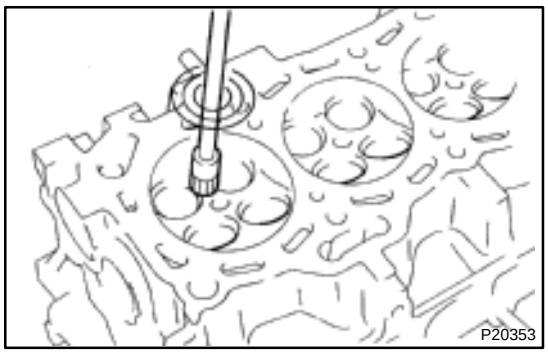

(b) Clean combustion chambers.
Using a wire brush, remove all the carbon from the combustion chambers.

NOTICE:
Be careful not to scratch the cylinder block contact surface.

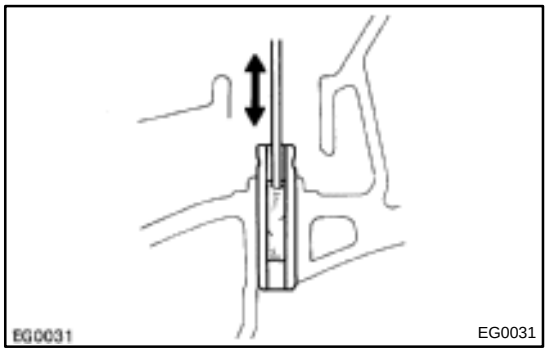

(c) Clean valve guide bushings.
Using a valve guide bushing brush and solvent, clean all the guide bushings.

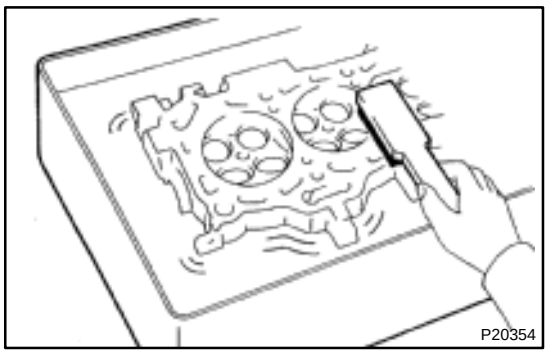

(d) Clean cylinder head.
Using a soft brush and solvent, thoroughly clean the cylinder head.

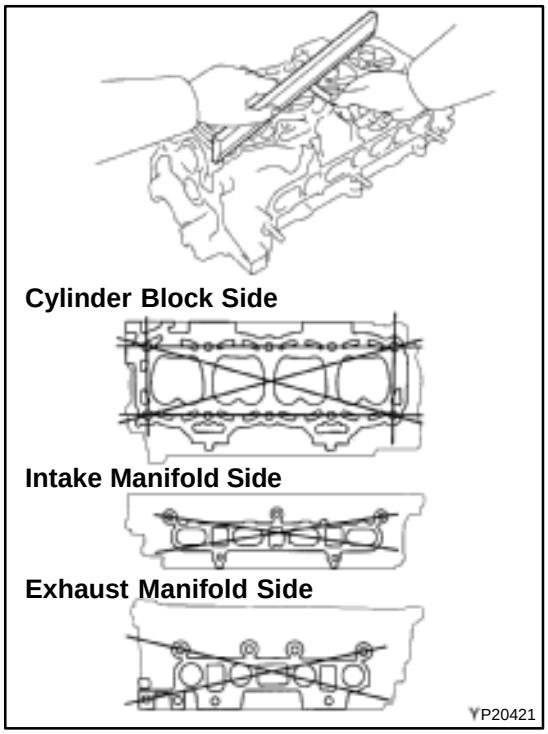

3. INSPECT CYLINDER HEAD

(a) Inspect for flatness.
Using a precision straight edge and feeler gauge, measure the surfaces contacting the cylinder block and the manifolds for warpage.
Maximum warpage:

Cylinder block side	0.05 mm (0.0020 in.)
Manifold side	0.05 mm (0.0020 in.)

If warpage is greater than maximum, replace the cylinder head.



(b) Inspect for cracks.
Using a dye penetrant, check the combustion chambers, intake ports, exhaust ports and cylinder block surface for cracks.

If cracked, replace the cylinder head.

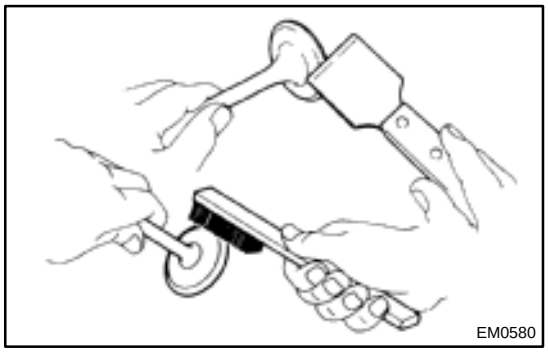

4. CLEAN VALVES

(a) Using a gasket scraper, chip off any carbon from the valve head.
(b) Using a wire brush, thoroughly clean the valve.

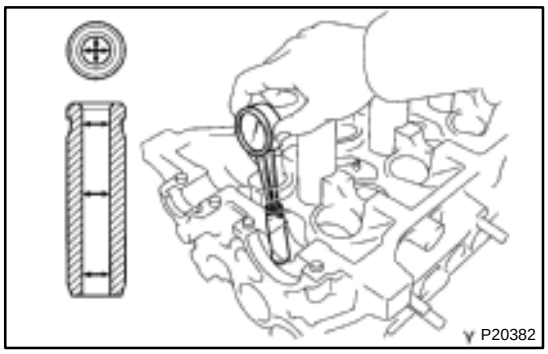

5. INSPECT VALVE STEMS AND GUIDE BUSHINGS

(a) Using a caliper gauge, measure the inside diameter of the guide bushing.

Bushing inside diameter:
6.010 – 6.030 mm (0.2366 – 0.2374 in.)

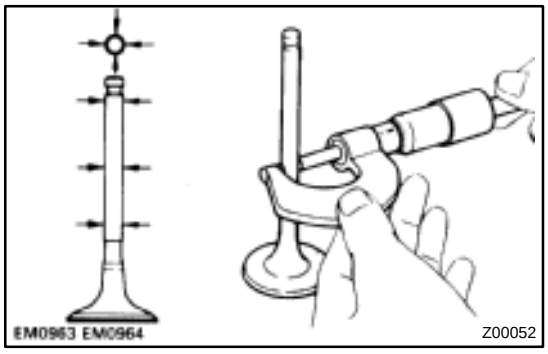

(b) Using a micrometer, measure the diameter of the valve stem.

Valve stem diameter:

Intake	5.970 – 5.985 mm (0.2350 – 0.2356 in.)
Exhaust	5.965 – 5.980 mm (0.2348 – 0.2354 in.)

(c) Subtract the valve stem diameter measurement from the guide bushing inside diameter measurement.

Standard oil clearance:

Intake	0.025 – 0.060 mm (0.0010 – 0.0024 in.)
Exhaust	0.030 – 0.065 mm (0.0012 – 0.0026 in.)

Maximum oil clearance:

Intake	0.08 mm (0.0031 in.)
Exhaust	0.10 mm (0.0039 in.)

If the clearance is greater than maximum, replace the valve and guide bushing (See page EM–40).

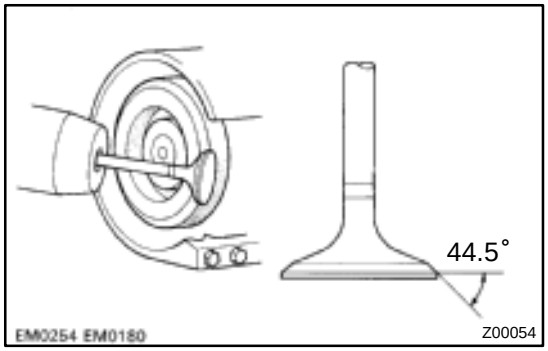

6. INSPECT AND GRIND VALVES

(a) Grind the valve enough to remove pits and carbon.

(b) Check that the valve is ground to the correct valve face angle.

Valve face angle:
44.5°

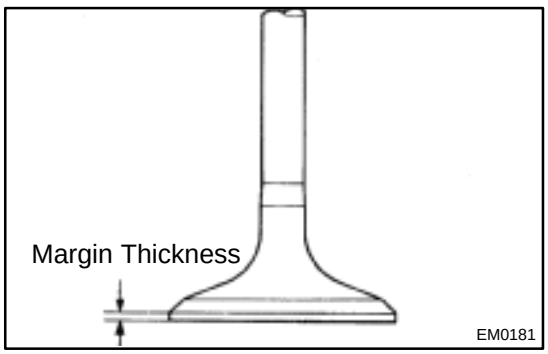

(c) Check the valve head margin thickness.

Standard margin thickness:
0.8 – 1.2 mm (0.031 – 0.047 in.)
Minimum margin thickness:
0.5 mm (0.020 in.)

If the margin thickness is less than minimum, replace the valve.

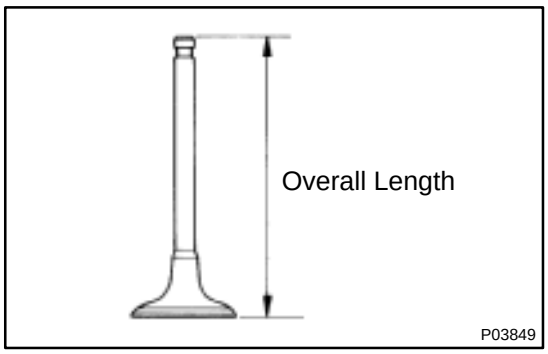

(d) Check the valve overall length.

Standard overall length:

Intake	93.45 mm (3.6791 in.)
Exhaust	93.89 mm (3.6768 in.)

Minimum overall length:

Intake	92.95 mm (3.6594 in.)
Exhaust	93.39 mm (3.6768 in.)

If the overall length is less than minimum, replace the valve.

(e) Check the surface of the valve stem tip for wear.

If the valve stem tip is worn, resurface the tip with a grinder or replace the valve.

NOTICE:

Do not grind off more than minimum.

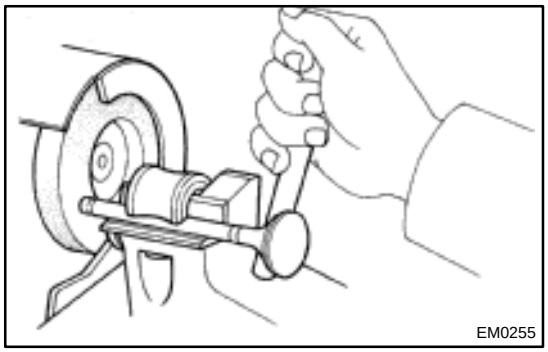

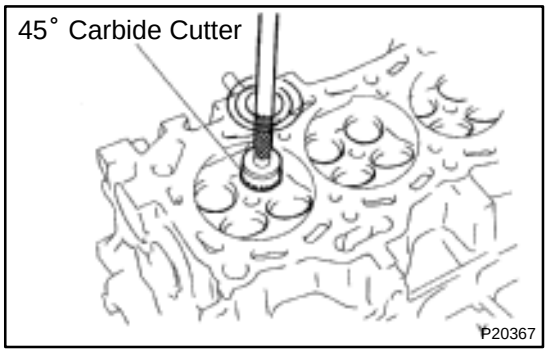

7. INSPECT AND CLEAN VALVE SEATS

(a) Using a 45˚ carbide cutter, resurface the valve seats. Remove only enough metal to clean the seats.

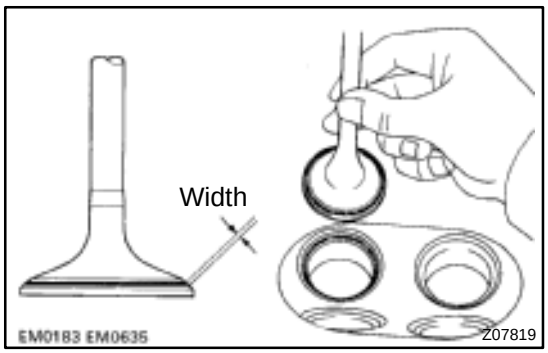

(b) Check the valve seating position.

Apply a light coat of prussian blue (or white lead) to the valve face. Lightly press the valve against the seat. Do not rotate valve.

(c) Check the valve face and seat for the following:

- If blue appears 360˚ around the face, the valve is concentric. If not, replace the valve.
- If blue appears 360˚ around the valve seat, the guide and face are concentric. If not, resurface the seat.
- Check that the seat contact is in the middle of the valve face with the following width:

1.0 – 1.4 mm (0.039 – 0.055 in.)

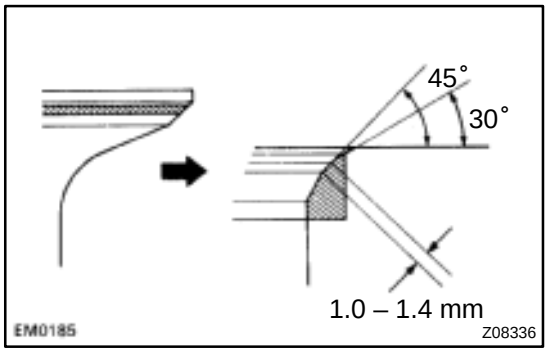

If not, correct the valve seats as follows:

(1) If the seating is too high on the valve face, use 30˚ and 45˚ cutters to correct the seat.

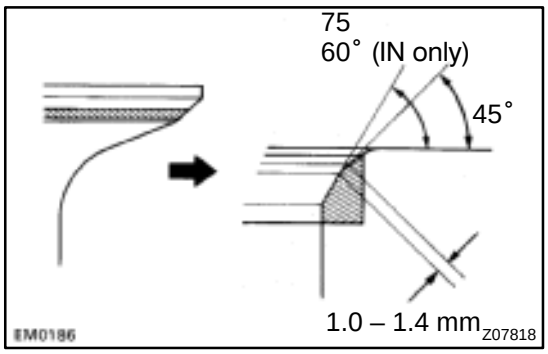

(2) If the seating is too low on the valve face, use 75˚, 60˚ (IN only) and 45˚ cutters to correct the seat.

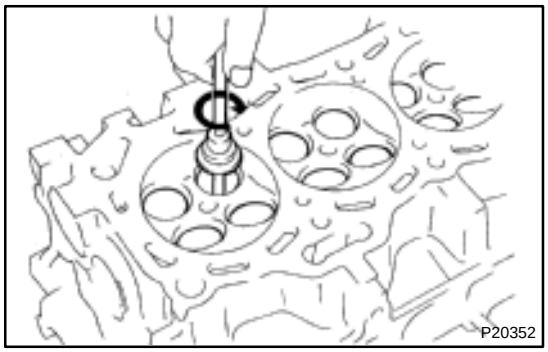

(d) Hand–lap the valve and valve seat with an abrasive compound.
(e) After hand–lapping, clean the valve and valve seat.

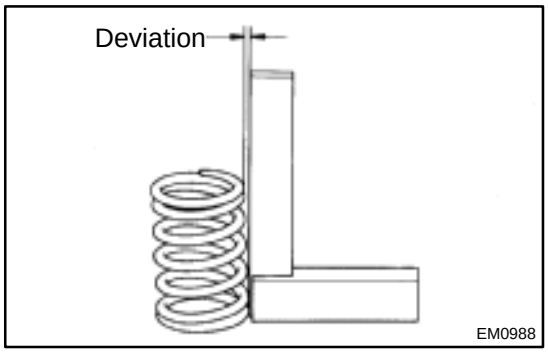

8. INSPECT VALVE SPRINGS

(a) Using a steel square, measure the deviation of the valve spring.

Maximum deviation: 2.0 mm (0.079 in.)

If the deviation is greater than maximum, replace the valve spring.

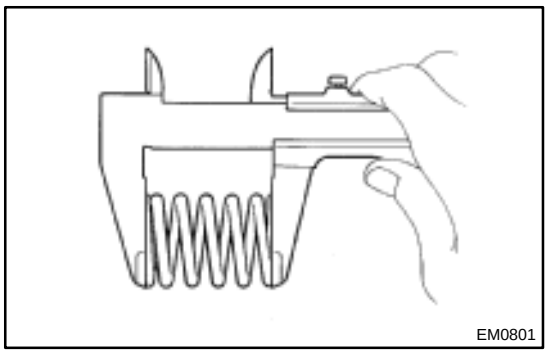

(b) Using a vernier caliper, measure the free length of the valve spring.

Free length: 53.58 mm (2.1094 in.)

If the free length is not as specified, replace the valve spring.

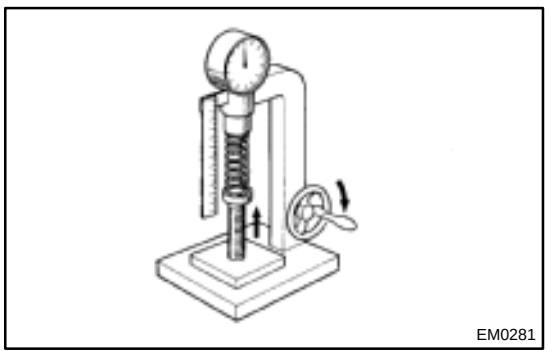

(c) Using a spring tester, measure the tension of the valve spring at the specified installed length.

Installed tension:
148 – 164 N (15.1 – 16.7 kgf, 33.3 – 36.8 lbf)
at 31.8 mm (1.252 in.)

If the installed tension is not as specified, replace the valve spring.

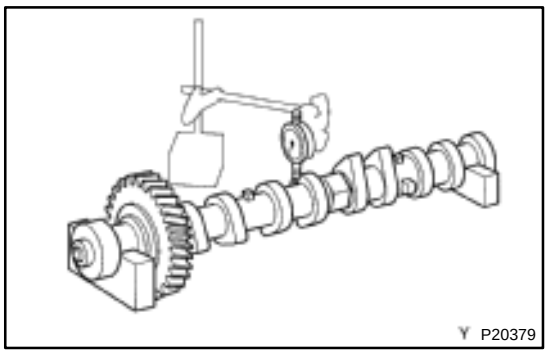

9. INSPECT CAMSHAFTS AND BEARINGS

Inspect camshaft for runout

(1) Place the camshaft on V–blocks.

(2) Using a dial indicator, measure the circle runout at the center journal.

Maximum circle runout: 0.04 mm (0.0016 in.)

If the circle runout is greater than maximum, replace the camshaft.

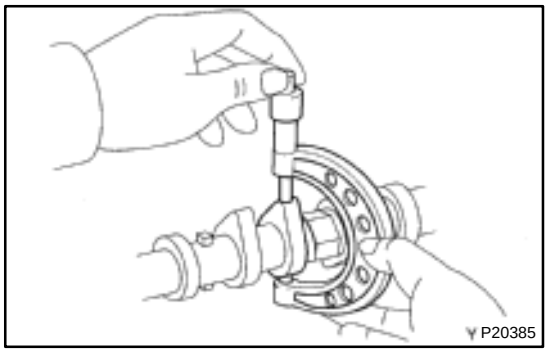

10. INSPECT CAM LOBES

Using a micrometer, measure the cam lobe height.

Standard cam lobe height:

Intake	41.514 – 41.614 mm (1.6344 – 1.6383 in.)
Exhaust	41.011 – 41.111 mm (1.6146 – 1.6185 in.)

Minimum cam lobe height:

Intake	41.35 mm (1.6279 in.)
Exhaust	40.85 mm (1.6083 in.)

If the cam lobe height is less than minimum, replace the camshaft.

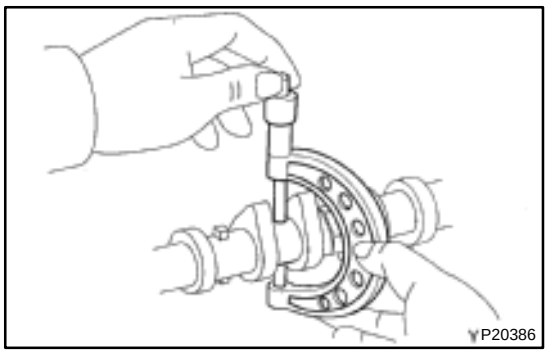

11. INSPECT CAMSHAFT JOURNALS

Using a micrometer, measure the journal diameter.

Journal diameter:

Exhaust No.1	24.949 – 24.965 mm (0.9822 – 0.9829 in.)
Others	22.949 – 22.965 mm (0.9035 – 0.9041 in.)

If the journal diameter is not as specified, check the oil clearance.

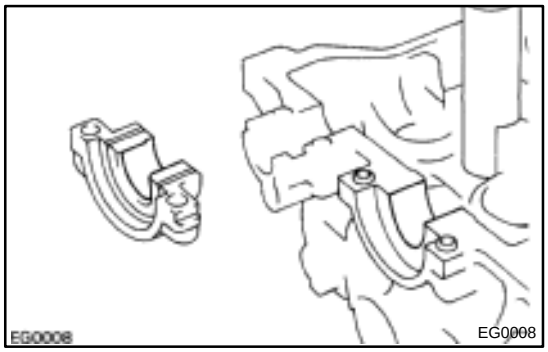

12. INSPECT CAMSHAFT BEARINGS

Check that bearings for flaking and scoring.

If the bearings are damaged, replace the bearing caps and cylinder head as a set.

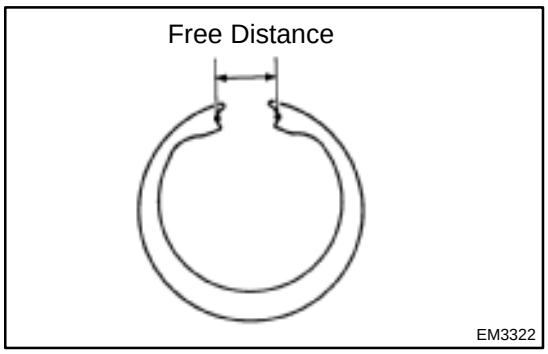

13. INSPECT CAMSHAFT GEAR SPRING

Using a vernier caliper, measure the free distance between the spring ends.

Free distance:
22.5 – 22.9 mm (0.886 – 0.902 in.)

If the free distance is not as specified, replace the gear spring.

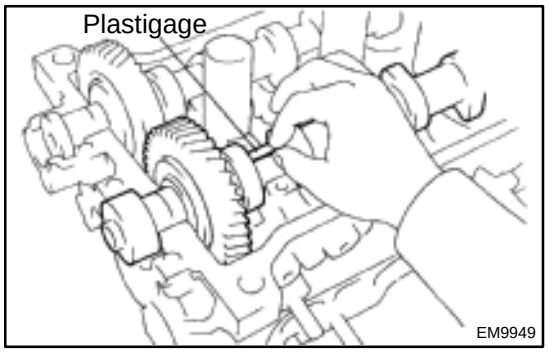

14. INSPECT CAMSHAFT JOURNAL OIL CLEARANCE

(a) Clean the bearing caps and camshaft journals.
(b) Place the camshafts on the cylinder head.
(c) Lay a strip of Plastigage across each of the camshaft journals.

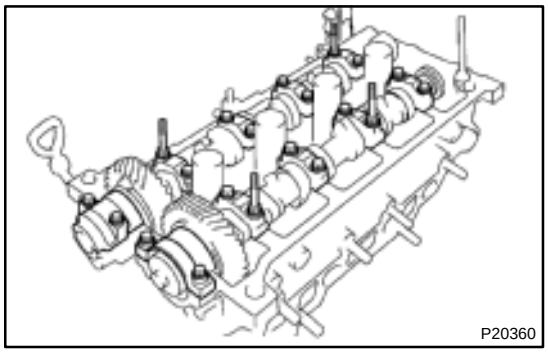

(d) Install the bearing caps (See page EM–44).
Torque: 13 N·m (130 kgf·cm, 9 ft·lbf)

NOTICE:
Do not turn the camshaft.

(e) Remove the bearing caps.

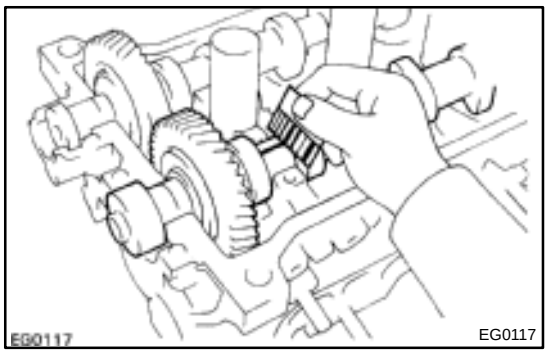

(f) Measure the Plastigage at its widest point.
Standard oil clearance:
0.035 – 0.072 mm (0.0014 – 0.0028 in.)
Maximum oil clearance:
0.10 mm (0.0039 in.)

If the oil clearance is greater than maximum, replace the camshaft. If necessary, replace the bearing caps and cylinder head as a set.

(g) Completely remove the Plastigage.

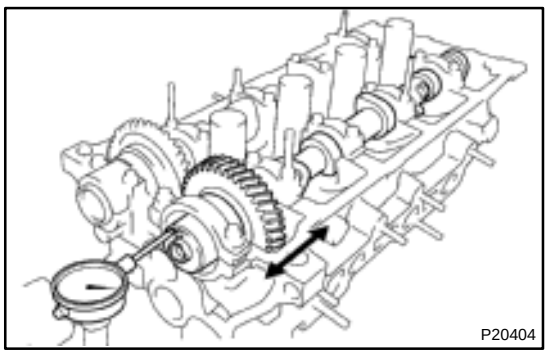

15. INSPECT CAMSHAFT THRUST CLEARANCE

(a) Install the camshaft (See page EM–44).
(b) Using a dial indicator, measure the thrust clearance while moving the camshaft back and forth.
Standard thrust clearance:
0.045 – 0.100 mm (0.0018 – 0.0039 in.)
Maximum thrust clearance:
0.12 mm (0.0047 in.)

If the thrust clearance is greater than maximum, replace the camshaft. If necessary, replace the bearing caps and cylinder head as a set.

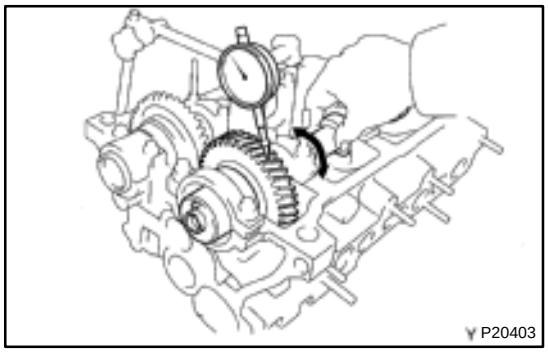

16. INSPECT CAMSHAFT GEAR BACKLASH

(a) Install the camshafts without installing the exhaust cam sub–gear (See page EM–44).

(b) Using a dial indicator, measure the backlash.
Standard backlash:
0.020 – 0.200 mm (0.0008 – 0.0079 in.)
Maximum backlash:
0.30 mm (0.0188 in.)

If the backlash is greater than maximum, replace the camshafts.

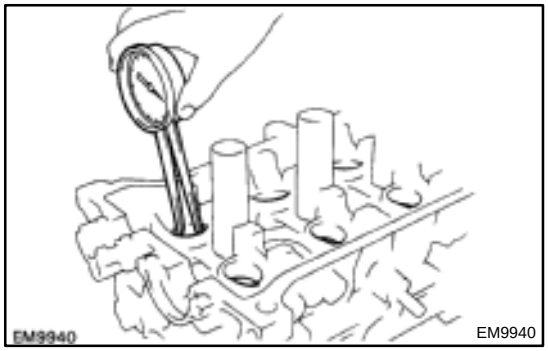

17. INSPECT VALVE LIFTERS AND LIFTER BORES

(a) Using a caliper gauge, measure the lifter bore diameter of the cylinder head.
Lifter bore diameter:
28.000 – 28.021 mm (1.1024 – 1.1032 in.)

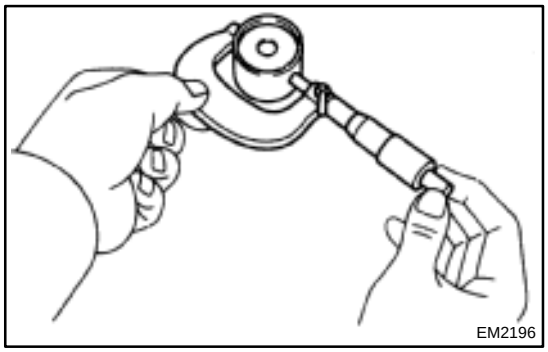

(b) Using a micrometer, measure the lifter diameter.
Lifter diameter:
27.975 – 27.985 mm (1.1014 – 1.1018 in.)

(c) Subtract the lifter diameter measurement from the lifter bore diameter measurement.
Standard oil clearance:
0.015 – 0.046 mm (0.0005 – 0.0018 in.)
Maximum oil clearance:
0.10 mm (0.0039 in.)

If the oil clearance is greater than maximum, replace the lifter.
If necessary, replace the cylinder head.

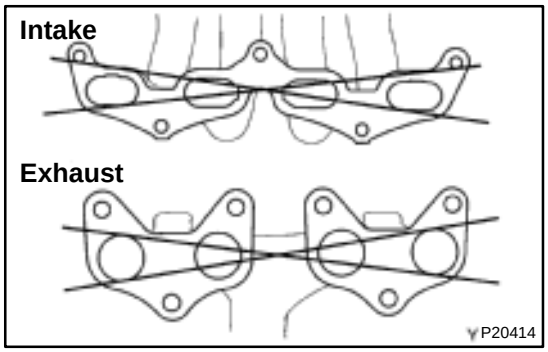

18. INSPECT INTAKE AND EXHAUST MANIFOLDS

Using a precision straight edge and feeler gauge, measure the surface contacting the cylinder head for warpage.

Maximum warpage:
Intake: 0.1 mm (0.004 in.)
Exhaust: 0.5 mm (0.020 in.)

If warpage is greater than maximum, replace the manifold.

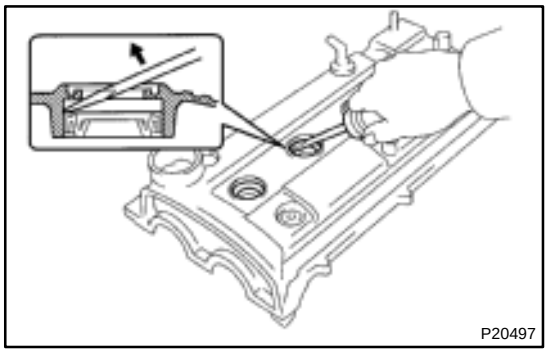

19. IF NECESSARY, REPLACE SPARK PLUG TUBE GASKETS

(a) Using a screwdriver, pry off the tube gasket.

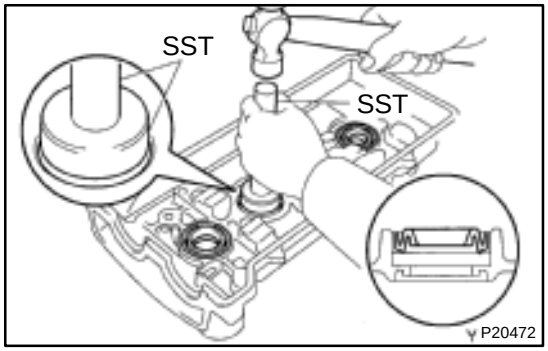

(b) Using SST and a hammer, tap in a new tube gasket until the upper edge of the cylinder head cover.
SST 09550–10012 (09252–10010, 09556–10010)

(c) Apply MP grease to the gasket lip.

EM0K3–04

INSTALLATION

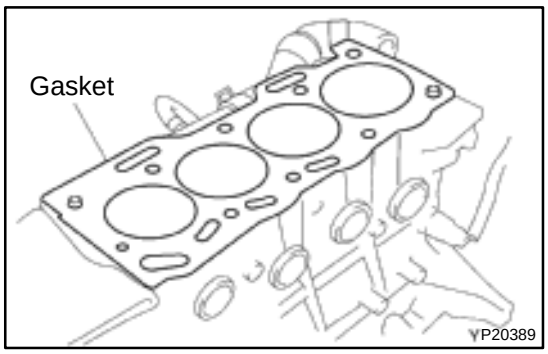

1. PLACE CYLINDER HEAD ON CYLINDER BLOCK

(a) Place a new cylinder head gasket in position on the cylinder block.

NOTICE:

Be careful of the installation direction.

(b) Place the cylinder head in position on the cylinder head gasket.

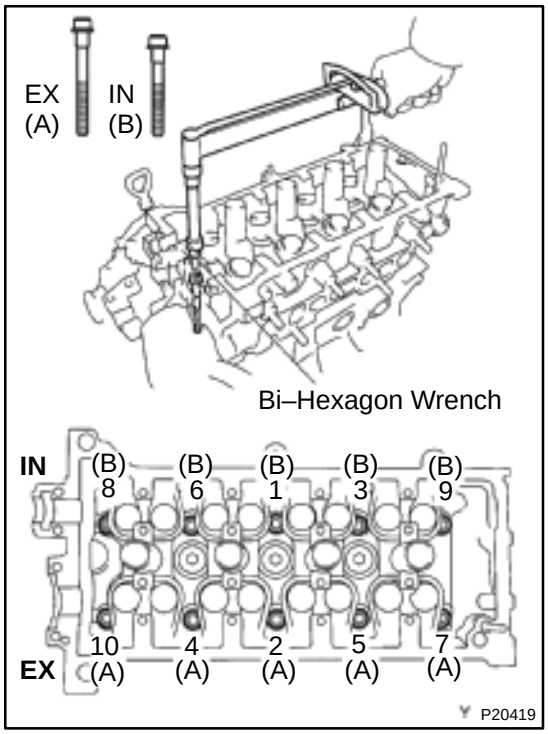

2. INSTALL CYLINDER HEAD BOLTS

HINT:

- The cylinder head bolts are tightened in 2 progressive steps (steps (b) and (d)).
- If any cylinder head bolt is broken or deformed, replace it.
- There are 2 lengths of cylinder head bolts, long (A) and short (B).

(a) Apply a light coat of engine oil on the threads and under the heads of the cylinder head bolts.

(b) First, using a bi–hexagon wrench 8 mm, install and uniformly tighten the 10 cylinder head bolts, in several passes, in the sequence shown.

Torque: 45 N·m (450 kgf·cm, 33 ft·lbf)

If any one of the cylinder head bolts does not meet the torque specification, replace the cylinder head bolt.

(c) Mark the front of the cylinder head bolt head with paint.

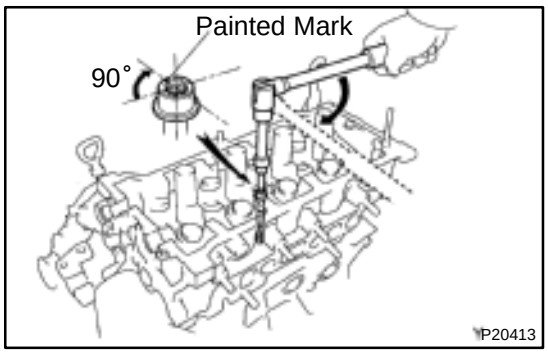

(d) Retighten the cylinder head bolts 90° in the numerical order shown.

(e) Check that the painted mark is now at a 90° angle to front.

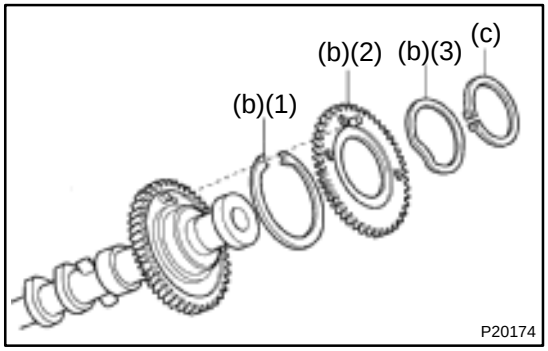

3. ASSEMBLE INTAKE CAMSHAFT

(a) Mount the hexagonal wrench head portion of the camshaft in a vise.

NOTICE:

Be careful not to damage the camshaft.

(b) Install these parts:

(1) Camshaft gear spring
(2) Camshaft sub–gear
(3) Wave washer

HINT:
Align the pins on the gears with the gear spring ends.

(c) Using snap ring pliers, install the snap ring.

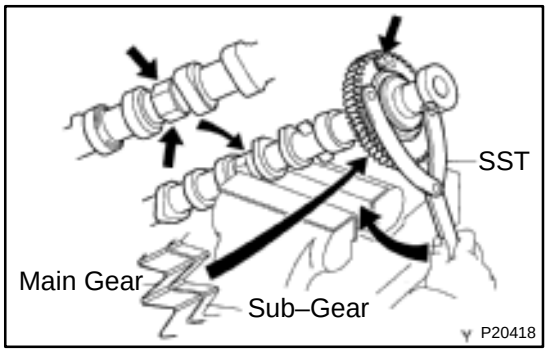

(d) Using SST, align the holes of the camshaft main gear and sub–gear by turning camshaft sub–gear clockwise, and install a service bolt.
SST 09960–10010 (09962–01000, 09963–00500)

4. INSTALL INTAKE AND EXHAUST CAMSHAFTS

NOTICE:

Since the thrust clearance of the camshaft is small, the camshaft must be kept level while it is being installed. If the camshaft is not kept level, the portion of the cylinder head receiving the shaft thrust may crack or be damaged, causing the camshaft to seize or break. To avoid this, the following steps should be carried out.

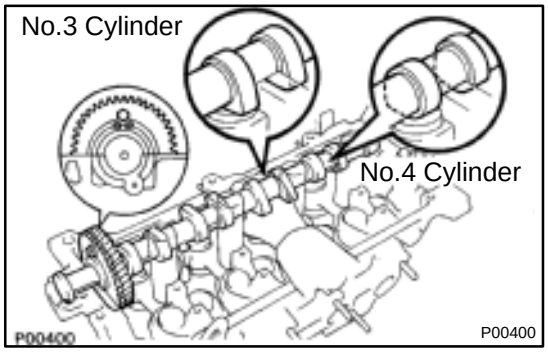

(a) Apply engine oil to the thrust portion of intake camshaft.
(b) Place the intake camshaft as shown in the illustration so that the service bolt of the intake camshaft gears are directly above.

HINT:
This helps to lift the intake camshaft in a level and uniform manner by pushing No.3 and No.4 cylinder cam lobes of the intake camshaft toward their vale lifters.

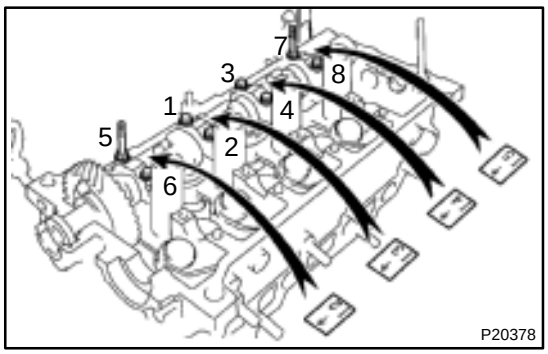

(c) Install the 4 bearing caps in their proper locations.
(d) Temporarily tighten the bearing cap bolts uniformly and alternately, in several passes, in the sequence shown until the bearing caps are snug with the cylinder head.

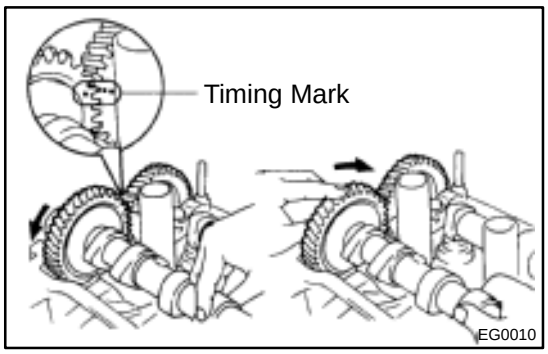

(e) Apply engine oil to thrust portion of the exhaust camshaft.
(f) Engage the exhaust camshaft gear to the intake camshaft gear by matching the timing marks on each gear.

NOTICE:

There are also assembly reference marks on each gear as shown in the illustration. Do not use these marks.

(g) Roll down the exhaust camshaft onto the bearing journals while engaging gears with each other.

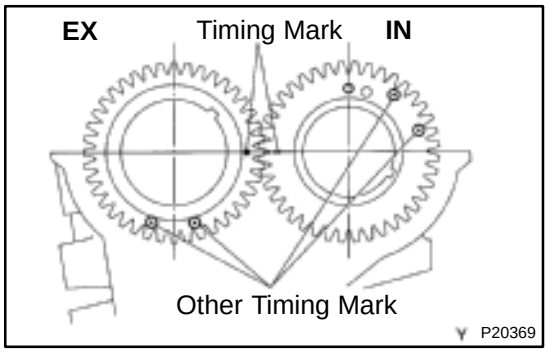

HINT:
The above angle allows the No.2 and No.4 cylinder cam lobes of the exhaust camshaft to push their valve lifters evenly.

(h) Lightly push the exhaust camshaft gear without applying excessive force.

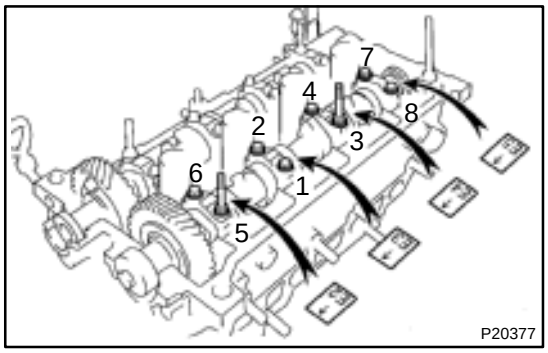

(i) Install the 4 bearing caps in their proper locations.
(j) Temporarily tighten the bearing cap bolts uniformly and alternately, in several passes, in the sequence shown until the bearing caps are snug with the cylinder head.
(k) Remove the service bolt.

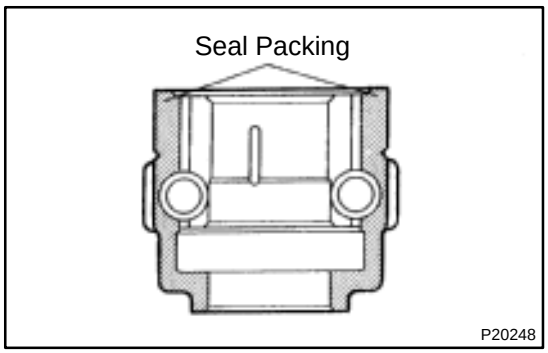

(l) Clean the installed surfaces of the No.2 bearing cap and cylinder head with cleaner.
(m) Apply seal packing to the No.2 bearing cap as shown.
Seal packing:
Part No. 08826–00080 or equivalent

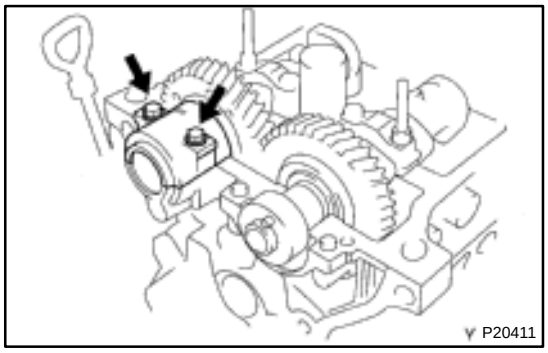

(n) Place the No.2 bearing cap in its proper location.
When doing this, check that there is no gap between the cylinder head and the contact surface of bearing cap.
(o) Temporarily tighten the bearing cap bolts, alternately tightening the left and right bolts uniformly.
(p) Install the camshaft housing plug.

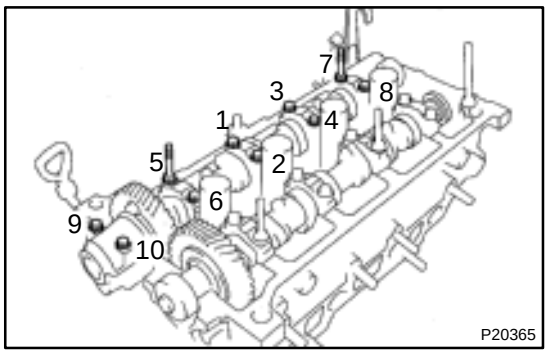

(q) Install and uniformly tighten the 10 bearing cap bolts, in several passes, in the sequence shown.
Torque: 13 N·m (130 kgf·cm, 9 ft·lbf)

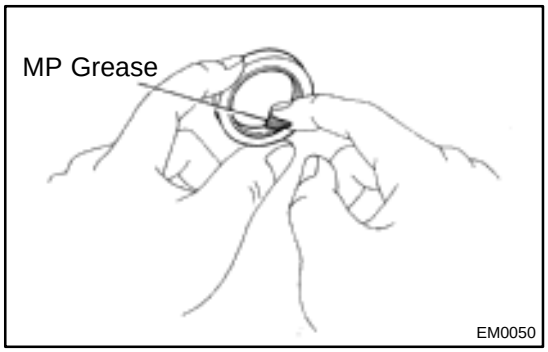

(r) Apply MP grease to a new camshaft oil seal lip.

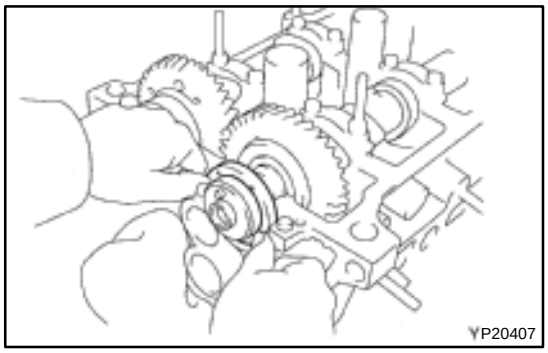

(s) Install the oil seal as far as the deepest part of the cylinder head.

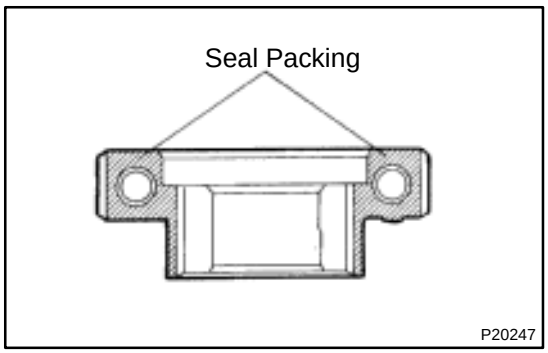

(t) Clean the installed surfaces of the No.1 bearing cap and cylinder head with cleaner.
(u) Apply seal packing to the No.1 bearing cap as shown.
Seal packing:
Part No. 08826–00080 or equivalent

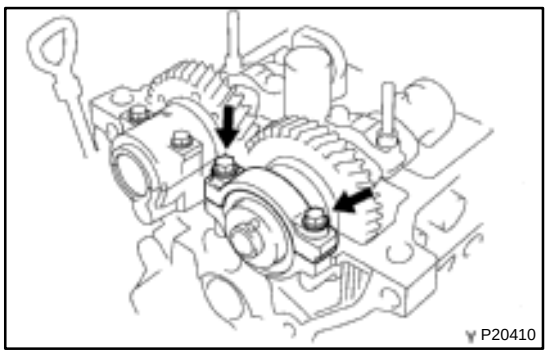

(v) Place the No.1 bearing cap in its proper location.
When doing this, check that there is no gap between the cylinder head and the contact surface of bearing cap.
(w) Temporarily tighten the bearing cap bolts, alternately tightening the left and right bolts uniformly.

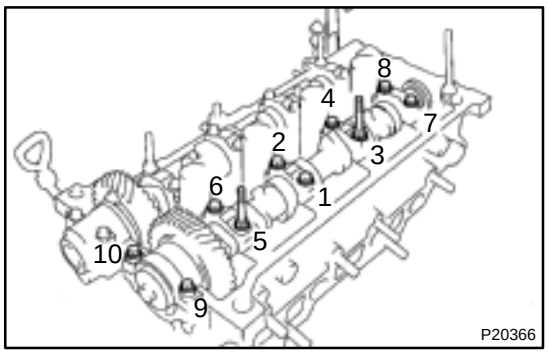

(x) Install and uniformly tighten the 10 bearing cap bolts, in several passes, in the sequence shown.
Torque: 13 N·m (130 kgf·cm, 9 ft·lbf)

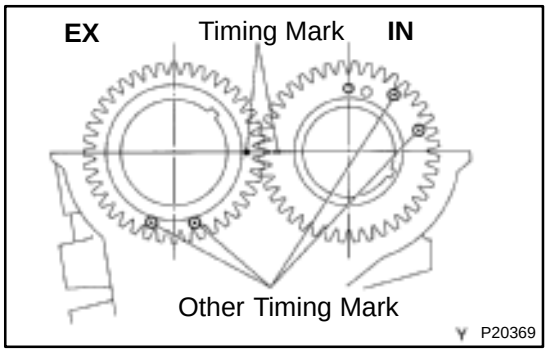

(y) Turn the camshaft 1 revolution and check that the timing marks of the camshaft gears are aligned.

5. CHECK AND ADJUST VALVE CLEARANCE
(See page EM–5)

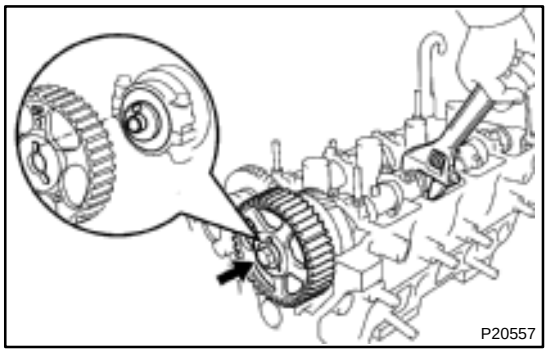

6. INSTALL CAMSHAFT TIMING PULLEY

(a) Align the camshaft knock pin with the knock pin groove on the pulley side with the 5E mark, and slide the pulley.

(b) Secure the hexagonal portion of the camshaft, and install and torque the bolt.
Torque: 51 N·m (510 kgf·cm, 37 ft·lbf)

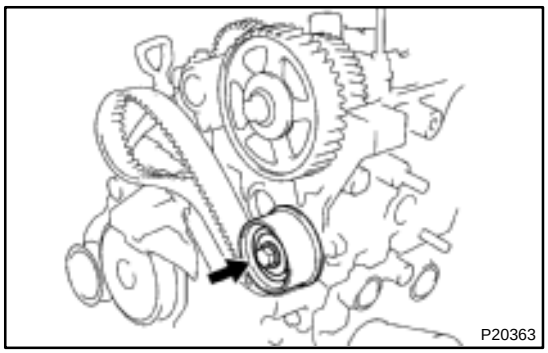

7. INSTALL NO.2 IDLER PULLEY

Install the idler pulley with the bolt. Torque the bolt.
Torque: 28 N·m (280 kgf·cm, 20 ft·lbf)

HINT:
Remove any oil or water on the idler pulley and keep it clean.

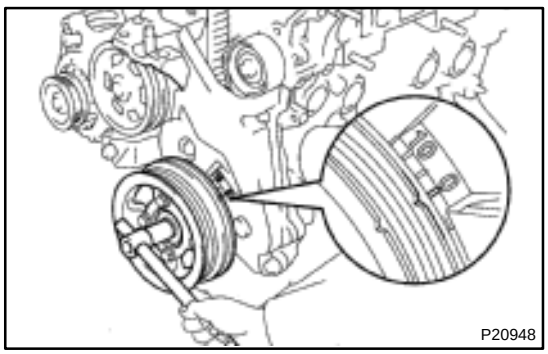

8. SET NO.1 CYLINDER TO TDC/COMPRESSION

(a) Turn the crankshaft pulley, and align its groove with timing mark ”0” of the No.1 timing belt cover.

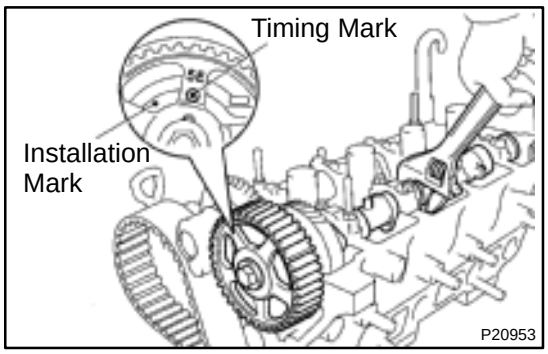

(b) Turn the camshaft, and align the hole of the camshaft timing pulley on the side with the 5E mark with the timing mark of the bearing cap.

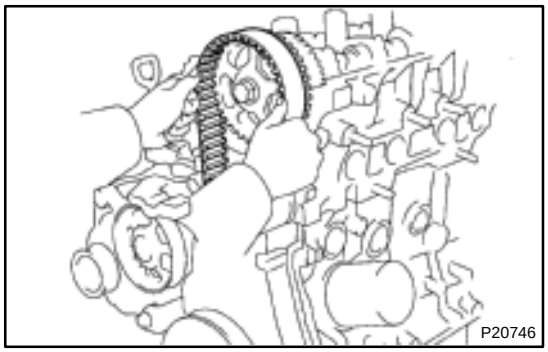

9. INSTALL TIMING BELT

(a) Starting from the right hand side of the pulley and installing the belt counterclockwise.

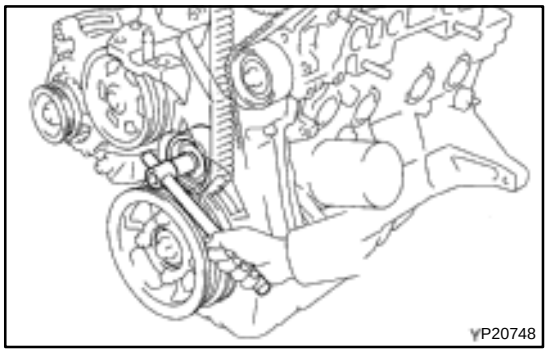

(b) Loosen the No.1 idler pulley mounting bolt until the pulley is moved slightly by the spring tension.

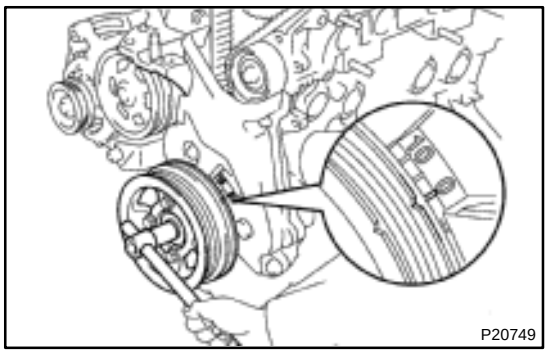

(c) Turn the crankshaft pulley 2 revolutions from TDC to TDC.

NOTICE:

Always turn the crankshaft clockwise.

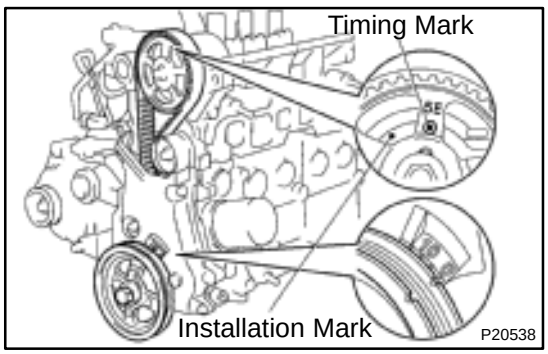

(d) Check that each pulley aligns with the timing marks as shown in the illustration.

If the timing marks do not align, remove the timing belt and reinstall it.

(e) Tighten the mounting bolt of the No.1 idler pulley.

Torque: 18.5 N·m (185 kgf·cm, 13 ft·lbf)

10. INSTALL NO.3 TIMING BELT COVER

11. INSTALL GENERATOR DRIVE BELT

(See page CH–2)

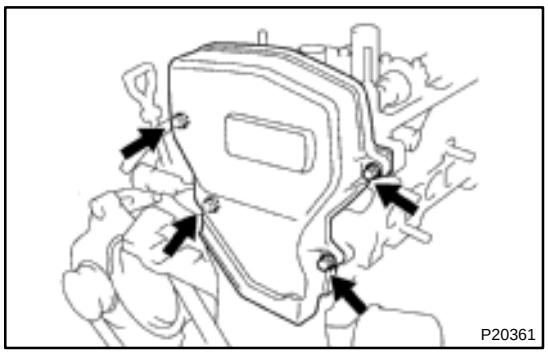

12. INSTALL NO.2 TIMING BELT COVER

(a) Install the gasket to the belt cover.

(b) Install the belt cover with the 4 bolts.

13. INSTALL CHARCOAL CANISTER

(See page EM–18)

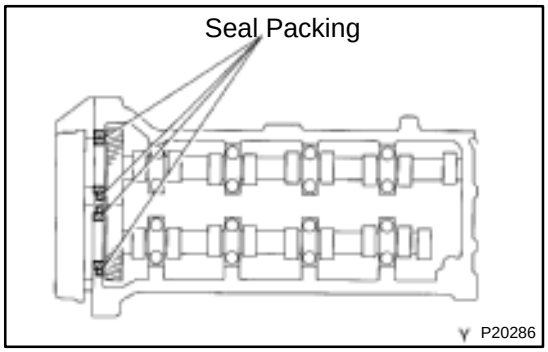

14. INSTALL CYLINDER HEAD COVER

(a) Apply seal packing to the cylinder head as shown in the illustration.

Seal packing:
Part No. 08826–00080 or equivalent

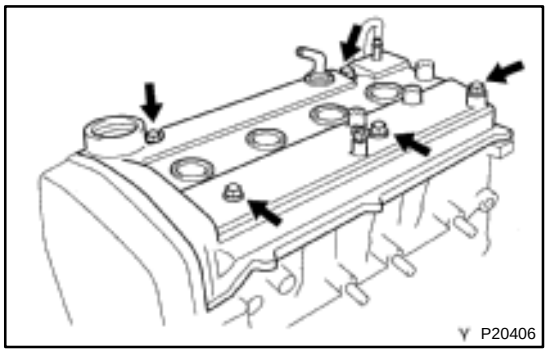

(b) Install the gasket to the cylinder head cover.

(c) Install the cylinder head cover with the 5 seal washers and nuts.

Torque: 7.0 N·m (70 kgf·cm, 61 in.·lbf)

(d) Install the oil filler cap.

15. INSTALL INTAKE MANIFOLD

(a) Install air pipe a new gasket and the intake manifold with the 2 bolts and 3 nuts.

Torque: 19.5 N·m (195 kgf·cm, 14 ft·lbf)

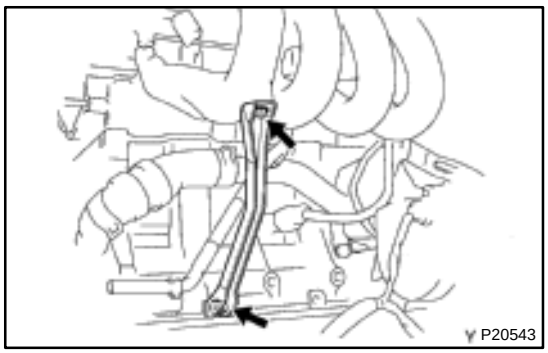

(b) Install the manifold stay with the bolt and nut.

Torque: 20 N·m (200 kgf·cm, 15 ft·lbf)

(c) Connect the engine wire clamps to the intake manifold stay.

16. CONNECT BRAKE BOOSTER AND MAP VACUUM HOSES

17. INSTALL INJECTORS AND DELIVERY PIPE

(See page SF–21)

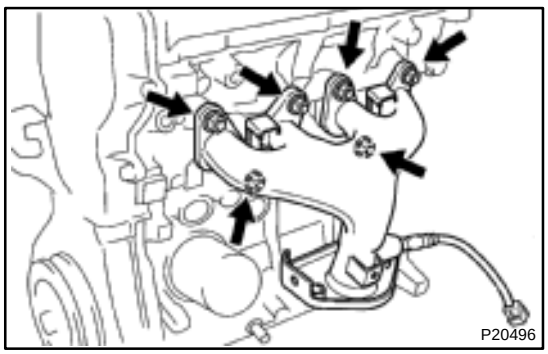

18. INSTALL EXHAUST MANIFOLD

(a) Install a new gasket and the exhaust manifold with the 6 nuts. Uniformly tighten the nuts in several passes.

Torque: 48 N·m (480 kgf·cm, 35 ft·lbf)

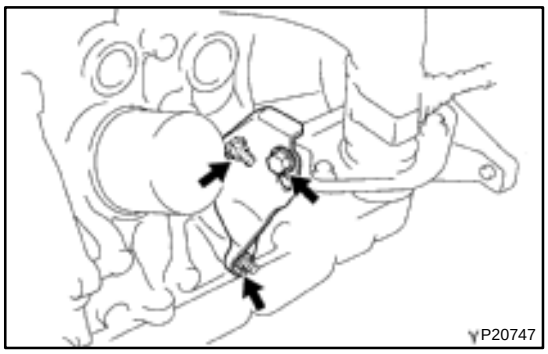

(b) Place the exhaust manifold stay snug against the cylinder block and exhaust manifold.

(c) First, tighten the bolt (A) and then the 2 nuts.
Torque: 40 N·m (400 kgf·cm, 29 ft·lbf)

(d) Install the heat insulator with the 3 bolts.
Torque: 8.0 N·m (80 kgf·cm, 69 in.·lbf)

19. INSTALL WATER INLET AND OUTLET HOUSING

(a) Remove any old packing (FIPG) material and be careful not to drop any oil on the contacting surfaces of the water outlet housing and cylinder head.

- Using a razor blade and gasket scraper, remove all the packing (FIPG) material from the gasket surfaces.
- Thoroughly clean all components to remove all the loose material.
- Clean both sealing surfaces with a non–residue solvent.

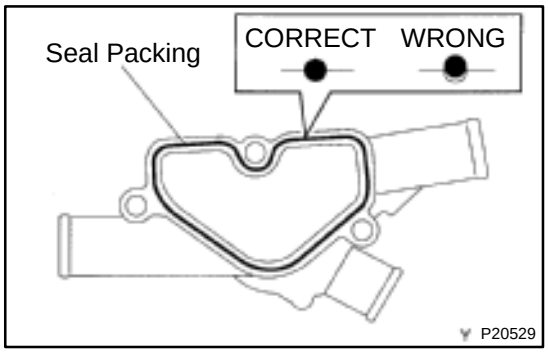

(b) Apply seal packing to the water outlet housing as shown in the illustration.
Seal packing:
Part No. 08826–00100, THREE BOND 1282B or equivalent

- Install a nozzle that has been cut to a 2 – 3 mm (0.08 – 0.12 in.) opening.

HINT:
Avoid applying an excess amount to the surface. Be especially careful near oil passages.

- Parts must be assembled within 15 minutes of application. Otherwise, the material must be removed and reapplied.
- Immediately remove nozzle from tube and reinstall cap.
- Do not pour in any coolant until at least 2 hours after installation is completed.

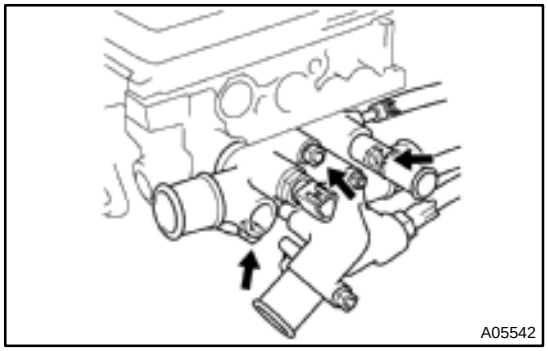

(c) Install the water outlet housing with the bolt and 2 nuts.
Torque: 17.5 N·m (175 kgf·cm, 13 ft·lbf)

(d) Connect these hoses:

- 2 radiator hoses
- Water inlet hose
- Heater outlet hose

(e) Connect these connectors:

- Engine coolant temperature sensor connector
- Fan engine coolant temperature switch connector

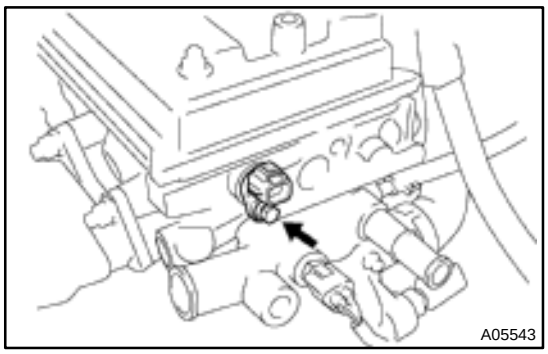

20. INSTALL CAMSHAFT POSITION SENSOR

(a) Install a new O–ring to the position sensor.

(b) Install the position sensor with the bolt.

Torque: 8.0 N·m (80 kgf·cm, 69 in.·lbf)

(c) Connect the position sensor connectors.

21. INSTALL THROTTLE BODY (See page SF–30)

22. INSTALL IGNITION COILS AND SPARK PLUGS

23. w/ A/C and w/o PS:
INSTALL IDLER PULLEY BRACKET

(a) Install the idler pulley bracket with the 3 bolts.

Torque:
12 mm head bolt
27 N·m (275 kgf·cm, 20 ft·lbf)
14 mm head bolt
37 N·m (375 kgf·cm, 27 ft·lbf)

(b) Install and adjust the drive belt (See page AC–16).

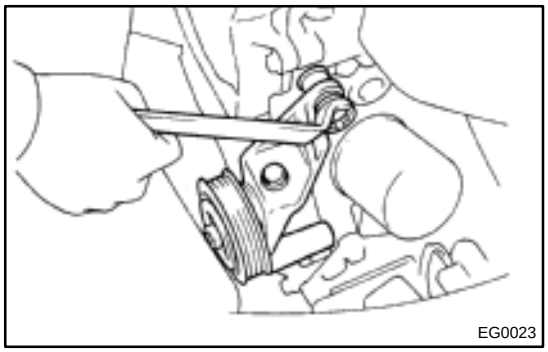

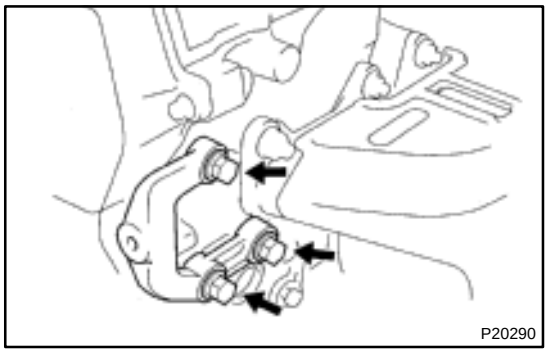

24. w/ PS:
INSTALL PS PUMP BRACKET AND PS PUMP

(a) Install the PS pump bracket with the 3 bolts.

Torque: 44 N·m (440 kgf·cm, 32 ft·lbf)

(b) Temporarily install the PS pump and drive belt with the 2 bolts (See page SR–29).

(c) Adjust the belt tension (See page SR–3).

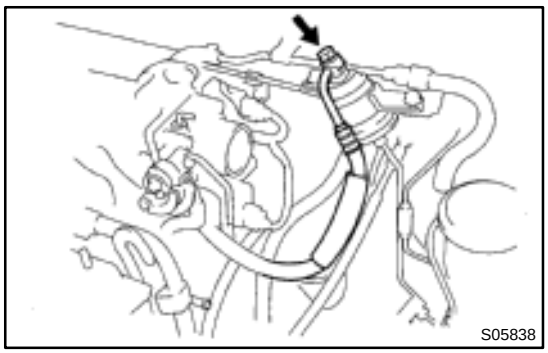

25. CONNECT FUEL HOSE

Connect the fuel inlet hose with the union bolt and 2 new gaskets.

Torque: 29 N·m (300 kgf·cm, 22 ft·lbf)

26. INSTALL AIR CLEANER ASSEMBLY WITH AIR INTAKE CONNECTOR

27. INSTALL VSV FOR EVAP CONNECTOR

28. INSTALL ACCELERATOR CABLE, AND ADJUST IT

29. A/T:
CONNECT THROTTLE CABLE, AND ADJUST IT

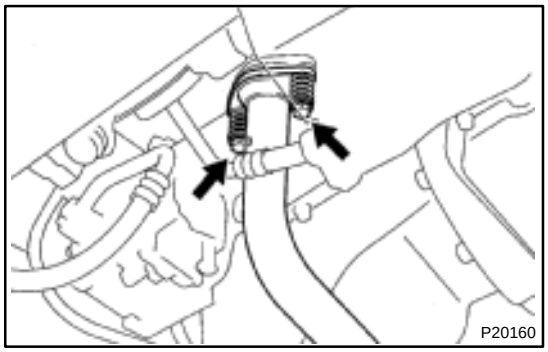

30. CONNECT FRONT EXHAUST PIPE

(a) Place a new gasket on the exhaust pipe.

(b) Connect the exhaust pipe to the exhaust manifold with the 2 compression spring and 2 bolts.

Torque: 62 N·m (630 kgf·cm, 46 ft·lbf)

31. INSTALL RH ENGINE UNDER COVER

32. FILL WITH ENGINE COOLANT
(See page CO–2)

33. START ENGINE AND CHECK FOR LEAKS

34. PERFORM ENGINE ADJUSTMENT

35. PERFORM ROAD TEST

Check for abnormal noise, shock, slippage, correct shift points and smooth operation.

36. RECHECK ENGINE COOLANT AND ENGINE OIL LEVELS

EM0K2–02

REASSEMBLY

HINT:

- Thoroughly clean all parts to be assembled.
- Before installing the parts, apply new engine oil to all sliding and rotating surfaces.
- Replace all gaskets and oil seals with new ones.

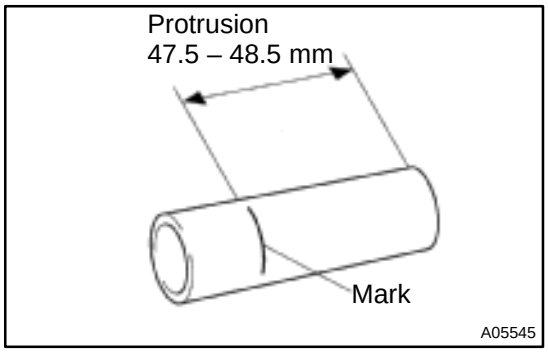

1. INSTALL SPARK PLUG TUBES

HINT:

When using a new cylinder head, spark plug tubes must be installed.

(a) Mark the standard position away from the edge, onto the spark plug tube.

Standard protrusion:
47.5 – 48.5 mm (1.870 – 1.909 in.)

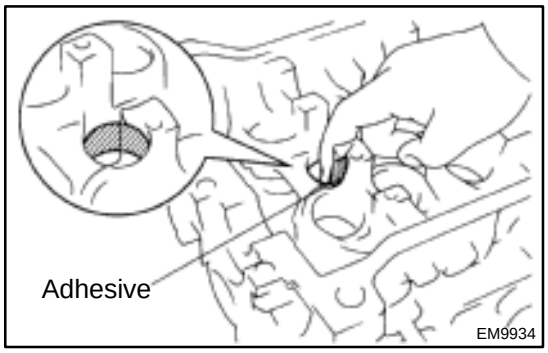

(b) Apply adhesive to the spark plug tube hole of the cylinder head.

Adhesive:
Part No. 08833–00070, Adhesive 1324,
THREE BOND 1324 or equivalent

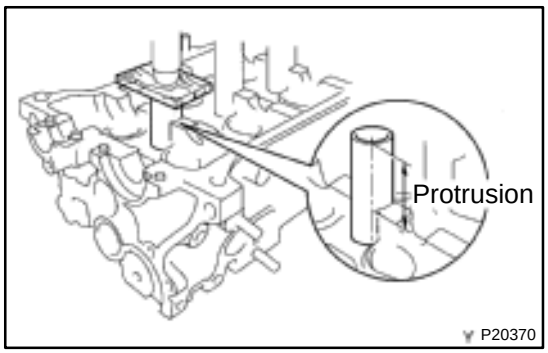

(c) Using a press, press in a new spark plug tube until there is standard protrusion protruding from the camshaft bearing cap installation surface of the cylinder head.

NOTICE:

Avoid pressing a new spark plug tube in too far by measuring the amount of protrusion while pressing.

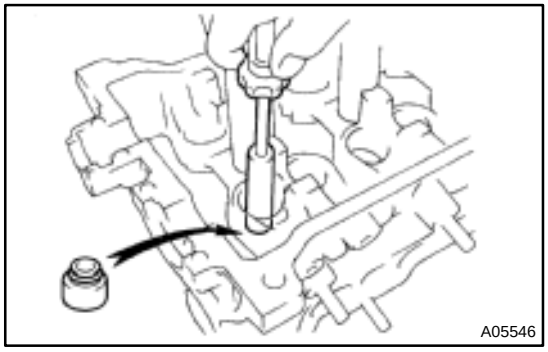

2. INSTALL VALVES

(a) Using a 10 mm socket–driver, push in a new oil seal.

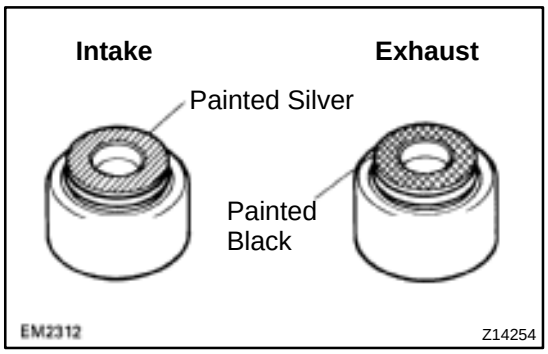

HINT:
The intake valve oil seal is silver and the exhaust valve oil seal is black.

(b) Install these parts:
  (1) Valve
  (2) Spring seat
  (3) Valve spring
  (4) Spring retainer

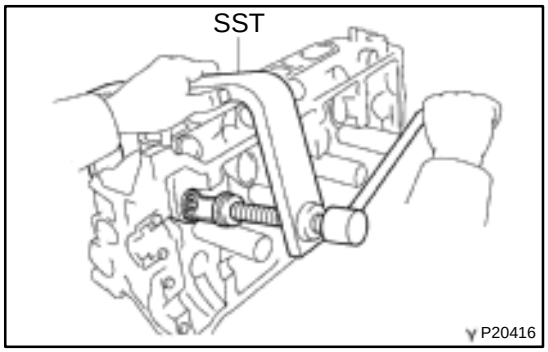

(c) Using SST, compress the valve spring and place the 2 keepers around the valve stem.
  SST 09202–70020

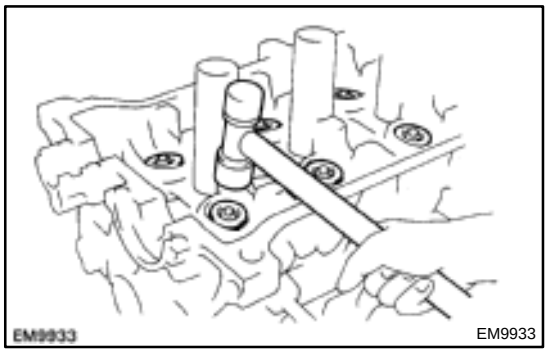

(d) Using a plastic–faced hammer, lightly tap the valve stem tip to assure proper fit.

3. INSTALL VALVE LIFTERS AND SHIMS

(a) Install the valve lifter and shim.

(b) Check that the valve lifter rotates smoothly by hand.

4. INSTALL STUD BOLT FOR CYLINDER HEAD COVER

5. INSTALL NO.2 ENGINE HANGER
Torque: 53 N·m (530 kgf·cm, 38 ft·lbf)

EM0JY–05

REMOVAL

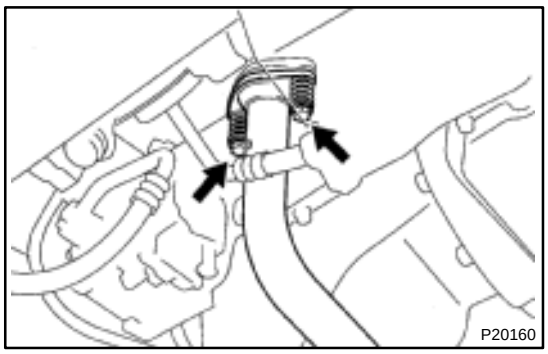

1. REMOVE RH ENGINE UNDER COVER

2. DRAIN ENGINE COOLANT

3. DISCONNECT FRONT EXHAUST PIPE

Remove the 2 bolts and 2 compression springs, and disconnect the front exhaust pipe.

4. A/T:
DISCONNECT THROTTLE CABLE

5. DISCONNECT ACCELERATOR CABLE

6. DISCONNECT VSV FOR EVAP CONNECTOR AND BRACKET

7. REMOVE AIR CLEANER ASSEMBLY WITH AIR INTAKE CONNECTOR

8. DISCONNECT FUEL HOSE

Remove the union bolt and gaskets, and disconnect the fuel inlet hose.

NOTICE:
Catch leaking fuel in a container.

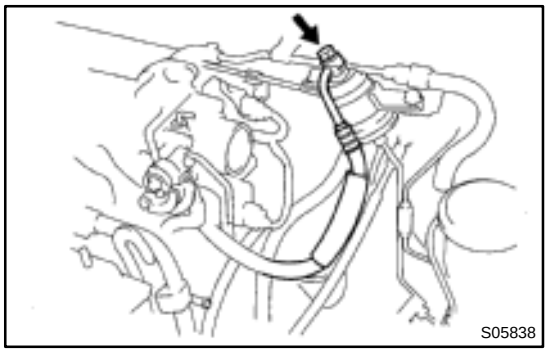

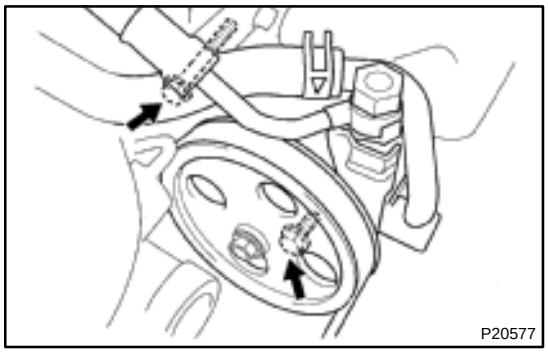

9. w/ PS:
REMOVE PS PUMP AND PUMP BRACKET WITHOUT DISCONNECTING HOSES

(a) Loosen the 2 bolts, and remove the PS drive belt.

(b) Remove the 2 bolts, and disconnect the PS pump from the engine.

HINT:
Put aside the PS pump, and suspend it.

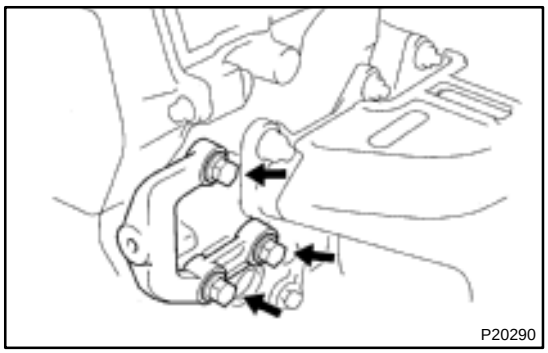

(c) Remove the 3 bolts and PS pump bracket.

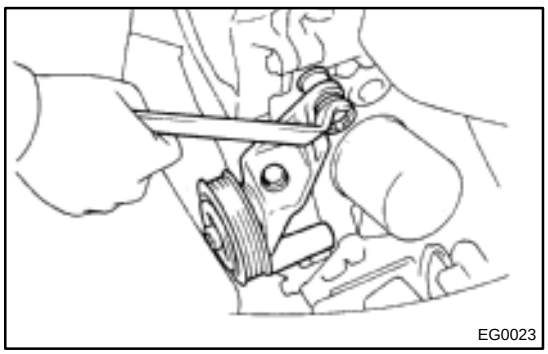

10. w/ A/C and w/o PS:
REMOVE IDLER PULLEY BRACKET

(a) Loosen the idler pulley mounting nut and adjusting bolt, and remove the drive belt.

(b) Remove the 3 bolts and idler pulley bracket.

11. REMOVE IGNITION COILS AND SPARK PLUGS

12. REMOVE THROTTLE BODY
(See page SF–27)

13. REMOVE CAMSHAFT POSITION SENSOR
(See page IG–10)

14. REMOVE WATER INLET AND OUTLET HOUSING

(a) Disconnect these connectors:
- Engine coolant temperature sender gauge connector
- Engine coolant temperature sensor connector
- Fan engine coolant temperature switch connector

(b) Disconnect these hoses:
- 2 radiator hoses
- Water inlet hose
- Heater outlet hose

(c) Remove the bolt, 2 nuts, the water inlet and outlet housing.

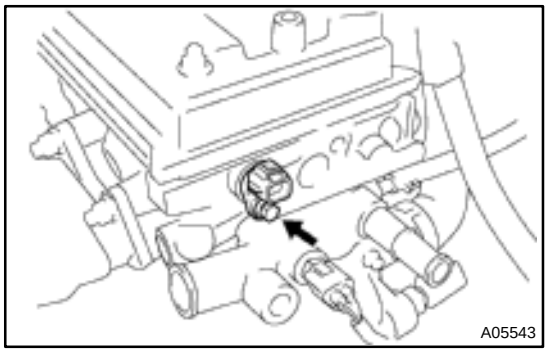

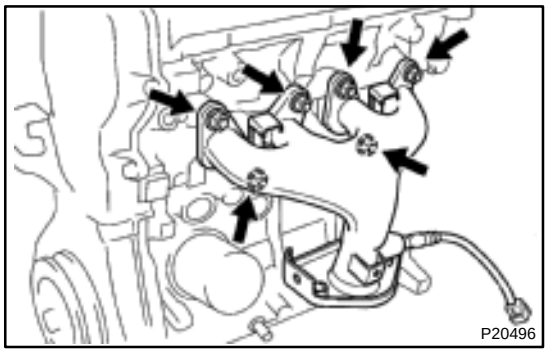

15. REMOVE EXHAUST MANIFOLD

(a) Remove the 3 bolts and heat insulator.

(b) Remove the bolt, 2 nuts and exhaust manifold stay.

(c) Remove the 6 nuts, exhaust manifold and gasket.

16. REMOVE DELIVERY PIPE AND INJECTORS
(See page SF–18)

17. DISCONNECT BRAKE BOOSTER AND MAP VACUUM HOSES

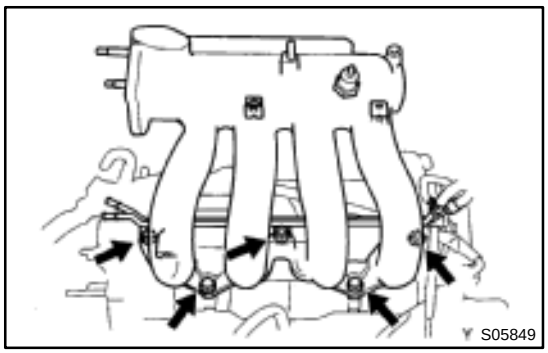

18. REMOVE INTAKE MANIFOLD

(a) Disconnect the engine wire clamps from the intake manifold stay.

(b) Remove the bolt, nut and intake manifold stay.

(c) Remove the 2 bolts, 3 nuts, intake manifold and gasket with air pipe.

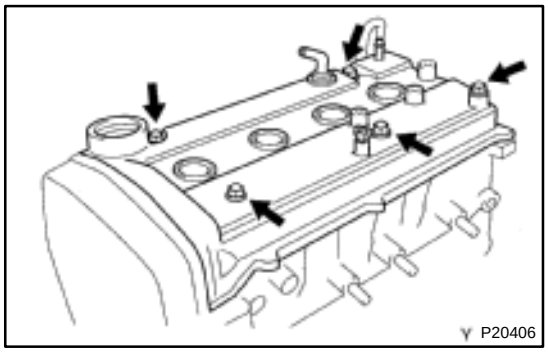

19. REMOVE CYLINDER HEAD COVER

(a) Remove the oil filler cap.

(b) Remove the 5 cap nuts and seal washers.

(c) Pry out the cylinder head cover, and remove the cover and gasket.

20. REMOVE CHARCOAL CANISTER
(See page EM–13)

21. REMOVE NO.2 TIMING BELT COVER

Remove the 4 bolts, No.2 timing belt cover and gasket.

22. REMOVE GENERATOR DRIVE BELT

Loosen the pivot nut and adjusting bolt, and remove the generator drive belt.

23. REMOVE NO.3 TIMING BELT COVER FROM NO.1 TIMING BELT COVER

24. SET NO.1 CYLINDER TO TDC/COMPRESSION (See page EM–13)

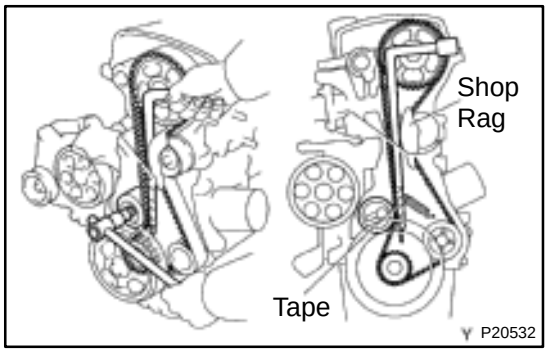

25. REMOVE TIMING BELT FROM CAMSHAFT TIMING PULLEY

(a) Loosen the mount bolt of the No.1 idler pulley and shift pulley toward the left as far as it will go and then temporarily tighten it.

NOTICE:

Be careful not to damage the timing belt.

(b) Remove the timing belt from the camshaft timing pulley.

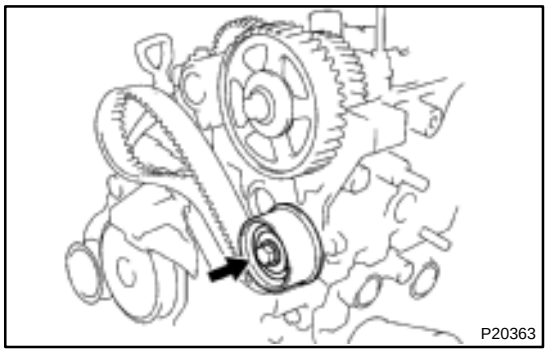

26. REMOVE NO.2 IDLER PULLEY

Remove the bolt and idler pulley.

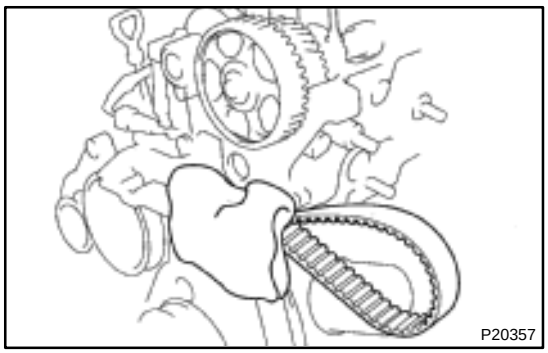

NOTICE:

- **Support the timing belt, so the meshing of the crankshaft timing pulley and timing belt does not shift.**
- **Be careful not to drop anything inside the timing belt cover.**
- **Do not allow the belt to come into contact with oil, water or duct.**

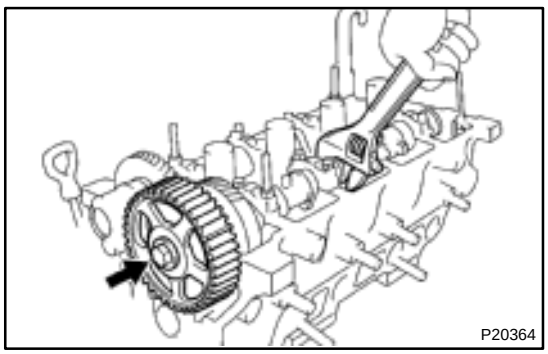

27. REMOVE CAMSHAFT TIMING PULLEY

Secure the hexagonal portion of the camshaft, and remove the bolt and pulley.

28. REMOVE INTAKE AND EXHAUST CAMSHAFTS

NOTICE:

Since the thrust clearance of the camshaft is small, the camshaft must be held level while it is being removed. If the camshaft is not kept level, the portion of the cylinder head receiving the shaft thrust may crack or be damaged, causing the camshaft to seize or break. To avoid this, the following steps should be carried out.

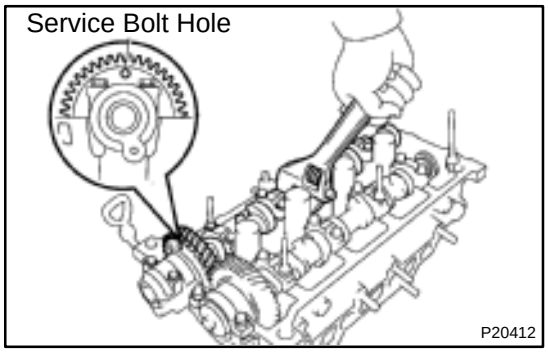

(a) Set the intake camshaft as shown in the illustration so that the service bolt holes of the intake camshaft gears are directly above.

HINT:

This helps to lift the exhaust camshaft levelly and evenly by pushing No.2 and No.4 cylinder cam lobes of the intake camshaft toward their valve lifters.

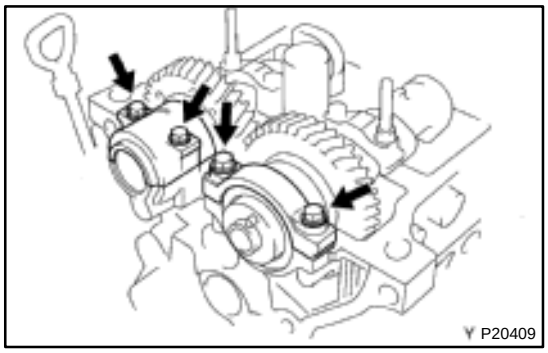

(b) Remove the 4 bolts, No.1 and No.2 bearing caps.

(c) Remove the oil seal and housing plug.

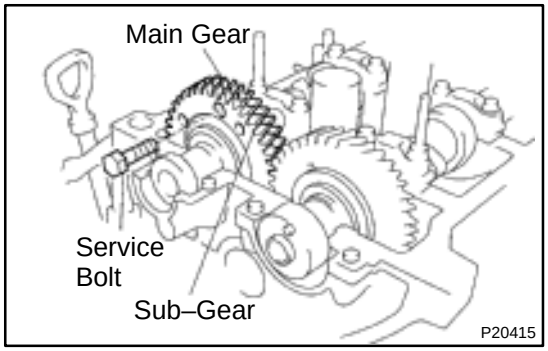

(d) Secure the intake camshaft sub–gear to the main gear with a service bolt.

Recommended service bolt:

Thread diameter	6 mm
Thread pitch	1.0 mm
Bolt length	16 – 20 mm (0.63 – 0.79 in.)

HINT:

When removing the camshaft, make sure that the torsional spring force of the sub–gear has been eliminated by the above operation.

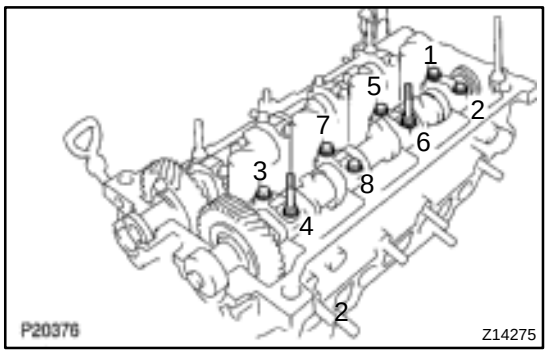

(e) Uniformly loosen and remove the 8 No.3 bearing cap bolts, in several passes, in the sequence shown.
(f) Remove the 4 bearing caps and exhaust camshaft.

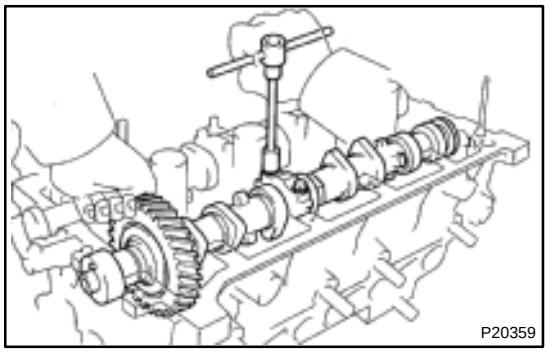

HINT:
If the camshaft is not being lifted out straight and level, reinstall the bearing cap with the 2 bolts.
Then alternately loosen and remove the bearing cap bolts with the camshaft gear pulled up.
NOTICE:
Do not pry on or attempt to force the camshaft with a tool or other object.

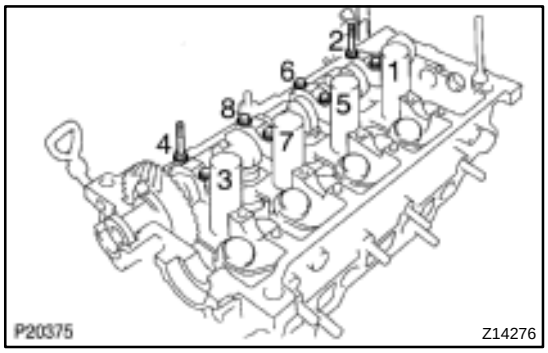

(g) Uniformly loosen and remove the 8 No.3 bearing cap bolts, in several passes, in the sequence shown.
(h) Remove the 4 bearing caps and intake camshaft.

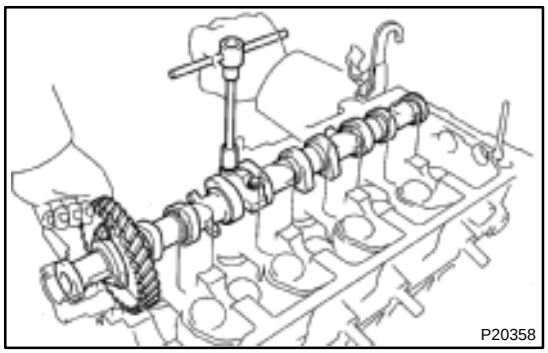

HINT:
If the camshaft is not being lifted out straight and level, reinstall the bearing cap with the 2 bolts.
Then alternately loosen and remove the 2 bearing cap bolts with the camshaft gear pulled up.
NOTICE:
Do not pry on or attempt to force the camshaft with a tool or other object.

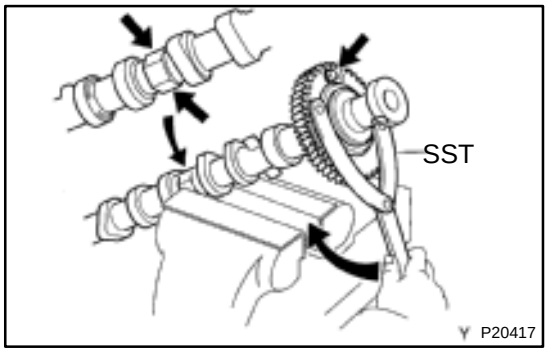

29. DISASSEMBLE INTAKE CAMSHAFT
(a) Mount the hexagon head portion of the camshaft in a soft jaw vise.
NOTICE:
Be careful not to damage the camshaft.
(b) Using SST, turn the sub–gear clockwise, and remove the service bolt.
SST 09960–10010 (09962–01000, 09963–00500)

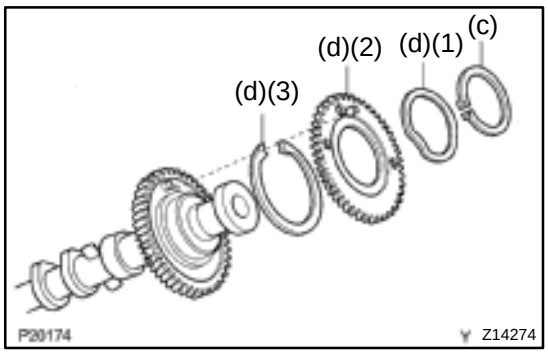

(c) Using snap ring pliers, remove the snap ring.
(d) Remove these parts:
  (1) Wave washer
  (2) Camshaft sub–gear
  (3) Camshaft gear spring

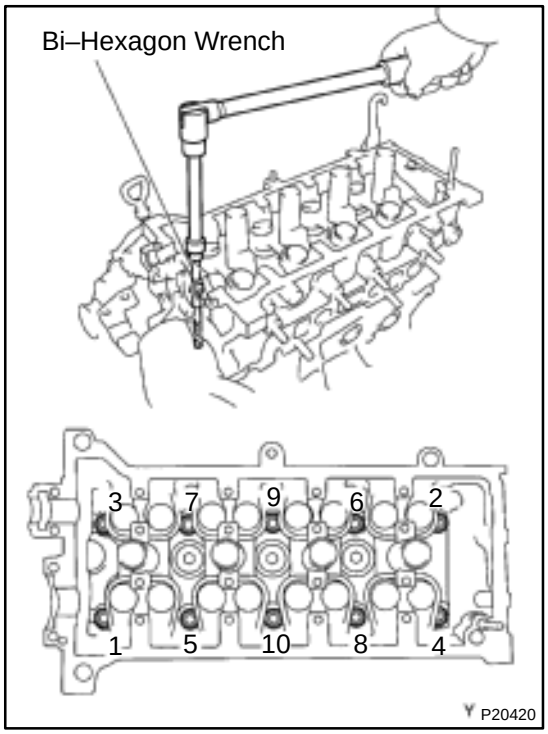

30. REMOVE CYLINDER HEAD

(a) Using a bi–hexagon wrench 8 mm, uniformly loosen and remove the 10 cylinder head bolts, in several passes, in the sequence shown.

NOTICE:

Cylinder head warpage or cracking could result from removing bolts in incorrect order.

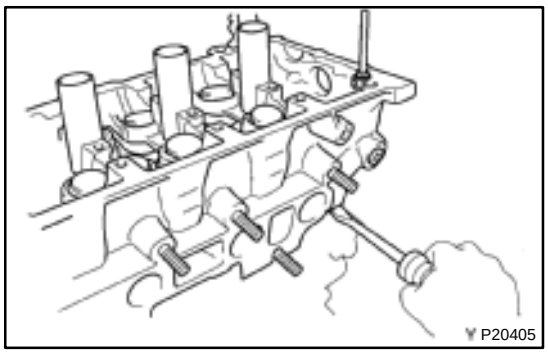

(b) Lift the cylinder head from the dowels on the cylinder block and place the head on wooden blocks on a bench.

HINT:

If the cylinder head is difficult to lift off, pry with a screwdriver between the cylinder head and block saliences.

NOTICE:

Be careful not to damage the contact surfaces of the cylinder head and cylinder block.

EM0K1–01

REPLACEMENT

REPLACE VALVE GUIDE BUSHINGS

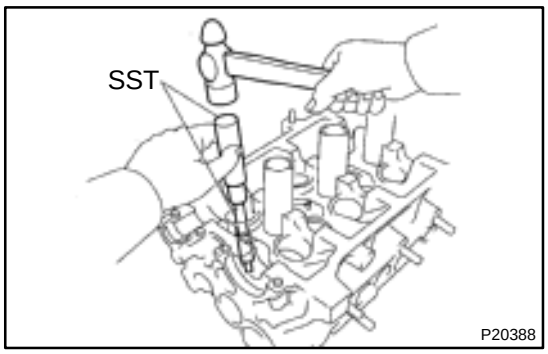

(a) Using SST and a hammer, tap out the guide bushing.
SST 09201–10000 (09201–01060),
09550–10012 (09252–10010)

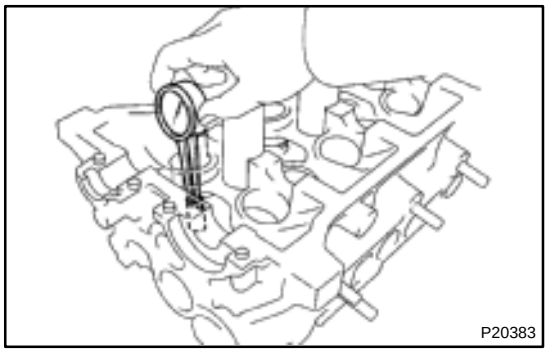

(b) Using a caliper gauge, measure the bushing bore diameter of the cylinder head.

Both intake and exhaust

Bushing bore diameter mm (in.)	Bushing size
11.000 – 11.027 (0.4331 – 0.4342)	Use STD
11.050 – 11.077 (0.4350 – 0.4361)	Use O/S 0.05

(c) Select a new guide bushing (STD size or O/S 0.05).
If the bushing bore diameter of the cylinder head is greater than 11.027 mm (0.4341 in.), machine the bushing bore to the following dimension:

11.050 – 11.077 mm (0.4350 – 0.4361 in.)

If the bushing bore diameter of the cylinder head is greater than 11.077 mm (0.4361 in.), replace the cylinder head.

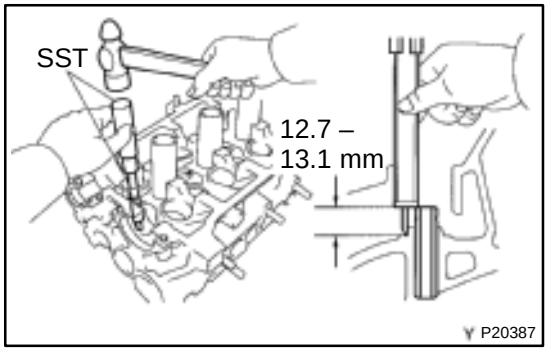

(d) Using SST and a hammer, tap in a new guide bushing to where there is 12.7 – 13.1 mm (0.500 – 0.510 in.) left protruding from the cylinder head.
SST 09201–10000 (09201–01060)
09550–10012 (09252–10010)

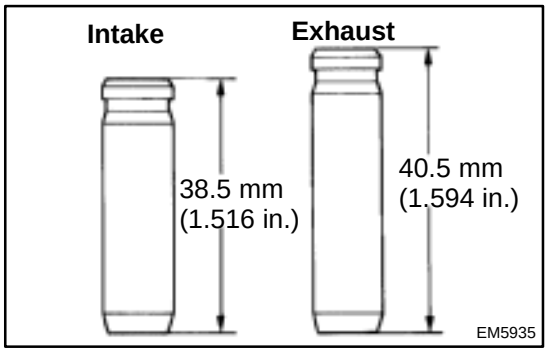

HINT:
Different bushings are used for the intake and exhaust.

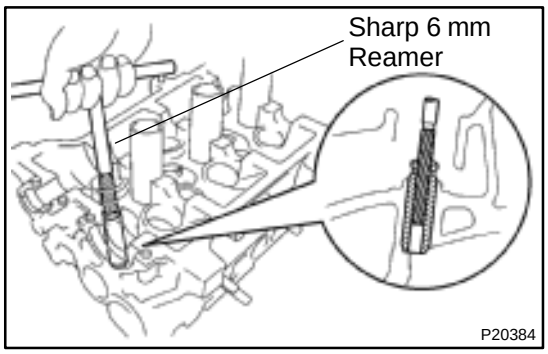

(e) Using a sharp 6 mm reamer, ream the guide bushing to obtain the standard specified clearance (See page EM–31) between the guide bushing and valve stem.

ENGINE UNIT

COMPONENTS

EM0JU–05

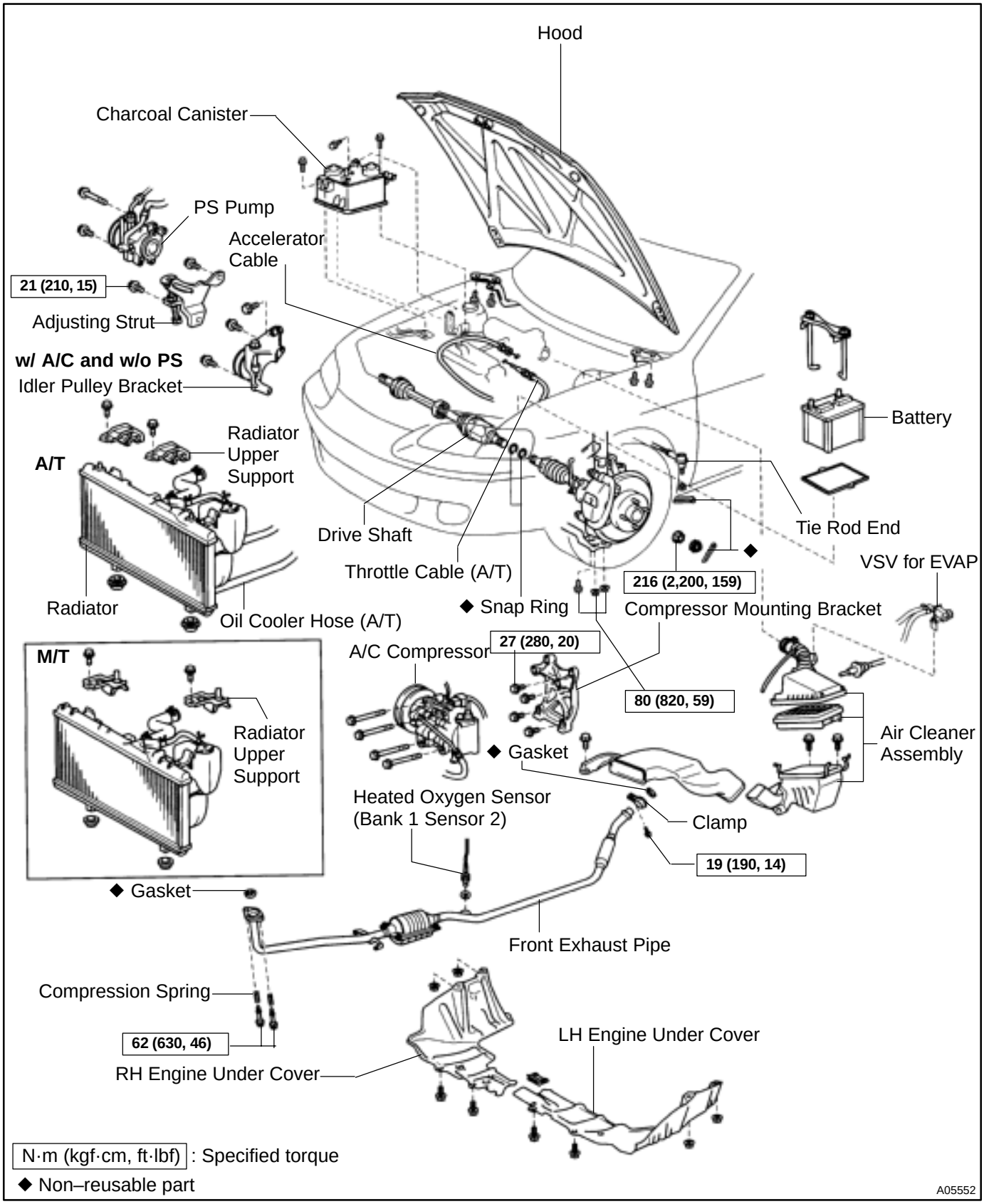

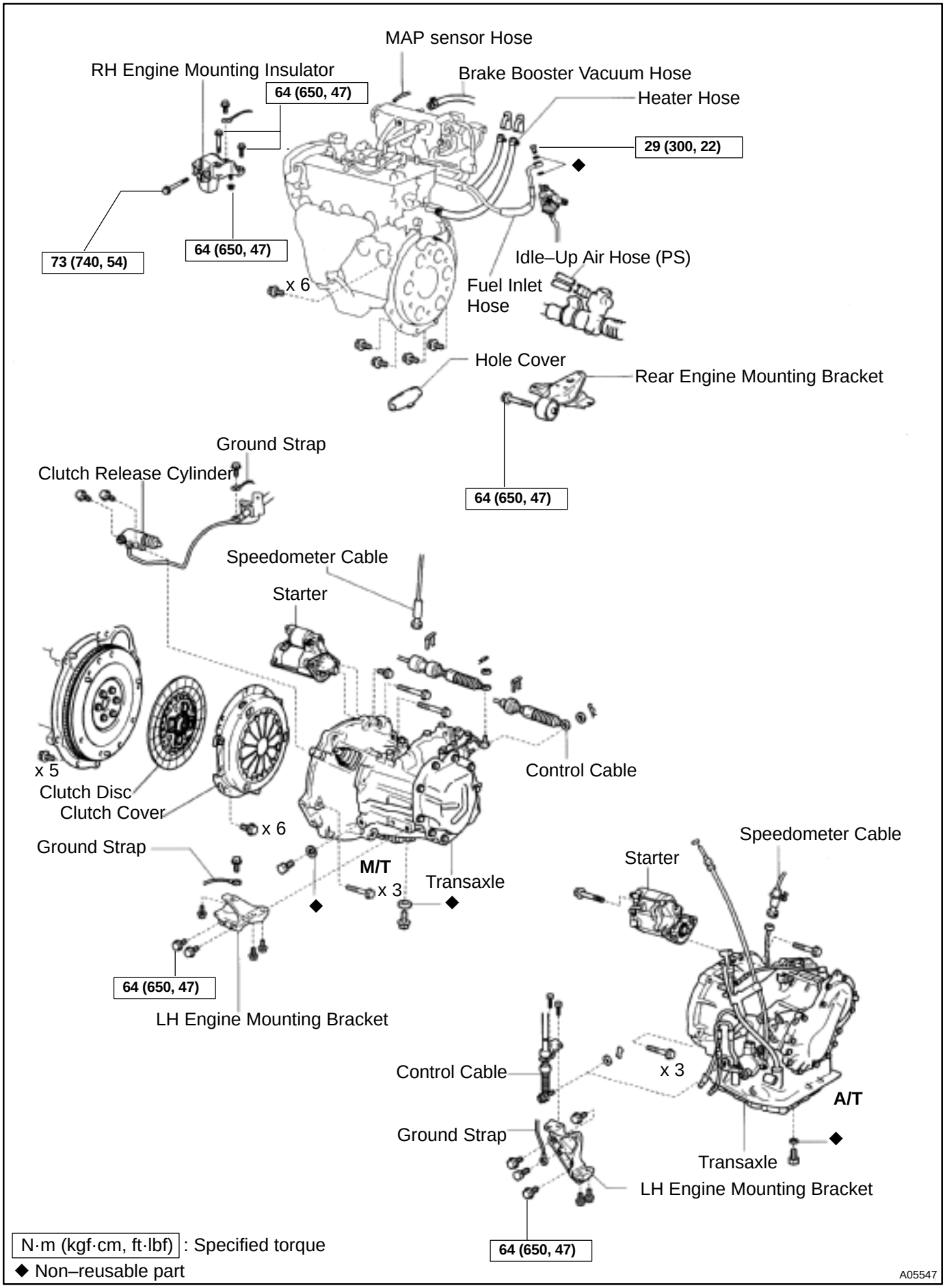
MAP sensor Hose
RH Engine Mounting Insulator
64 (650, 47)
Brake Booster Vacuum Hose
Heater Hose
29 (300, 22)
73 (740, 54)
64 (650, 47)
x 6
Idle–Up Air Hose (PS)
Fuel Inlet Hose
Hole Cover
Rear Engine Mounting Bracket
64 (650, 47)
Ground Strap
Clutch Release Cylinder
Speedometer Cable
Starter
x 5
Clutch Disc
Clutch Cover
x 6
Control Cable
Ground Strap
M/T
x 3
Transaxle
64 (650, 47)
LH Engine Mounting Bracket
Speedometer Cable
Starter
Control Cable
x 3
A/T
Ground Strap
Transaxle
LH Engine Mounting Bracket
64 (650, 47)
N·m (kgf·cm, ft·lbf) : Specified torque
◆ Non–reusable part
A05547

EM0KF–02

INSTALLATION

1. ASSEMBLE ENGINE AND TRANSAXLE
M/T: (See page MX–3)
A/T: (See page DI–126)

2. INSTALL STARTER
(See page ST–15 or ST–32)

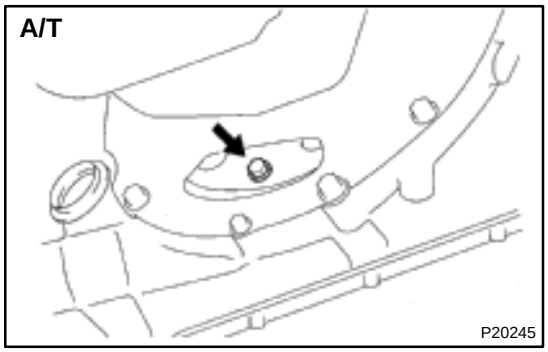

3. A/T:
INSTALL TORQUE CONVERTER CLUTCH MOUNTING BOLTS

(a) First, install the gray bolt and then 5 bolts.
(b) Tighten the bolts evenly.
Torque: 27 N·m (280 kgf·cm, 20 ft·lbf)
(c) Install the engine rear end plate hole cover.

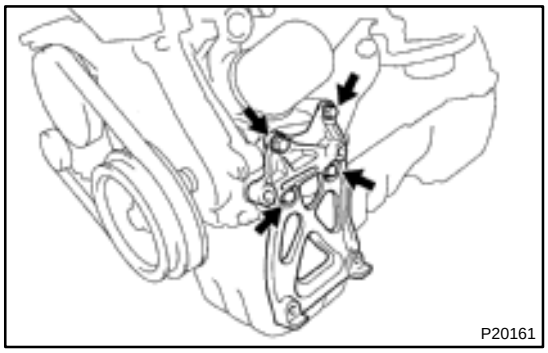

4. w/ A/C:
INSTALL A/C COMPRESSOR MOUNTING BRACKET

Install the compressor mounting bracket with the 4 bolts.
Torque: 27 N·m (280 kgf·cm, 20 ft·lbf)

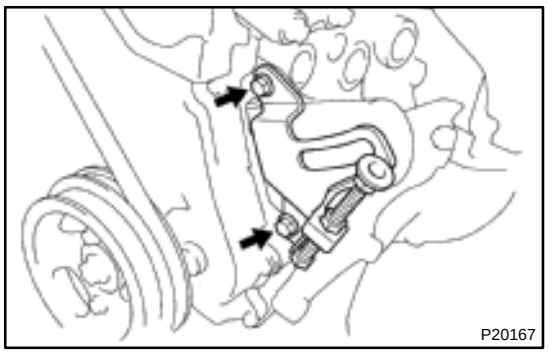

5. w/ PS:
INSTALL PS PUMP ADJUSTING STRUT

Install the PS pump adjusting strut with the 2 bolts.
Torque: 21 N·m (210 kgf·cm, 15 ft·lbf)

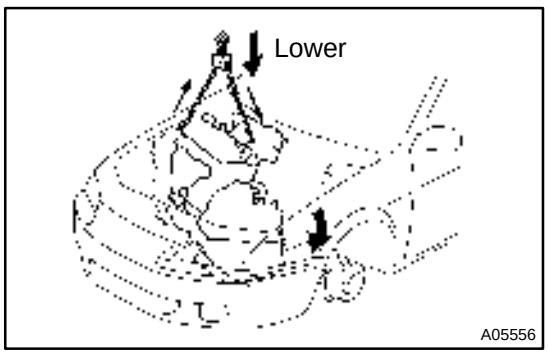

6. INSTALL ENGINE AND TRANSAXLE ASSEMBLY IN VEHICLE

(a) Attach the engine sling device to the engine hangers.
(b) Lower the engine into the engine compartment.
Tilt the transaxle downward, lower the engine and clear the LH engine mounting.

NOTICE:
Be careful not to hit the PS gear housing, park/neutral position switch and throttle position switch.

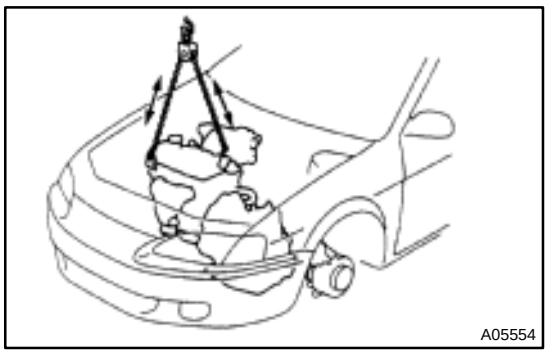

(c) Keep the engine level, and align RH and LH engine mountings with the body bracket.

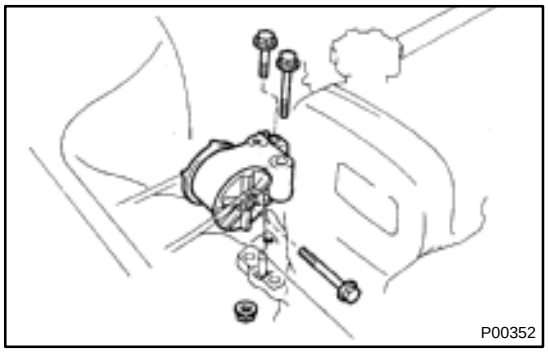

(d) Attach the RH engine mounting insulator to the mounting bracket and body, and temporarily install the through bolt, 2 bolts and nut.

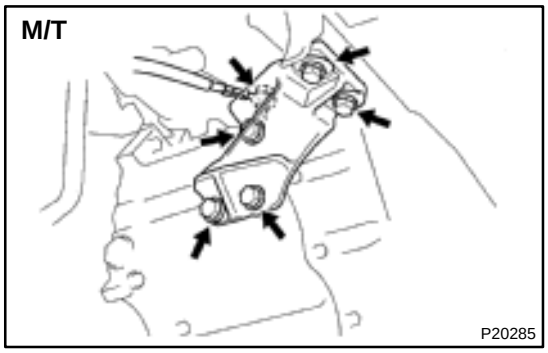

(e) Install the LH engine mounting bracket to the transaxle and mounting insulator with the 5 bolts. Torque the bolts.
Torque:
Bracket to transaxle (bolt head: NT)
64 N·m (650 kgf·cm, 47 ft·lbf)
Bracket to insulator (bolt head: 7T)
49 N·m (490 kgf·cm, 35 ft·lbf)

(f) Connect the ground strap with the bolt.
Torque: 49 N·m (490 kgf·cm, 35 ft·lbf)

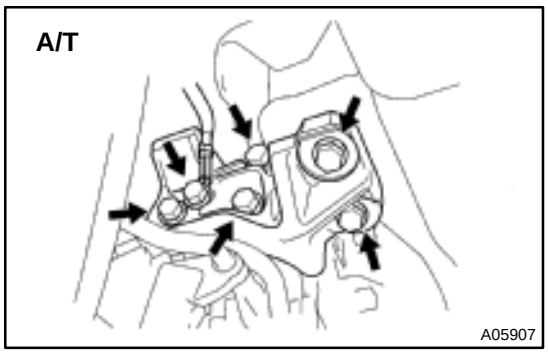

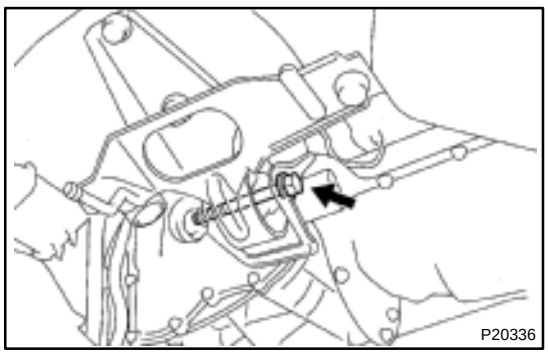

(g) Install and torque the rear engine mounting insulator through bolt.
Torque: 64 N·m (650 kgf·cm, 47 ft·lbf)

(h) Remove the engine sling device from the engine.

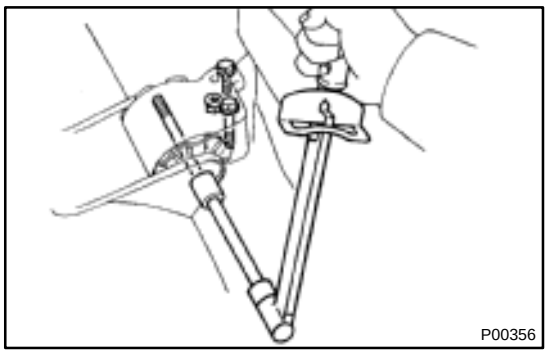

(i) Torque the 2 bolts, nut and through bolt of the RH mounting insulator.
Torque:
Bolt and nut
64 N·m (650 kgf·cm, 47 ft·lbf)
Through bolt
73 N·m (740 kgf·cm, 54 ft·lbf)
(j) Connect the ground strap with the bolt.
(k) Install charcoal canister (See page EM–18).

7. INSTALL DRIVE SHAFTS
(See page SA–18)

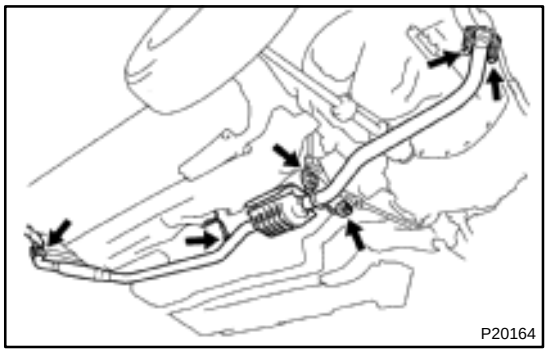

8. INSTALL FRONT EXHAUST PIPE
(a) Connect the 2 rings to the front exhaust pipe.
(b) Place a new gasket on the exhaust pipe.
(c) Connect the exhaust pipe to the exhaust manifold with 2 compression springs and 2 bolts.
Torque: 62 N·m (630 kgf·cm, 46 ft·lbf)
(d) Install the exhaust pipe to the tail pipe with the clamp.
Torque: 19 N·m (190 kgf·cm, 14 ft·lbf)
(e) Install the heated oxygen sensor.
Torque: 44 N·m (450 kgf·cm, 33 ft·lbf)

HINT:
- Before installing the heated oxygen sensor, twist the sensor wire counterclockwise 3 and 1/2 turns.
- After installing the heated oxygen sensor, check that the sensor wire is not twisted. If it is twisted, remove the heated oxygen sensor and reinstall it.

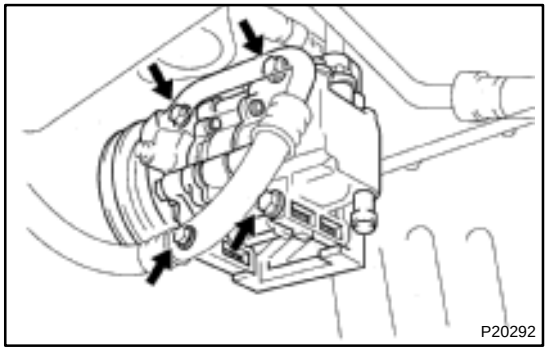

9. w/ A/C:
INSTALL A/C COMPRESSOR
(a) Install the A/C compressor to the bracket with the 4 bolts.
Torque: 25 N·m (250 kgf·cm, 18 ft·lbf)
(b) Connect A/C compressor connector.

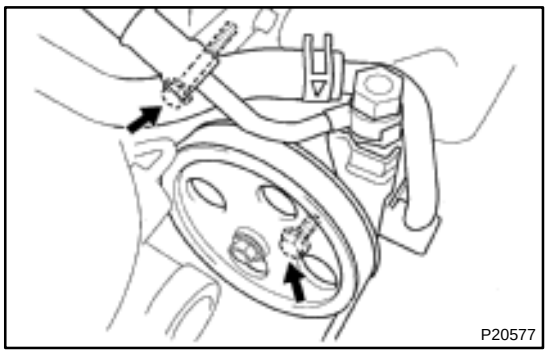

10. w/ PS:
INSTALL PS PUMP

(a) Install the PS pump and drive belt with the 2 bolts.
(b) Adjust the drive belt tension (See page SR–3).

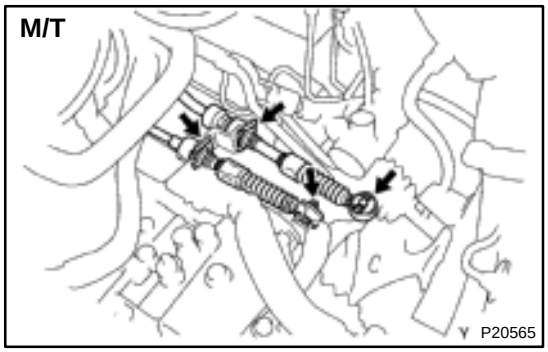

11. M/T:
CONNECT CONTROL CABLE(S) TO TRANSAXLE

(a) Install the cables with the retainers.
(b) Connect the linkages with the plate washers and clips.

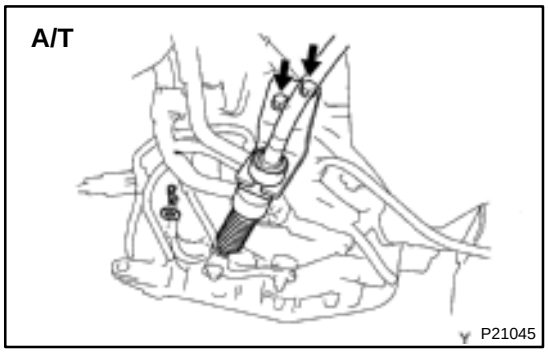

12. A/T:
CONNECT CONTROL CABLE(S) TO TRANSAXLE

(a) Install the support bracket to the LH engine mounting bracket with the 2 bolts.
(b) Connect the linkage with the plate washer and clip.

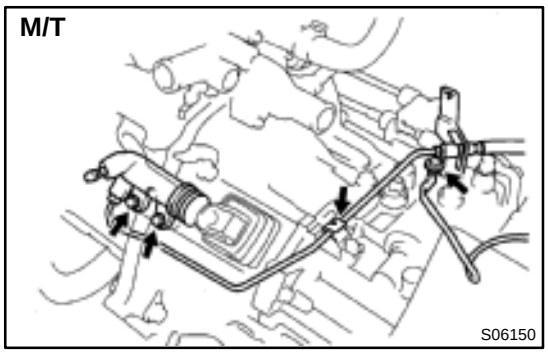

13. M/T:
INSTALL CLUTCH RELEASE CYLINDER

Install the release cylinder, tube and ground strap with the 3 bolts.

Torque: 12 N·m (120 kgf·cm, 9 ft·lbf)

14. CONNECT ENGINE WIRE HARNESS

Connect these connectors and wires:

- Oxygen sensor connector
- Oil pressure switch connector
- Engine coolant temperature sender gauge connector
- Engine coolant temperature sensor connector
- Camshaft position sensor connector
- Fan engine coolant temperature switch connector
- A/T only:
  Lock–up solenoid connector
- A/T only:
  Park/Neutral position switch connector

- M/T only:
  Backup light switch connector
- A/T only:
  No.2 vehicle speed sensor connector
- Ground strap
- Throttle position sensor connector
- IAC valve connector
- Injector connectors
- Crankshaft position sensor connector
- Knock sensor connector
- Starter connector and wire
- Generator connector and wire

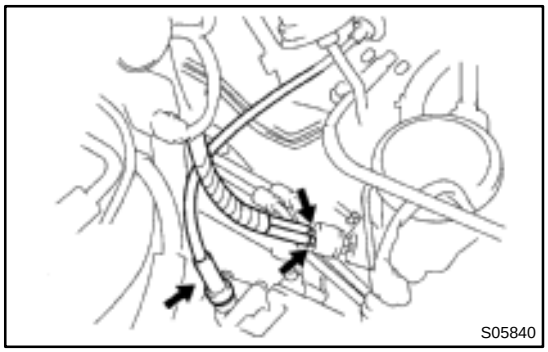
S05840

15. w/ PS:
CONNECT IDLE–UP AIR HOSES TO AIR CONTROL VALVE

16. CONNECT SPEEDOMETER CABLE

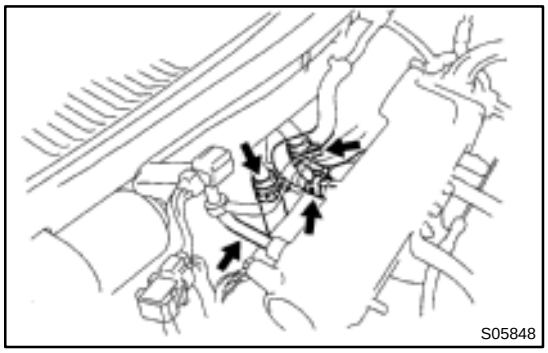
S05848

17. CONNECT HOSES

Connect these hoses:

(1) Brake booster vacuum hose
(2) MAP sensor hose
(3) Heater hoses

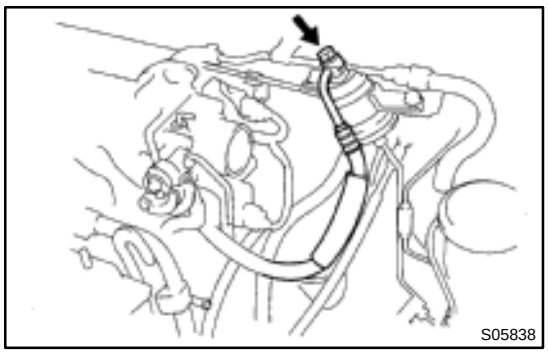
S05838

18. CONNECT FUEL HOSE

Connect the fuel inlet hose with the union bolt and 2 new gaskets.

Torque: 29.5 N·m (300 kgf·cm, 22 ft·lbf)

19. CONNECT ACCELERATOR CABLE, AND ADJUST IT
20. INSTALL RADIATOR (See page CO–21)
21. INSTALL AIR CLEANER ASSEMBLY WITH AIR INTAKE CONNECTOR
22. FILL WITH TRANSAXLE OIL (FLUID)
23. FILL WITH ENGINE COOLANT
24. INSTALL ENGINE UNDER COVERS
25. INSTALL HOOD
26. START ENGINE AND CHECK FOR LEAKS
27. PERFORM ENGINE ADJUSTMENT
28. PERFORM ROAD TEST

Check for abnormal noise, shock, slippage, correct shift points and smooth operation.

29. RECHECK ENGINE COOLANT AND ENGINE OIL LEVELS

EM0KE–02

REMOVAL

1. **REMOVE BATTERY**
2. **REMOVE HOOD**
3. **REMOVE ENGINE UNDER COVERS**
4. **DRAIN ENGINE COOLANT**
5. **DRAIN TRANSAXLE OIL (FLUID)**
6. **DISCONNECT VSV FOR EVAP BRACKET**
7. **REMOVE AIR CLEANER ASSEMBLY WITH AIR INTAKE CONNECTOR**
8. **REMOVE RADIATOR**
   (See page CO–16)
9. **DISCONNECT ACCELERATOR CABLE**

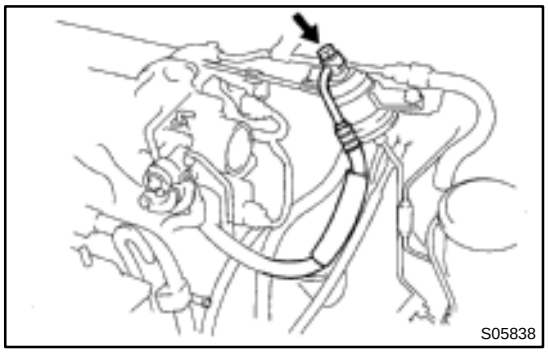
S05838

10. DISCONNECT FUEL HOSE

Remove the union bolt and gaskets, and disconnect the fuel inlet hose.

NOTICE:

Catch leaking fuel in a container.

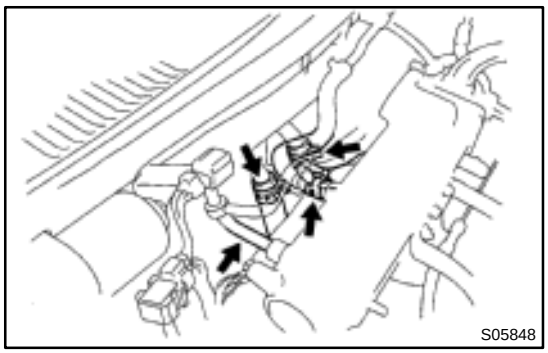
S05848

11. DISCONNECT HOSES

Disconnect these hoses:

- Brake booster vacuum hose
- MAP sensor hose
- Heater hoses

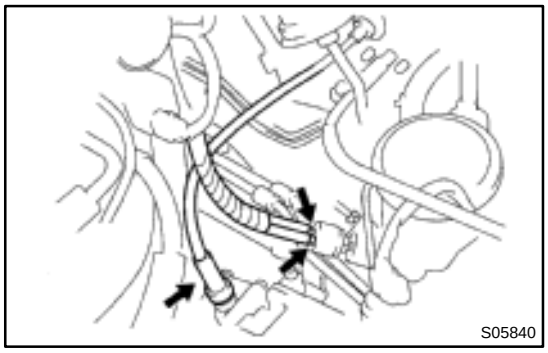
S05840

12. DISCONNECT SPEEDOMETER CABLE FROM TRANSAXLE

13. w/ PS:
DISCONNECT IDLE–UP AIR HOSES FROM AIR CONTROL VALVE

14. DISCONNECT ENGINE WIRE HARNESS

Disconnect these connectors and wires:

- Oxygen sensor connector
- Oil pressure switch connector

- Engine coolant temperature sender gauge connector
- Engine coolant temperature sensor connector
- Camshaft position sensor connector
- Fan engine coolant temperature switch connector
- A/T only:
  Lock–up solenoid connector
- A/T only:
  Park/Neutral position switch connector
- M/T only:
  Backup light switch connector
- A/T only:
  No.2 vehicle speed sensor connector
- Ground strap
- Throttle position sensor connector
- IAC valve connector
- Injector connectors
- Crankshaft position sensor connector
- Knock sensor connector
- Starter connector and wire
- Generator connector and wire

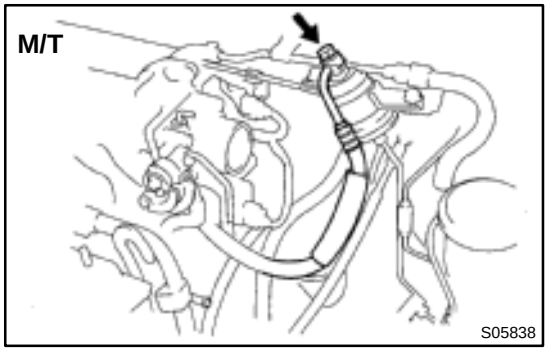

15. M/T:
REMOVE CLUTCH RELEASE CYLINDER WITHOUT DISCONNECTING TUBE

(a) Remove the 3 bolts, release cylinder and tube from the transaxle.
(b) Disconnect the ground strap.

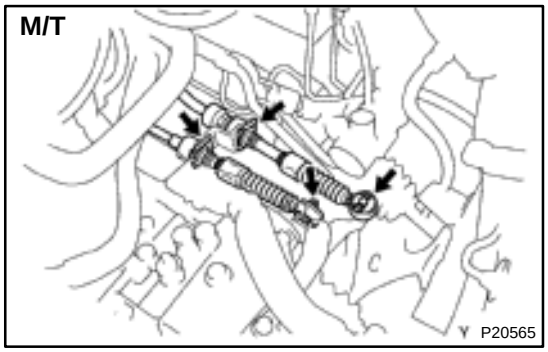

16. M/T:
DISCONNECT CONTROL CABLE(S) FROM TRANSAXLE

(a) Remove the clips, plate washers and retainers.
(b) Disconnect the control cable from the transaxle.

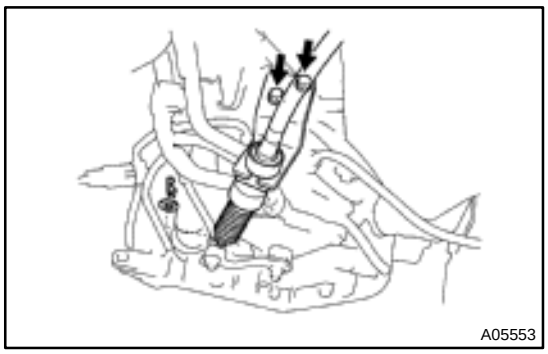

17. A/T:
DISCONNECT CONTROL CABLE(S) FROM TRANSAXLE

(a) Remove the clip and plate washer.
(b) Remove the 2 bolts from the LH engine mounting bracket.
(c) Disconnect the control cable from the transaxle.

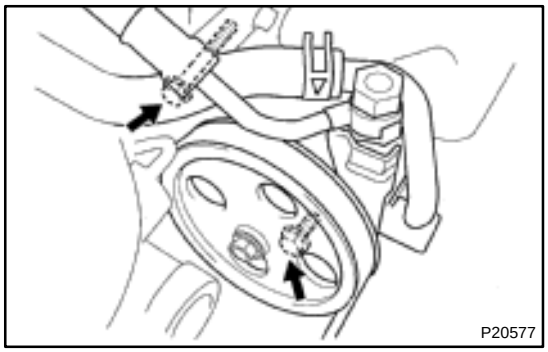

18. w/ PS:
REMOVE PS PUMP WITHOUT DISCONNECTING HOSES

(a) Loosen the 2 bolts, and remove the PS drive belt.
(b) Remove the 2 bolts, and disconnect the PS pump from the engine.

HINT:
Put aside the PS pump, and suspend it.

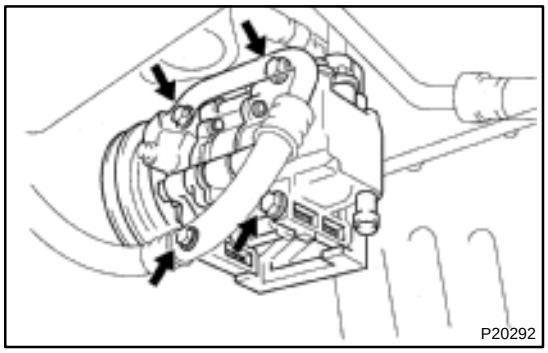

19. w/ A/C:
REMOVE A/C COMPRESSOR

(a) Disconnect the compressor connector.
(b) Remove the 4 compressor mounting bolts.

HINT:
Put aside the compressor, and suspend it.

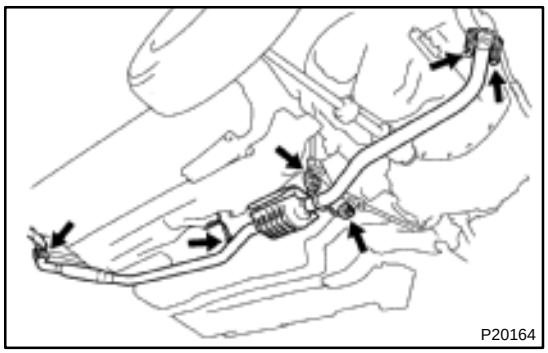

20. REMOVE FRONT EXHAUST PIPE

(a) Disconnect the heated oxygen sensor.
(b) Remove the 2 bolts, compression springs and disconnect the exhaust pipe.
(c) Remove the bolts and rear clamp.
(d) Disconnect the 2 rings and remove the front exhaust pipe.

21. REMOVE DRIVE SHAFTS (See page SA–18)

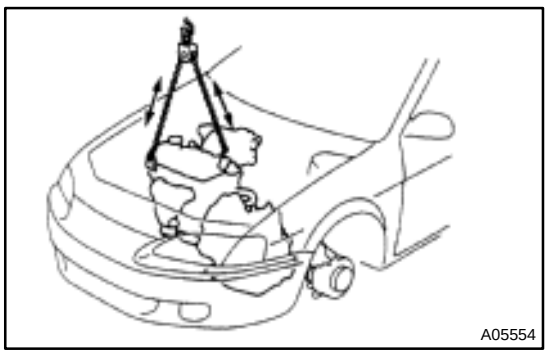

22. REMOVE ENGINE WITH TRANSAXLE FROM VEHICLE

(a) Install the No.1 engine hanger in the correct direction.
Part No.:
No.1 engine hanger 12281–11031
Bolt 91642–80825
(b) Attach the engine sling device to the engine hangers.

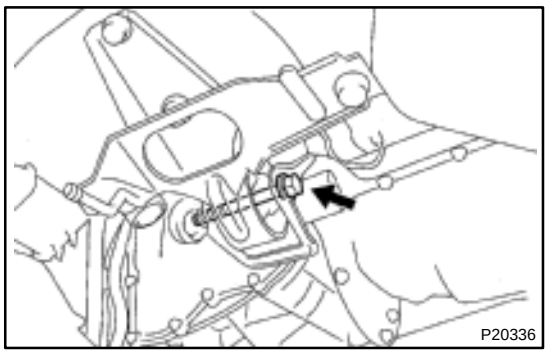

(c) Remove the rear engine mounting insulator through bolt.
(d) Remove charcoal canister (See page EM–13).

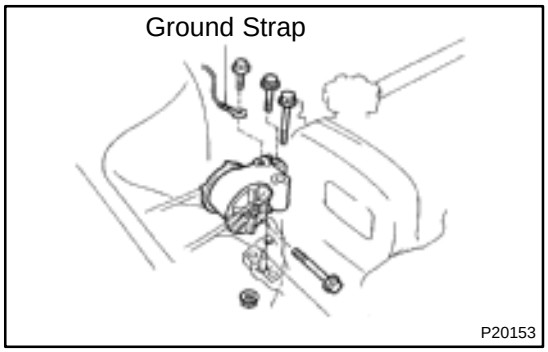

(e) Remove the bolt and disconnect the ground strap.
(f) Remove the through bolt, 2 bolts, nut and RH engine mounting insulator.

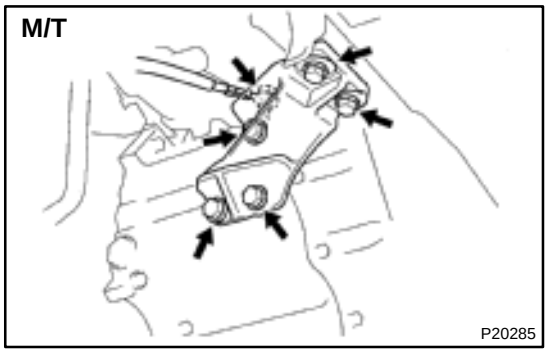

(g) Remove the bolt and disconnect the ground strap.
(h) Remove the 5 bolts and LH engine mounting bracket.

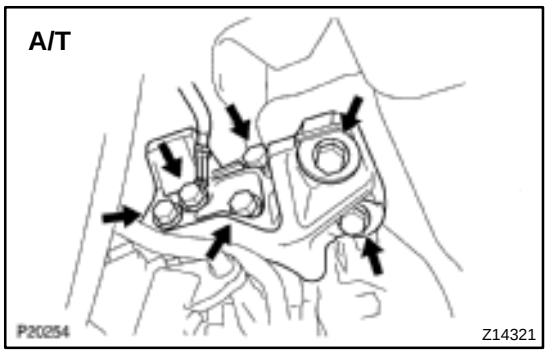

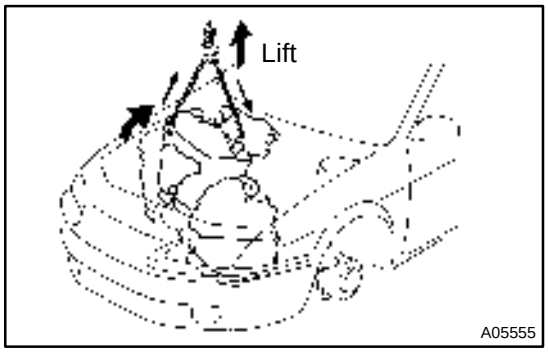

(i) Lift the engine out of the vehicle slowly and carefully.

HINT:

Clear the battery carrier support while lowering the transaxle.

(j) Place the engine with the transaxle onto the stand.

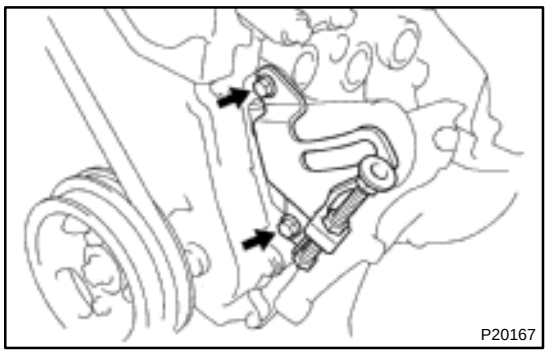

23. w/ PS:
REMOVE PS PUMP ADJUSTING STRUT

Remove the 2 bolts and PS pump adjusting strut.

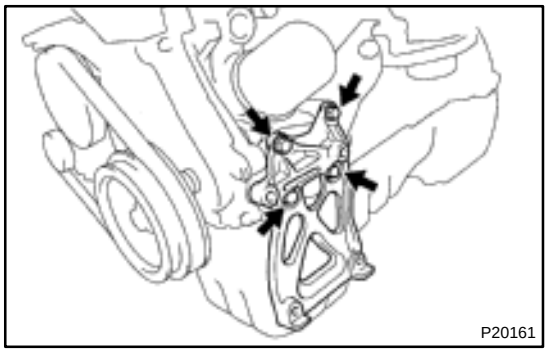

24. w/ A/C:
REMOVE A/C COMPRESSOR MOUNTING BRACKET

Remove the 4 bolts and compressor mounting bracket.

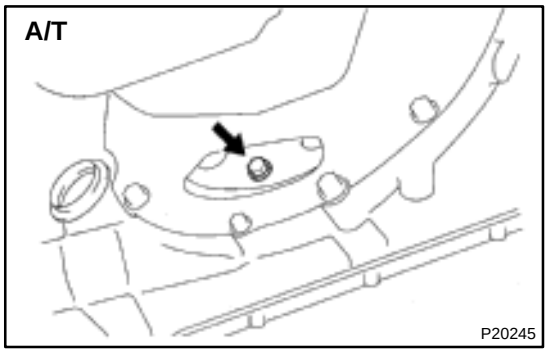

25. A/T:
REMOVE TORQUE CONVERTER CLUTCH MOUNTING BOLTS

(a) Remove the engine rear end plate hole cover.
(b) Turn the crankshaft to gain access to each bolt.
(c) Hold the crankshaft pulley bolt with a wrench.
(d) Remove the 6 bolts.

26. REMOVE STARTER (See page ST–4 or ST–18)

27. SEPARATE ENGINE AND TRANSAXLE

EXHAUST SYSTEM

COMPONENTS

EM1AI–01

California

HINT:
- Before installing the heated oxygen sensor (bank1 sensor2) sensor, twist the sensor wire counterclockwise 3 and 1/2 turns.
- After installing the heated oxygen sensor (bank1 sensor2), check that the sensor wire is not twisted. If it is twisted, remove the heated oxygen sensor (bank1 sensor2) and reinstall it.

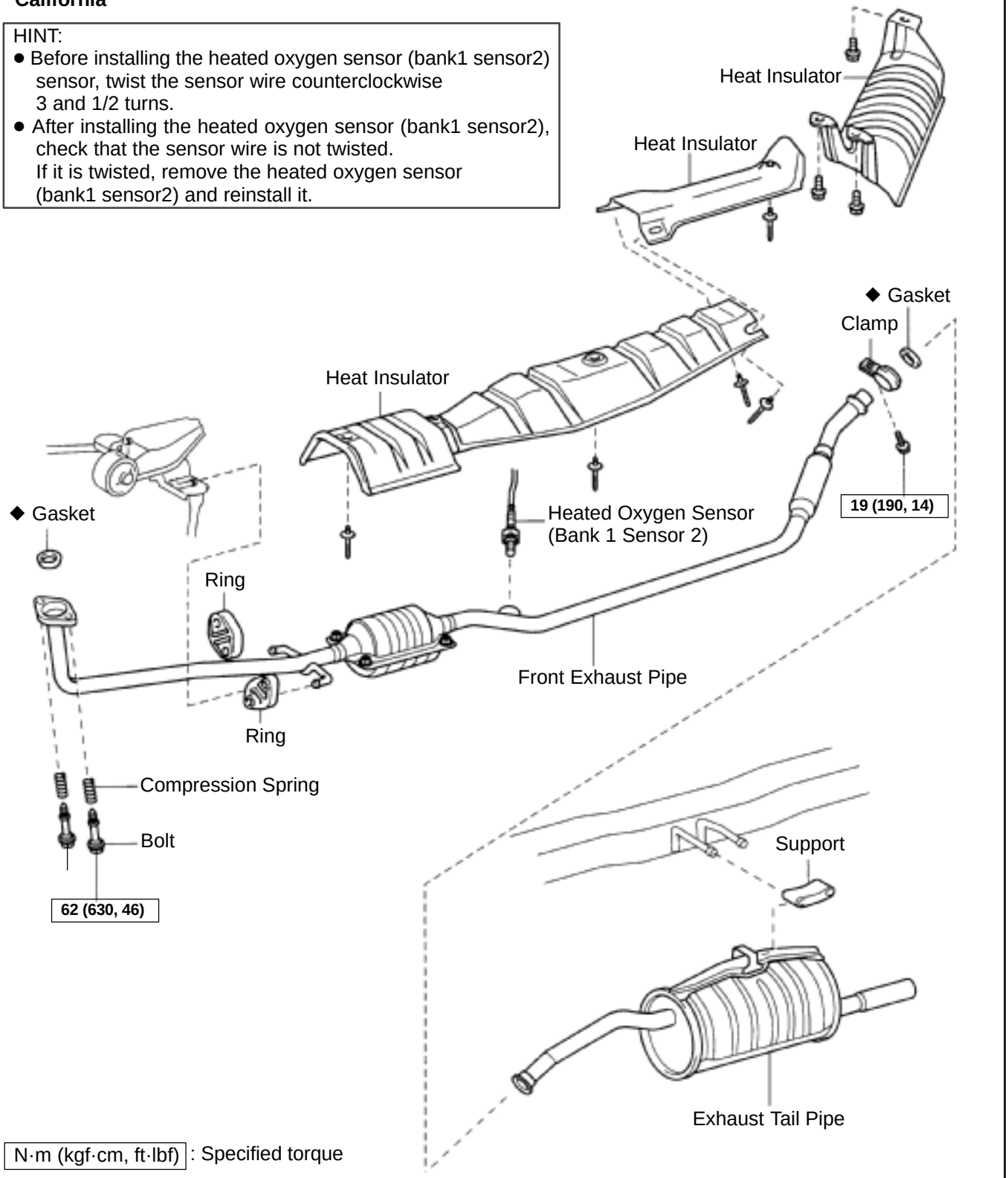

N·m (kgf·cm, ft·lbf) : Specified torque

◆ Non–reusable part

A05557

IDLE SPEED

EM0K8–02

INSPECTION

1. INITIAL CONDITIONS

(a) Engine coolant at normal operating temperature
(b) Air cleaner installed
(c) All pipes and hoses of air induction system connected
(d) All accessories switched OFF
(e) All vacuum lines properly connected
(f) SFI system wiring connectors fully plugged
(g) Ignition timing set correctly
(h) Transmission in neutral position

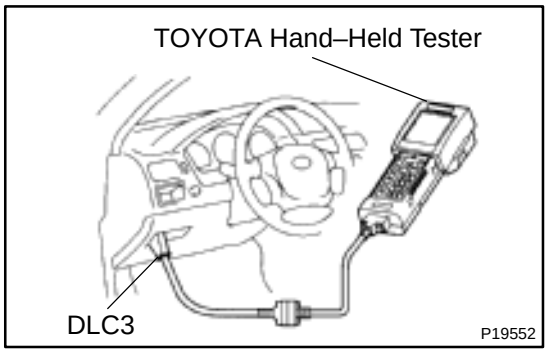

2. CONNECT TOYOTA HAND–HELD TESTER OR OBDII SCAN TOOL

(a) Remove the fuse cover on the instrument panel.
(b) Connect the TOYOTA hand–held tester or OBDII scan tool to the DLC3.
(c) Please refer to the TOYOTA hand–held tester or OBDII scan tool operator's manual for further details.

3. INSPECT IDLE SPEED

(a) Race the engine speed at 2,500 rpm for approx. 90 seconds.
(b) Check the idle speed.

Idle speed:
750 ± 50 rpm
(w/ Cooling fan OFF and transmission in neutral position)

If the idle speed is not as specified, check the IAC valve and air intake system.

4. DISCONNECT TOYOTA HAND–HELD TESTER OR OBDII SCAN TOOL

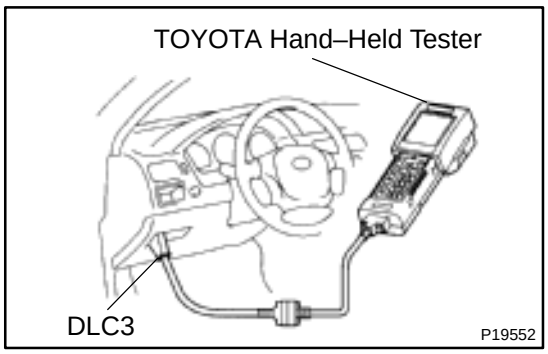

IGNITION TIMING

EM0K9–01

INSPECTION

1. WARM UP ENGINE

Allow the engine to warm up to normal operating temperature.

2. CONNECT TOYOTA HAND–HELD TESTER OR OBDII SCAN TOOL

(a) Remove the fuse cover on the instrument panel.

(b) Connect the TOYOTA hand–held tester or OBDII scan tool to the DLC3.

(c) Please refer to the TOYOTA hand–held tester or OBDII scan tool operator's manual for further details.

3. CONNECT TIMING LIGHT

4. INSPECT IGNITION TIMING

(a) Using SST, connect terminals TE1 and E1 of the DLC1.
SST 09843–18020

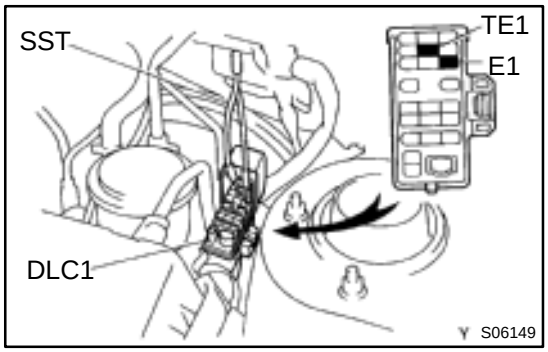

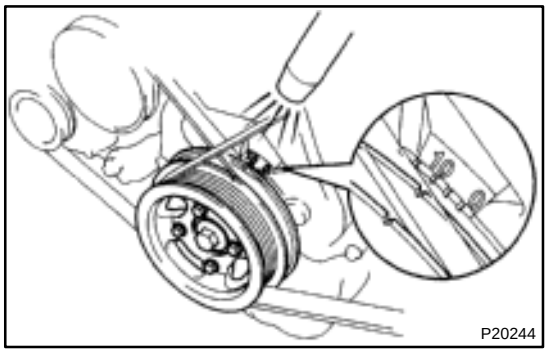

(b) Using a timing light, check the ignition timing.
Ignition timing:
10° BTDC @ idle
(w/ Cooling fan OFF and transmission in neutral position)

(c) Remove the SST from the DLC1.
SST 09843–18020

5. FURTHER CHECK IGNITION TIMING

Check that the ignition timing advances.
Ignition timing:
7 – 17° BTDC @ idle
(w/ Cooling fan OFF and transmission in neutral position)

HINT:

The timing mark moves in a range between 7° and 17°.

6. DISCONNECT TIMING LIGHT

7. DISCONNECT TOYOTA HAND–HELD TESTER OR OBDII SCAN TOOL

TIMING BELT

COMPONENTS

EM0K4–04

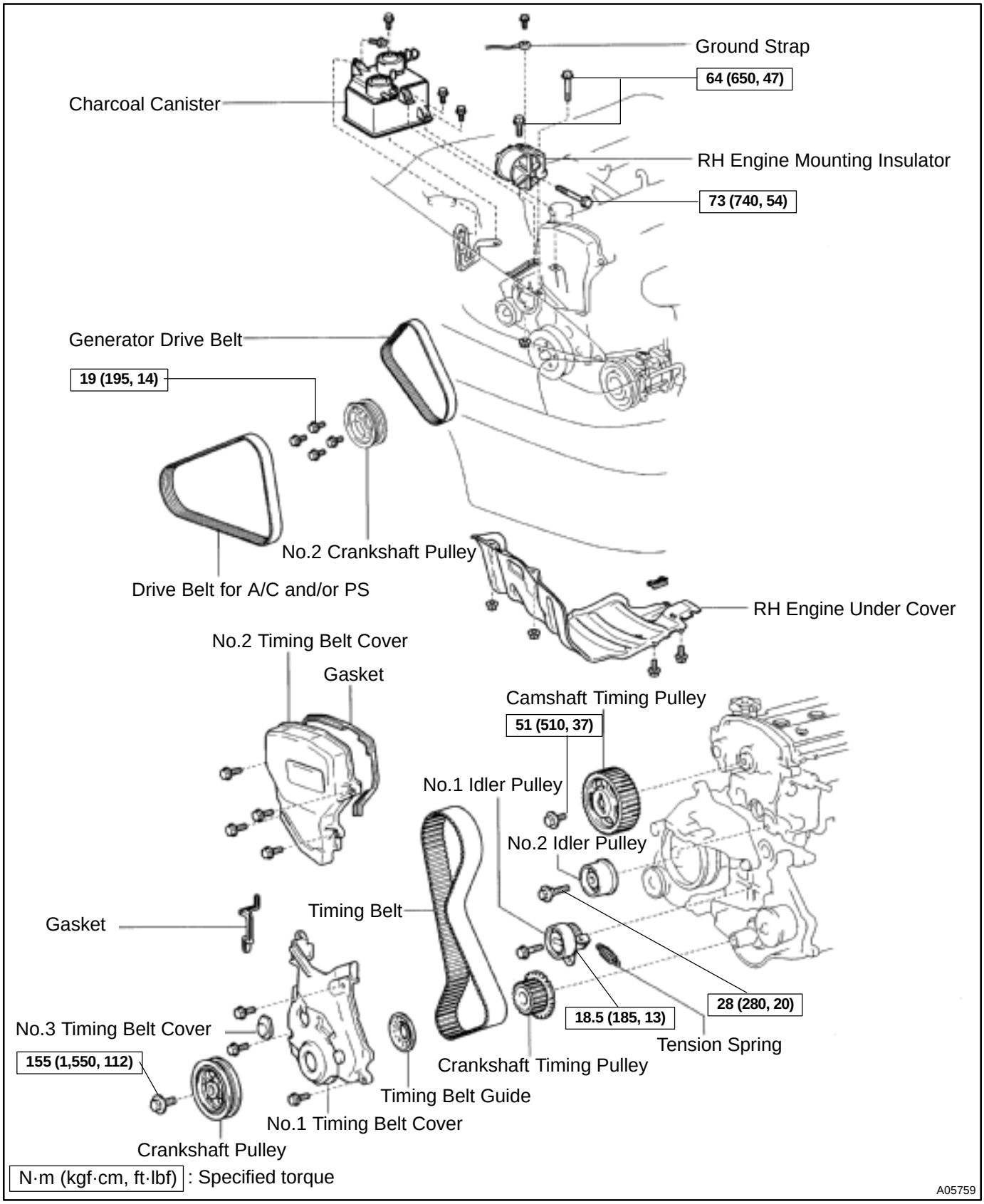

EM0K6–02

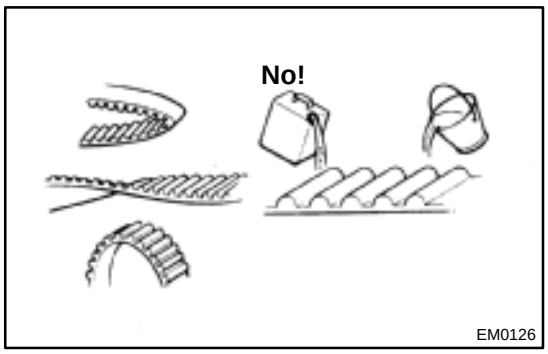

INSPECTION

1. INSPECT TIMING BELT

NOTICE:

- **Do not bend, twist or turn the timing belt inside out.**
- **Do not allow the timing belt to come into contact with oil, water or steam.**
- **Do not utilize timing belt tension when installing or removing the mounting bolt of the camshaft timing pulley.**

If there are any defects as shown in the illustration, check these points:

(a) Premature parting
- Check for proper installation.
- Check the timing cover gasket for damage and proper installation.

(b) If the belt teeth are cracked or damaged, check to see if either camshaft or oil pump is locked.

(c) If there is noticeable wear or cracks on the belt face, check to see if there are nicks on the side of the idler pulley lock.

(d) If there is wear or damage on only one side of the belt, check the belt guide and the alignment of each pulley.

(e) If there is noticeable wear on the belt teeth, check the timing belt cover for damage and check gasket has been installed correctly and for foreign material on the pulley teeth.

If necessary, replace the timing belt.

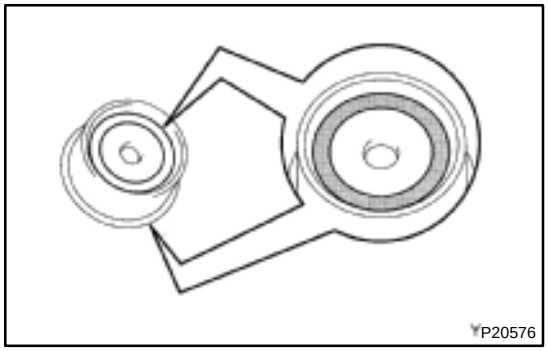

2. INSPECT IDLER PULLEYS

(a) Visually check the seal portion of the idler pulley for oil leakage.

If leakage is found, replace the idler pulley.

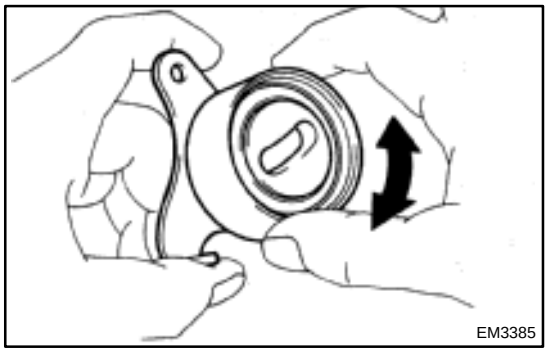

(b) Check that the idler pulley turns smoothly.

If necessary, replace the idler pulley.

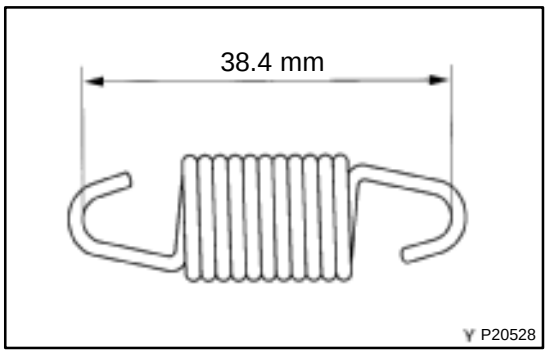

3. INSPECT TENSION SPRING

(a) Measure the free length of tension spring.

Free length:

38.4 mm (1.512 in.)

If the free length is not as specified, replace the tension spring.

(b) Measure the tension of the tension spring at the specified installed length.

Installed tension (at 47.4 mm (1.866 in.)):

32 N (3.3 kgf, 7.3 lbf)

If the installed tension is not as specified, replace the tension spring.

EM0K7–05

INSTALLATION

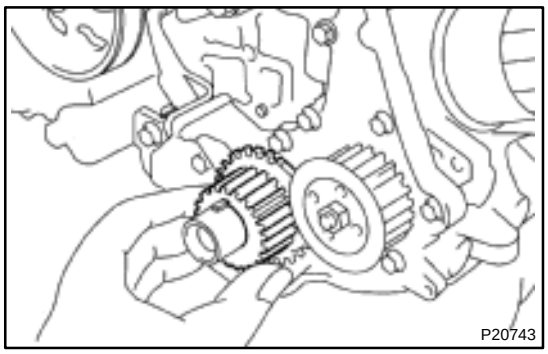

1. INSTALL CRANKSHAFT TIMING PULLEY

(a) Align the pulley set key with the key groove of the pulley.

(b) Slide on the timing pulley, facing the rotor side of the crankshaft position sensor inward.

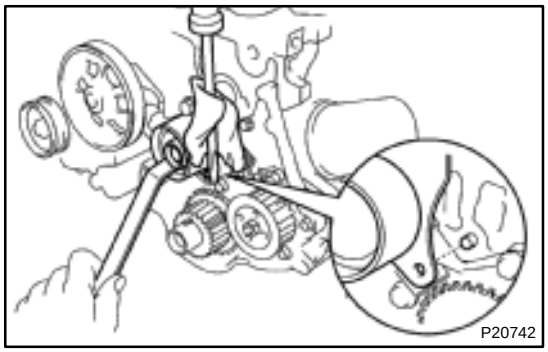

2. TEMPORARILY INSTALL NO.1 IDLER PULLEY AND TENSION SPRING

(a) Install the tension spring to the idler pulley.

(b) Align the bracket pin hole with the pivot pin.

(c) Install the idler pulley with the bolt. Do not tighten the bolt yet.

(d) Pry the idler pulley toward the left as far as it will go and temporarily tighten the bolt.

(e) Check that the idler pulley moves smoothly.

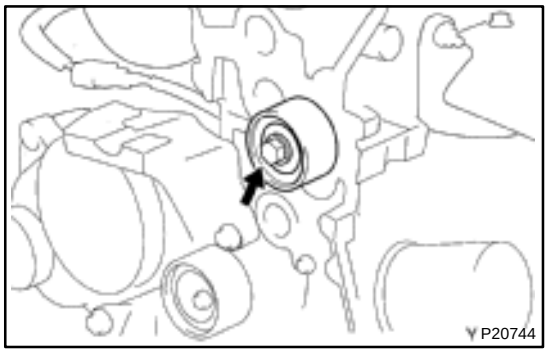

3. INSTALL NO.2 IDLER PULLEY

(a) Install the idler pulley with the bolt.
Torque: 28 N·m (280 kgf·cm, 20 ft·lbf)

(b) Check that the idler pulley moves smoothly.

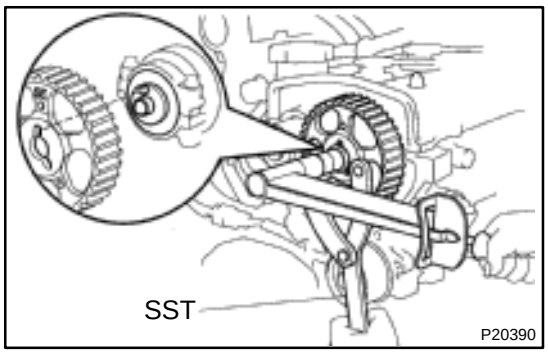

4. INSTALL CAMSHAFT TIMING PULLEY

(a) Align the camshaft knock pin with the knock pin groove on the pulley side with the 5E mark, and slide on the timing pulley.

(b) Using SST, install the pulley bolt.
SST 09960–10010 (09962–01000, 09963–01000)
Torque: 51 N·m (510 kgf·cm, 37 ft·lbf)

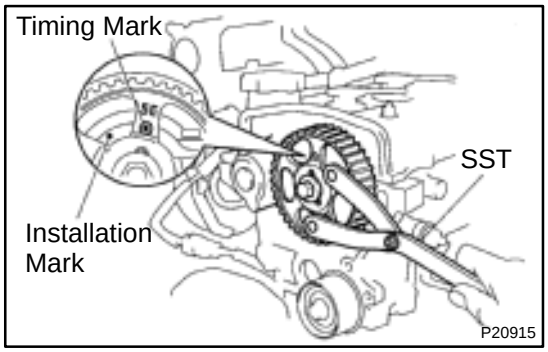

5. SET NO.1 CYLINDER TO TDC/COMPRESSION

(a) Using SST, align the hole of the camshaft timing pulley on the side with the 5E mark with the timing mark of the bearing cap.
SST 09960–10010 (09962–01000, 09963–01000)

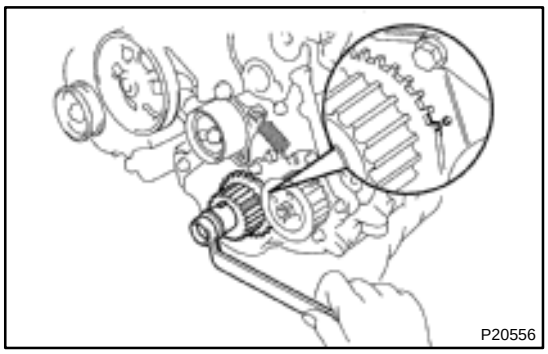

(b) Using the crankshaft pulley bolt, turn the crankshaft and align the timing marks of the crankshaft timing pulley and oil pump body.

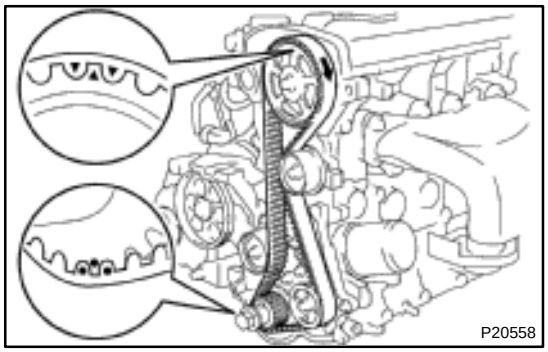

6. INSTALL TIMING BELT

NOTICE:

The engine should be cold.

HINT:

When re–using timing belt:

Align the points marked during removal, and install the belt with the arrow pointing in the direction of engine revolution.

(a) Remove any oil or water on the pulleys, and keep them clean.

NOTICE:

Only wipe the pulleys; do not use any cleansing agent.

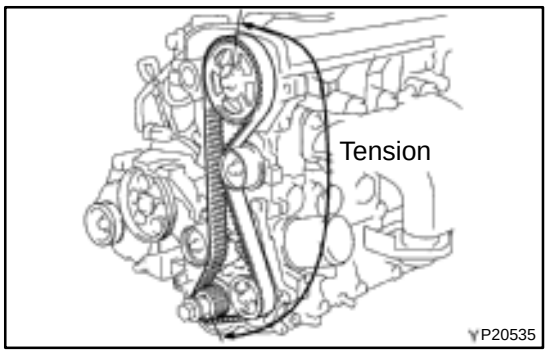

(b) Install the timing belt, and check the tension between the crankshaft timing pulley and camshaft timing pulley.

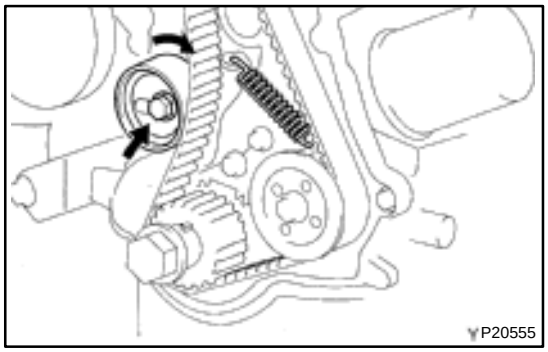

7. CHECK VALVE TIMING

(a) Loosen the No.1 idler pulley mount bolt, until the pulley is moved slightly by the spring tension.

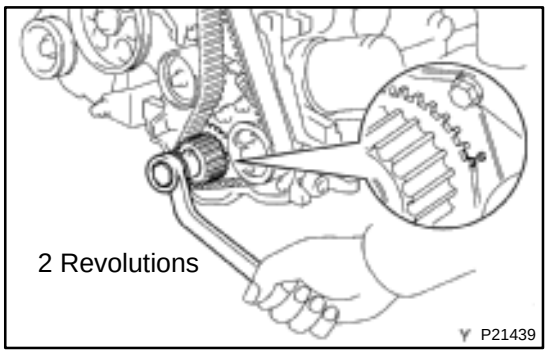

(b) Slowly turn the crankshaft pulley 2 revolutions from TDC to TDC.

NOTICE:
Always turn the crankshaft clockwise.

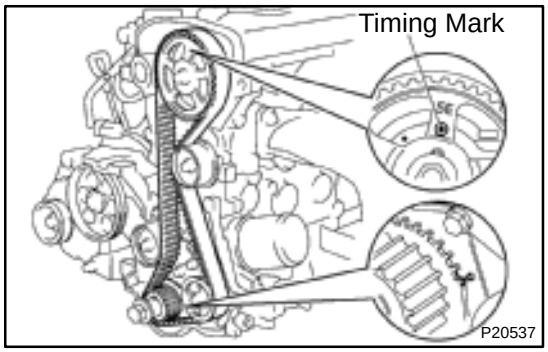

(c) Check that each pulley aligns with the timing marks as shown in the illustration.

If the timing marks do not align, remove the timing belt and reinstall it.

(d) Tighten the No.1 idler pulley bolt.
Torque: 18.5 N·m (185 kgf·cm, 13 ft·lbf)

(e) Remove the crankshaft pulley bolt.

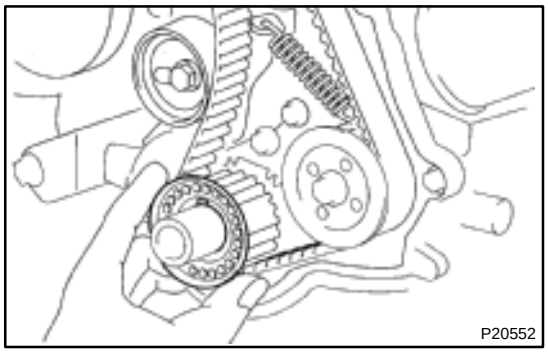

8. INSTALL TIMING BELT GUIDE

Install the guide, facing the cup side outward.

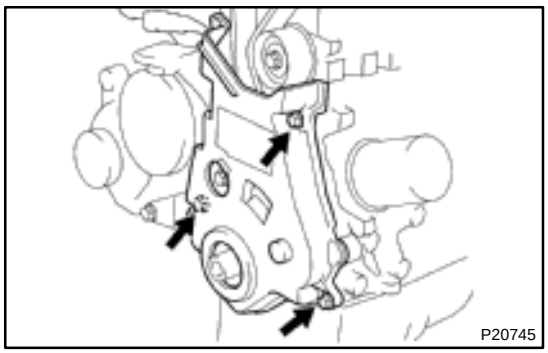

9. INSTALL NO.1 TIMING BELT COVER

(a) Install the gasket to the belt cover.

(b) Install the belt cover with the 3 bolts.

10. INSTALL NO.3 TIMING BELT COVER

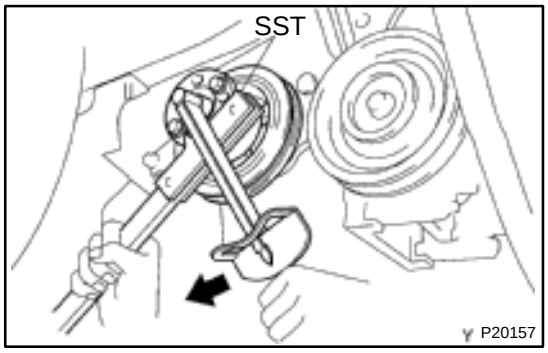

11. INSTALL CRANKSHAFT PULLEY

(a) Align the pulley set key with the key groove of the pulley, and slide on the pulley.

(b) Using SST, install the pulley bolt.
SST 09213–14010, 09330–00021
Torque: 155 N·m (1,550 kgf·cm, 112 ft·lbf)

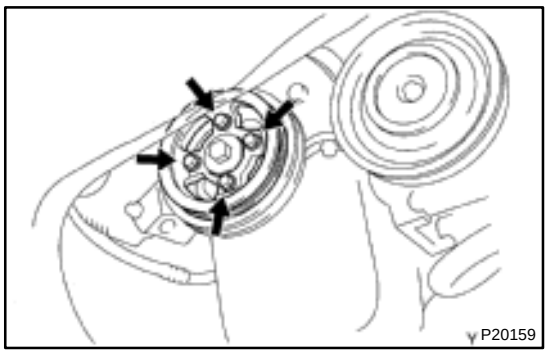

12. w/ A/C and/or w/ PS:
INSTALL NO.2 CRANKSHAFT PULLEY

Install the No.2 crankshaft pulley with the 4 bolts.

Torque: 19 N·m (195 kgf·cm, 14 ft·lbf)

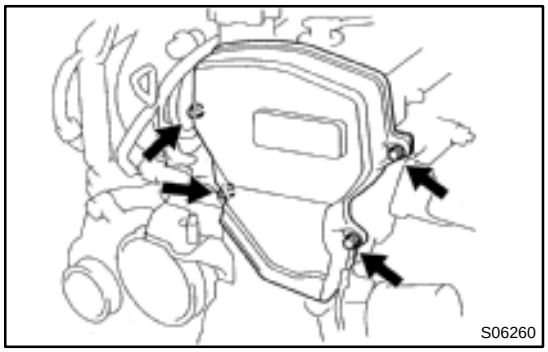

13. INSTALL NO.2 TIMING BELT COVER

(a) Install the gasket to the belt cover.

(b) Install the belt cover with the 4 bolts.

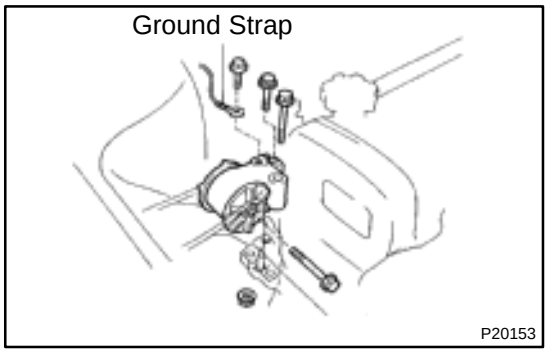

14. INSTALL RH ENGINE MOUNTING INSULATOR

(a) Attach the RH mounting insulator to the mounting bracket and body, and temporarily install the through bolt, 2 bolts and nut.

(b) Torque the 2 bolts, nut and through bolt of the RH mounting insulator.

Torque:
Through bolt
73 N·m (740 kgf·cm, 54 ft·lbf)
Others
64 N·m (650 kgf·cm, 47 ft·lbf)

(c) Connect the ground strap with the bolt.

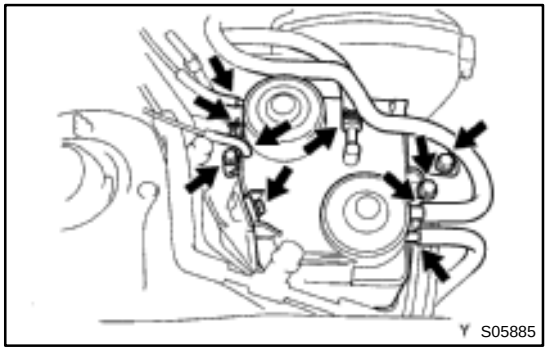

15. INSTALL CHARCOAL CANISTER

(a) Install the charcoal canister with the 4 bolts.

(b) Connect the 4 EVAP hoses and 2 vacuum hoses.

16. INSTALL GENERATOR DRIVE BELT
(See page CH–2)

17. w/ A/C and/or w/ PS:
INSTALL DRIVE BELT
(See page AC–16 and SR–3)

18. INSTALL RH ENGINE UNDER COVER

EM0K5–01

REMOVAL

1. REMOVE RH ENGINE UNDER COVER

2. w/ A/C and/or w/ PS:
REMOVE DRIVE BELT

3. REMOVE GENERATOR DRIVE BELT

4. REMOVE CHARCOAL CANISTER

(a) Disconnect the 4 EVAP hoses and 2 vacuum hoses.

(b) Remove the 4 bolts and charcoal canister.

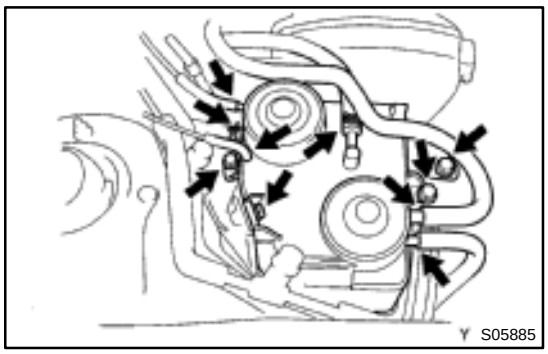

5. SLIGHTLY JACK UP ENGINE

Raise the engine enough to remove the weight from the engine mounting on the right side.

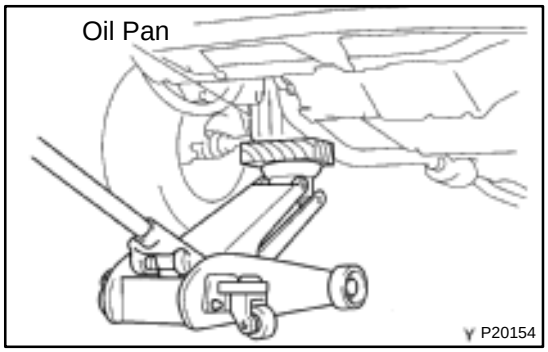

6. REMOVE RH ENGINE MOUNTING INSULATOR

(a) Remove the bolt and disconnect the ground strap.

(b) Remove the through bolt, 2 bolts, nut and mounting insulator.

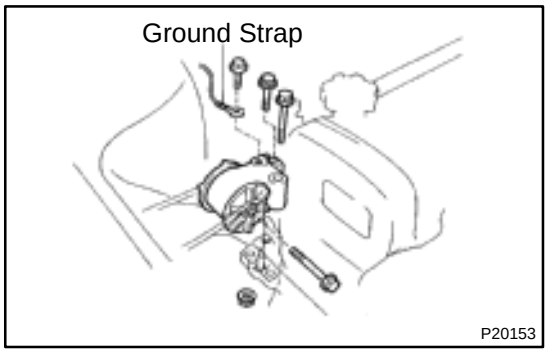

7. REMOVE NO.2 TIMING BELT COVER

Remove the 4 bolts, timing belt cover and gasket.

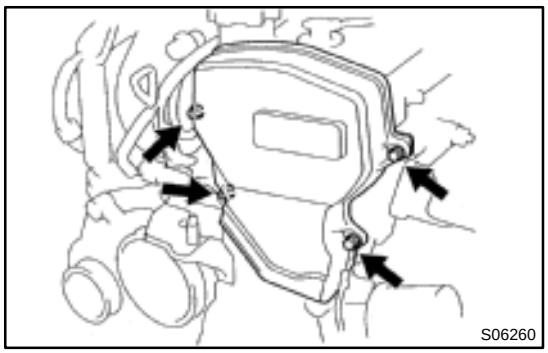

8. SET NO.1 CYLINDER TO TDC/COMPRESSION

(a) Turn the crankshaft pulley, and align its groove with the timing mark ”0” of the No.1 timing belt cover.

NOTICE:

Always turn the crankshaft clockwise.

(b) Check that the hole of the camshaft timing pulley on the side with the 5E mark is aligned with the timing mark of the No.1 bearing cap.

If not, turn the crankshaft pulley 1 complete revolution (360˚).

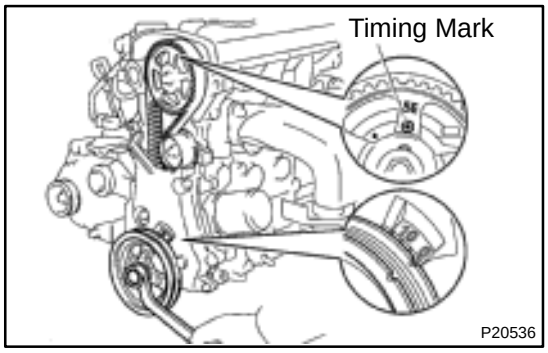

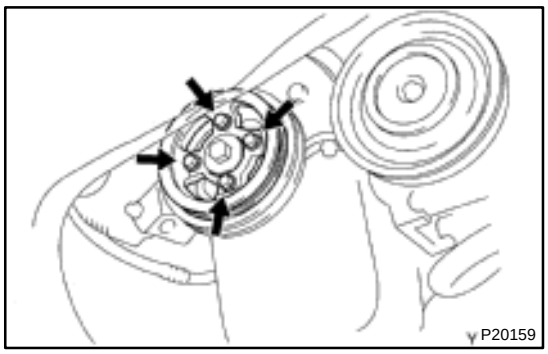

9. w/ A/C and/or w/ PS:
REMOVE NO.2 CRANKSHAFT PULLEY

Remove the 4 bolts and No.2 crankshaft pulley.

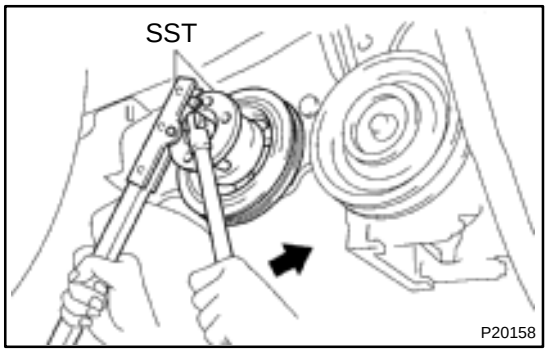

10. REMOVE CRANKSHAFT PULLEY

(a) Using SST, remove the pulley bolt.
SST 09213–14010, 09330–00021

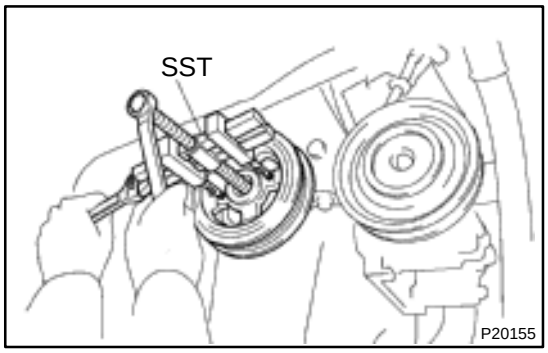

(b) Using SST, remove the pulley.
SST 09950–50010 (09951–05010, 09952–05010, 09953–05020, 09954–05020)

11. REMOVE NO.3 TIMING BELT COVER

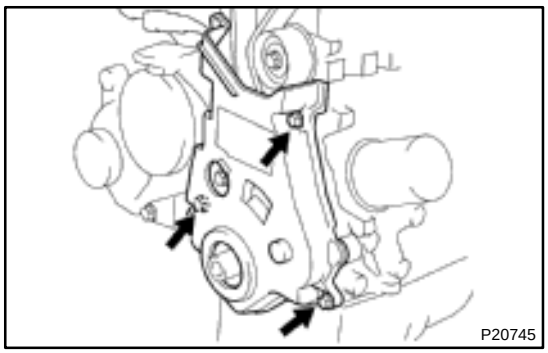

12. REMOVE NO.1 TIMING BELT COVER

Remove the 3 bolts, timing belt cover and gasket.

13. REMOVE TIMING BELT GUIDE

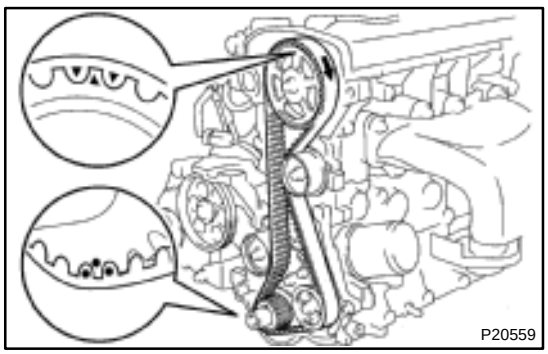

14. REMOVE TIMING BELT

HINT:
(When re–using timing belt):
Draw a direction arrow on the timing belt (in direction of engine revolution), and place matchmarks on the timing belt and pulleys as shown in the illustration.

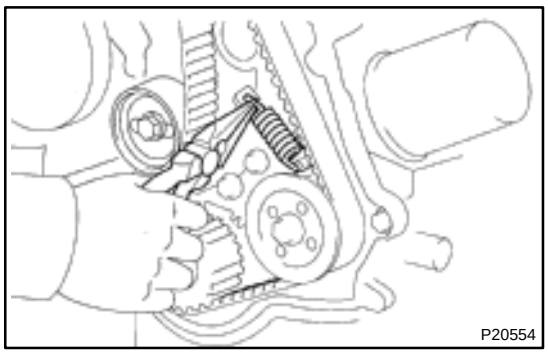

(a) Remove the tension spring.

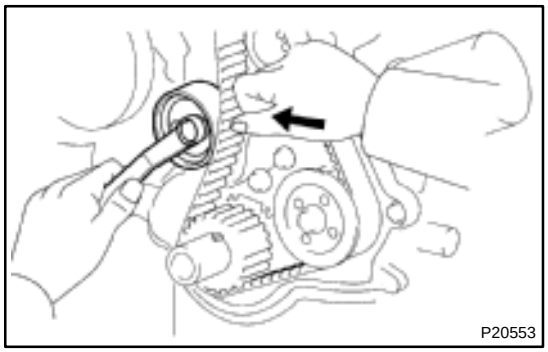

(b) Loosen the No.1 idler pulley bolt and push it left as far as it will go and then temporarily tighten it.
(c) Remove the timing belt.

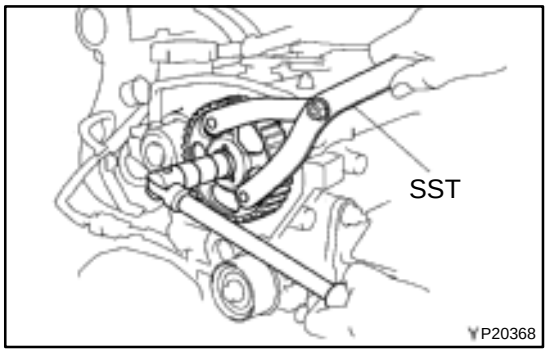

15. REMOVE CAMSHAFT TIMING PULLEY

Using SST, remove the bolt and timing pulley.

SST 09960–10010 (09962–01000, 09963–01000)

16. REMOVE NO.1 IDLER PULLEY

17. REMOVE NO.2 IDLER PULLEY

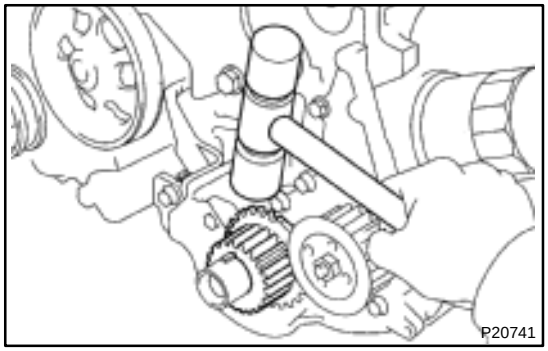

18. REMOVE CRANKSHAFT TIMING PULLEY

If the timing pulley cannot be removed by hand, use a plastic–faced hammer.

NOTICE:

Do not pry the rotor part of the pulley with the screwdriver.

VALVE CLEARANCE

INSPECTION

EM0KA–04

HINT:

Inspect and adjust the valve clearance when the engine is cold.

1. DISCONNECT PCV HOSES FROM CYLINDER HEAD COVER

2. REMOVE HIGH–TENSION CORDS AND IGNITION COILS FROM SPARK PLUGS

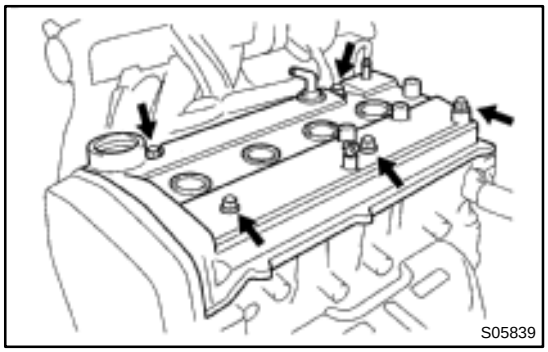

3. REMOVE CYLINDER HEAD COVER

(a) Remove the oil filler cap.

(b) Remove the 5 cap nuts and seal washers.

(c) Pry out the cylinder head cover, and remove the cover and gasket.

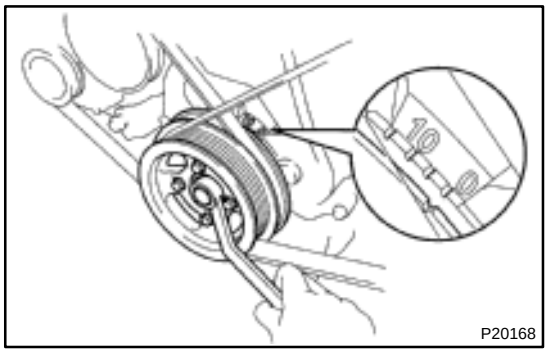

4. SET NO.1 CYLINDER TO TDC/COMPRESSION

(a) Turn the crankshaft pulley, and align its groove with the timing mark ”0” of the No.1 timing belt cover.

(b) Check that the valve lifters on the No.1 cylinder are loose and valve lifters on the No.4 cylinder are tight.

If not, turn the crankshaft 1 complete revolution (360˚) and align the marks as above.

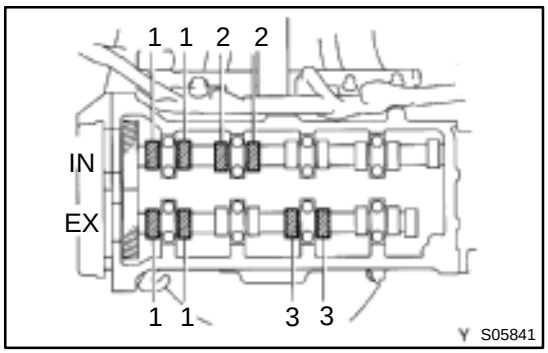

5. INSPECT VALVE CLEARANCE

(a) Check only the valves indicated.

(1) Using a feeler gauge, measure the clearance between the valve lifter and camshaft.

(2) Record the out–of–specification valve clearance measurements. They will be used later to determine the required replacement adjusting shim.

Valve clearance (Cold):

Intake	0.15 – 0.25 mm (0.006 – 0.010 in.)
Exhaust	0.31 – 0.41 mm (0.012 – 0.016 in.)

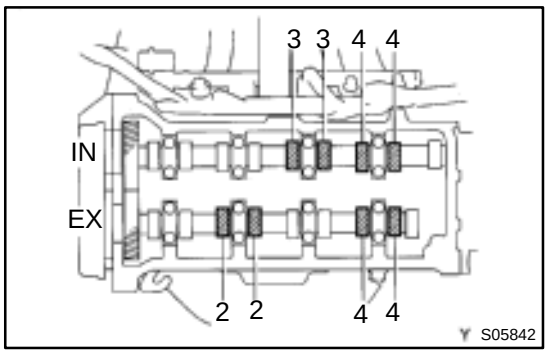

(b) Turn the crankshaft pulley 1 revolution (360˚) and align its groove with the timing mark ”0” of the No.1 timing belt cover.

(c) Check only the valves indicated as shown. Measure the valve clearance. (See procedure in step (a))

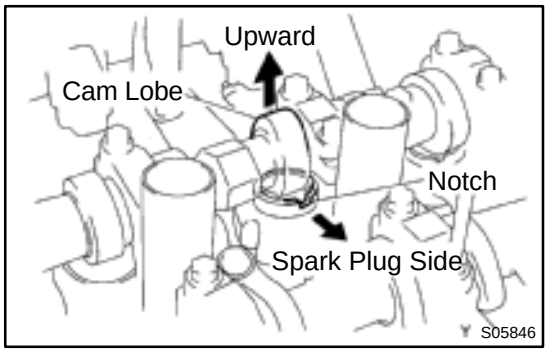

6. ADJUST VALVE CLEARANCE

(a) Remove the adjusting shim.

(1) Turn the crankshaft to position the cam lobe of the camshaft on the adjusting valve points upward.

(2) Position the notch of the valve lifter so that the shim can be removed with a small screwdriver as shown in the illustration.

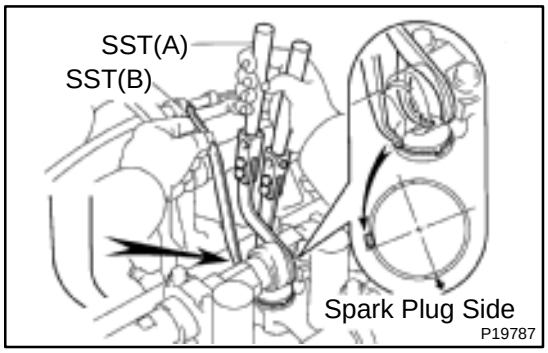

(3) Using SST (A), press down the valve lifter and place SST (B) between the camshaft and valve lifter flange. Remove SST (A).

SST 09248–55040 (09248–05410, 09248–05420)

HINT:

- Apply SST (B) at slight angle on the side marked with ”9”, at the position shown in the illustration.

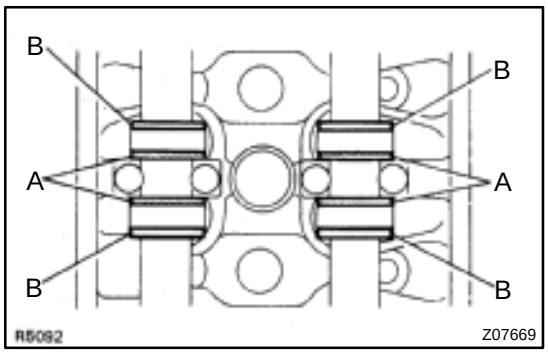

- Set SST (A) at position A, if position A is too narrow, at position B, as shown in the illustration.

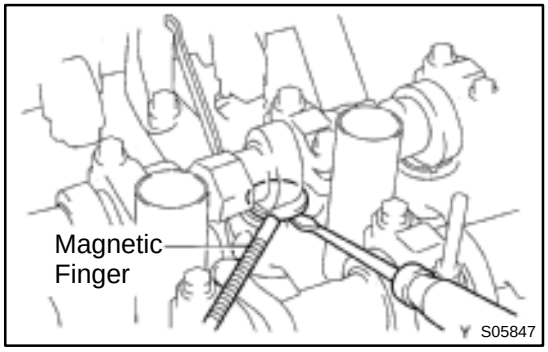

(4) Remove the adjusting shim with a small screwdriver and magnetic finger.

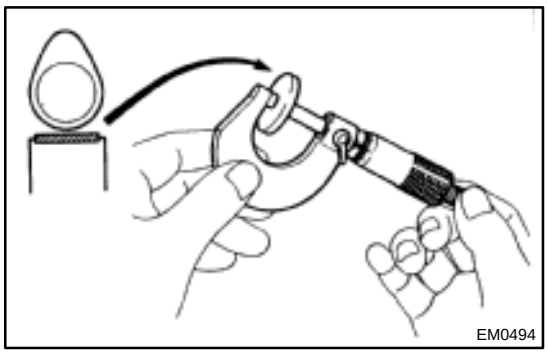

(b) Determine the replacement adjusting shim size by the following Formula or Charts on the next 2 pages:
  (1) Using a micrometer, measure the thickness of the removed shim.
  (2) Calculate the thickness of a new shim so that the valve clearance comes within specified value.
    T ..... Thickness of removed shim
    A ..... Measured valve clearance
    N ..... Thickness of new shim

Intake:

N = T + (A – 0.20 mm (0.008 in.))

Exhaust:

N = T + (A – 0.36 mm (0.014 in.))

  (3) Select a new shim with a thickness as close as possible to the calculated value.

HINT:

Shims are available in 17 increments of 0.05 mm (0.0020 in.), from 2.50 mm (0.0984 in.) to 3.30 mm (0.1299 in.).

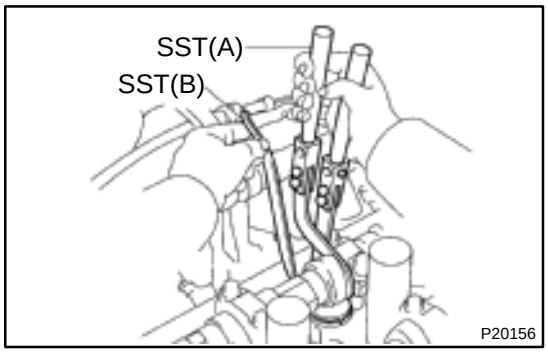

(c) Install a new adjusting shim.
  (1) Place a new adjusting shim on the valve lifter.
  (2) Using SST (A), press down the valve lifter and remove SST (B).

SST 09248–55040 (09248–05410, 09248–05020)

(d) Recheck the valve clearance.

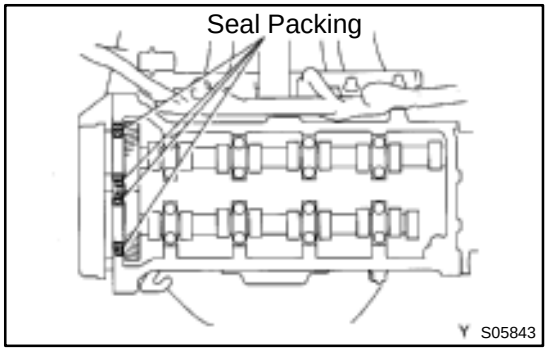

7. REINSTALL CYLINDER HEAD COVER

(a) Apply seal packing to the cylinder head as shown in the illustration.

Seal packing:

Part No. 08826–00080 or equivalent

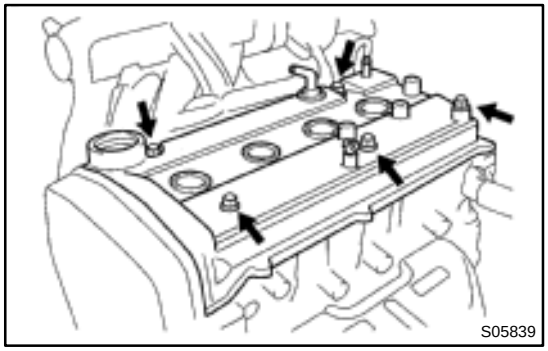

(b) Install the gasket to the cylinder head cover.

(c) Install the cylinder head cover with the 5 seal washers and cap nuts.

Torque: 7.0 N·m (70 kgf·cm, 61 in.·lbf)

(d) Install oil filler cap.

8. REINSTALL IGNITION COILS AND HIGH–TENSION CORDS

9. RECONNECT PCV HOSES TO CYLINDER HEAD COVER

Adjusting Shim Selection Chart (Intake)

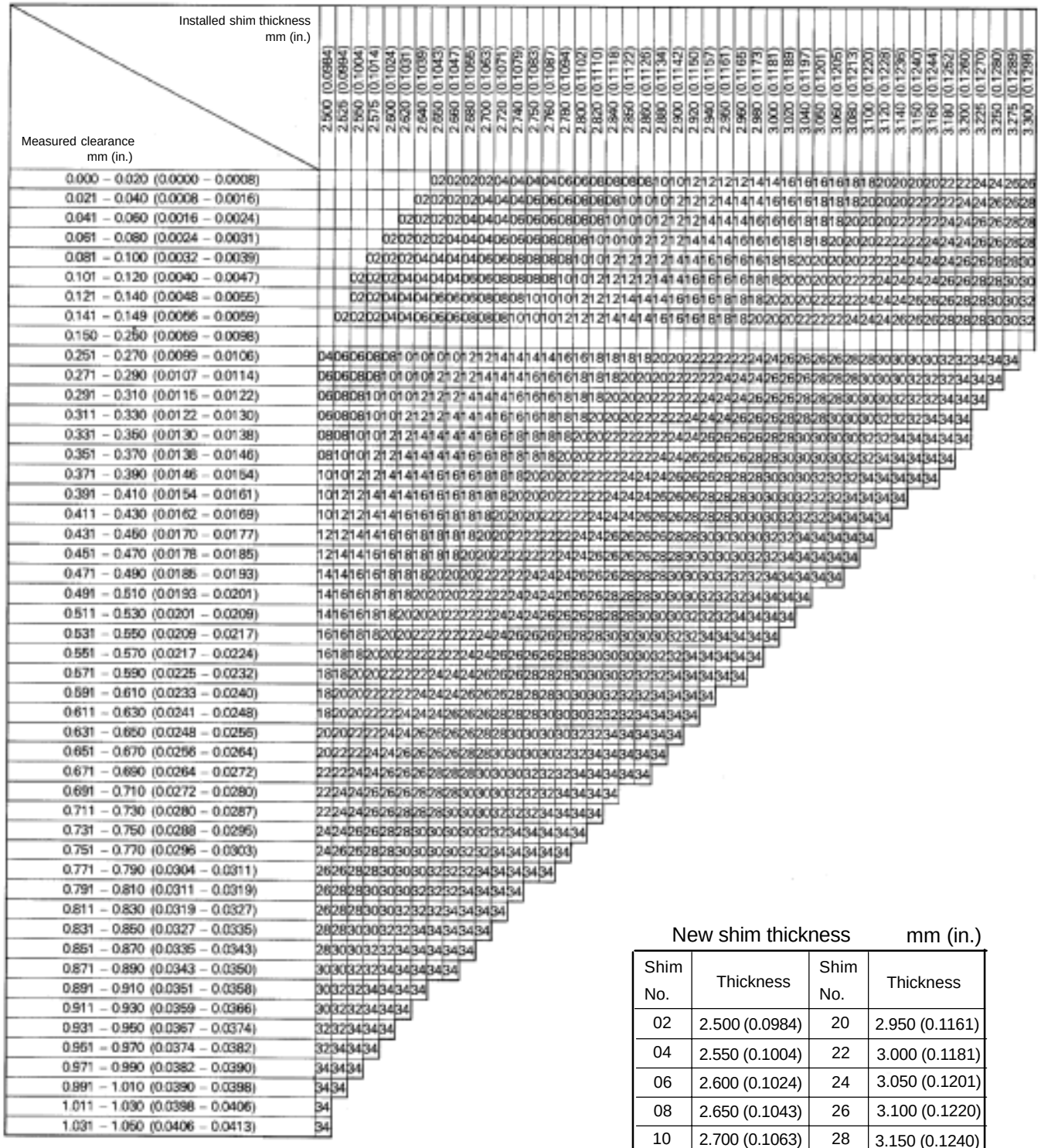

Intake valve clearance (Cold):
0.15 – 0.25 mm (0.006 – 0.010 in.)

EXAMPLE: The 2.800 mm (0.1102 in.) shim is installed, and the measured clearance is 0.450 mm (0.0177 in.). Replace the 2.800 mm (0.1102 in.) shim with a new No.24 shim.

New shim thickness mm (in.)

Shim No.	Thickness	Shim No.	Thickness
02	2.500 (0.0984)	20	2.950 (0.1161)
04	2.550 (0.1004)	22	3.000 (0.1181)
06	2.600 (0.1024)	24	3.050 (0.1201)
08	2.650 (0.1043)	26	3.100 (0.1220)
10	2.700 (0.1063)	28	3.150 (0.1240)
12	2.750 (0.1083)	30	3.200 (0.1260)
14	2.800 (0.1102)	32	3.250 (0.1280)
16	2.850 (0.1122)	34	3.300 (0.1299)
18	2.900 (0.1142)		

HINT: New shims have the thickness in millimeters imprinted on the face.

V03145

Adjusting Shim Selection Chart (Exhaust)

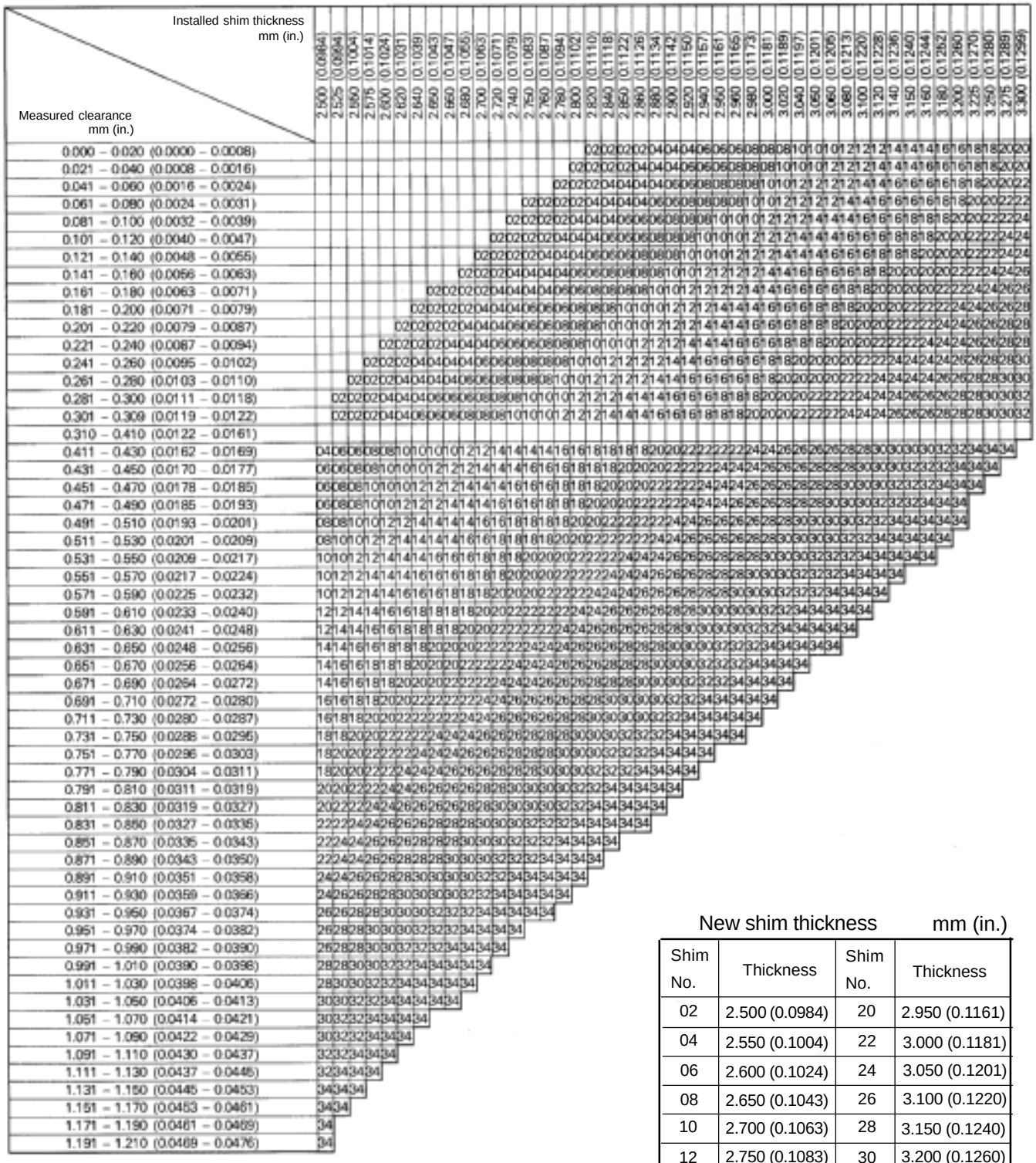

Exhaust valve clearance (Cold):
0.31 – 0.41 mm (0.012 – 0.016 in.)

EXAMPLE: The 2.800 mm (0.1102 in.) shim is installed, and the measured clearance is 0.450 mm (0.0177 in.). Replace the 2.800 mm (0.1102 in.) shim with a new No.18 shim.

New shim thickness mm (in.)

Shim No.	Thickness	Shim No.	Thickness
02	2.500 (0.0984)	20	2.950 (0.1161)
04	2.550 (0.1004)	22	3.000 (0.1181)
06	2.600 (0.1024)	24	3.050 (0.1201)
08	2.650 (0.1043)	26	3.100 (0.1220)
10	2.700 (0.1063)	28	3.150 (0.1240)
12	2.750 (0.1083)	30	3.200 (0.1260)
14	2.800 (0.1102)	32	3.250 (0.1280)
16	2.850 (0.1122)	34	3.300 (0.1299)
18	2.900 (0.1142)		

HINT: New shims have the thickness in millimeters imprinted on the face.

V03146

CAMSHAFT POSITION SENSOR

IG08I–01

COMPONENTS

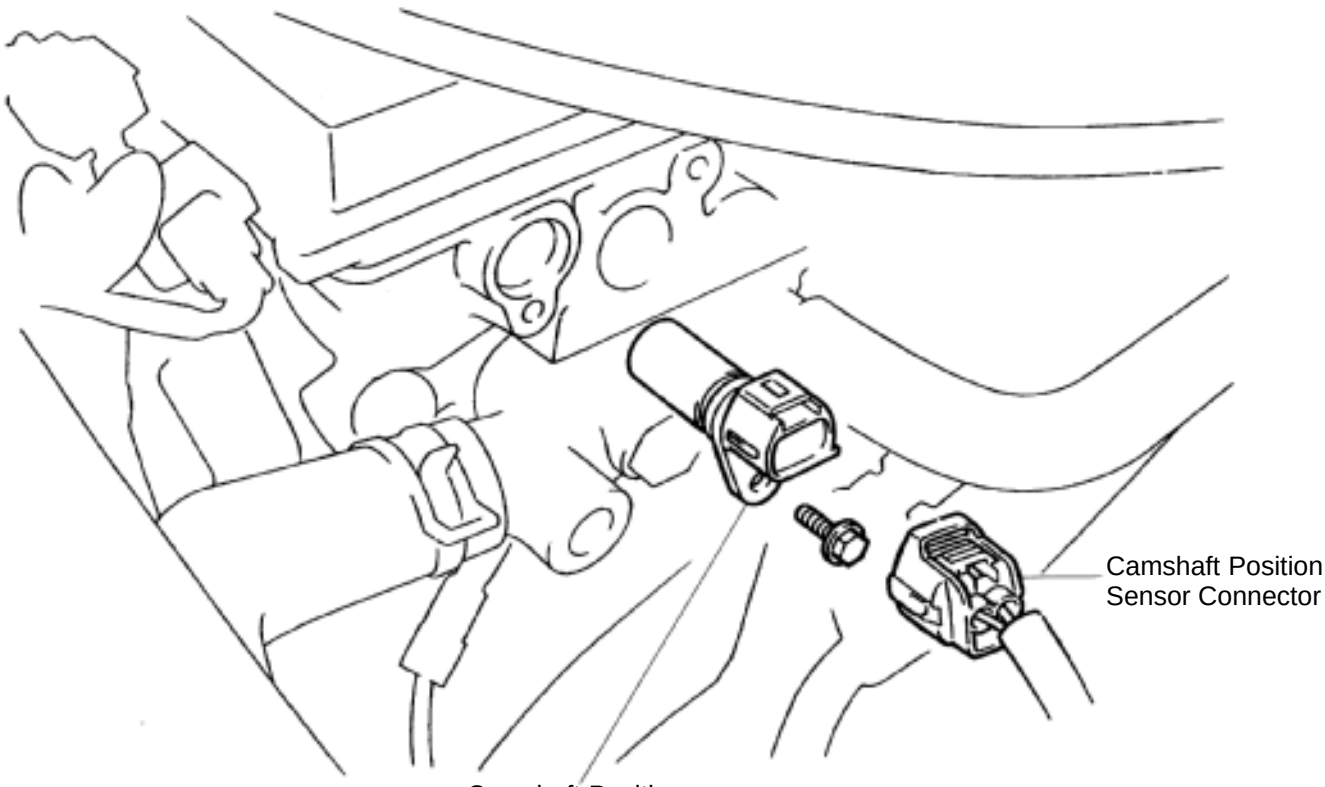

IG08K–03

INSTALLATION

Installation is in the reverse order of removal. (See page IG–10)

IG08J–01

REMOVAL

REMOVE CAMSHAFT POSITION SENSOR

(a) Disconnect the camshaft position sensor connector.

(b) Remove the bolt and camshaft position sensor.

Torque: 8 N·m (80 kgf·cm, 69 in.·lbf)

CRANKSHAFT POSITION SENSOR

IG08L–04

COMPONENTS

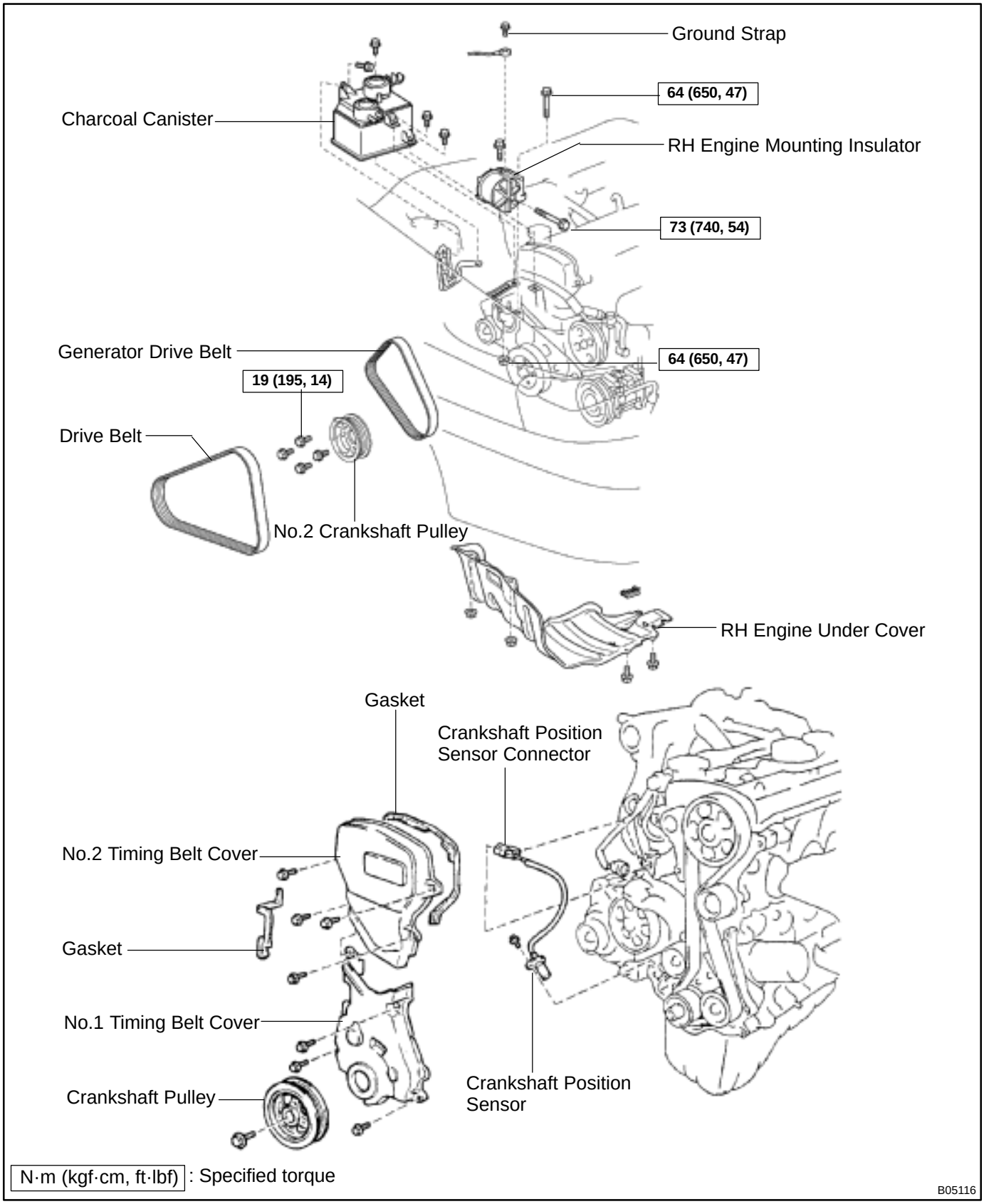

IG08N–01

INSTALLATION

Installation is in the reverse order of removal. (See page IG–13)

IG08M–03

REMOVAL

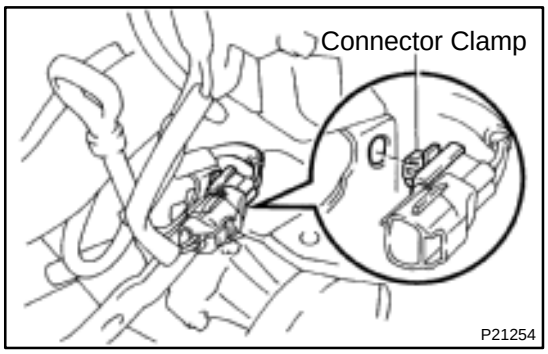

1. DISCONNECT CRANKSHAFT POSITION SENSOR CONNECTOR AND CLAMP

2. REMOVE RH ENGINE UNDER COVER

3. REMOVE NO.2 TIMING BELT COVER

(See page EM–13)

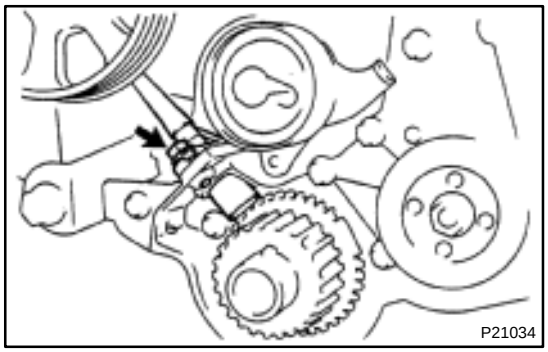

4. REMOVE CRANKSHAFT POSITION SENSOR

Remove the bolt and disconnect the crankshaft position sensor.

Torque: 8 N·m (80 kgf·cm, 69 in.·lbf)

IGNITION COIL

COMPONENTS

IG08F–01

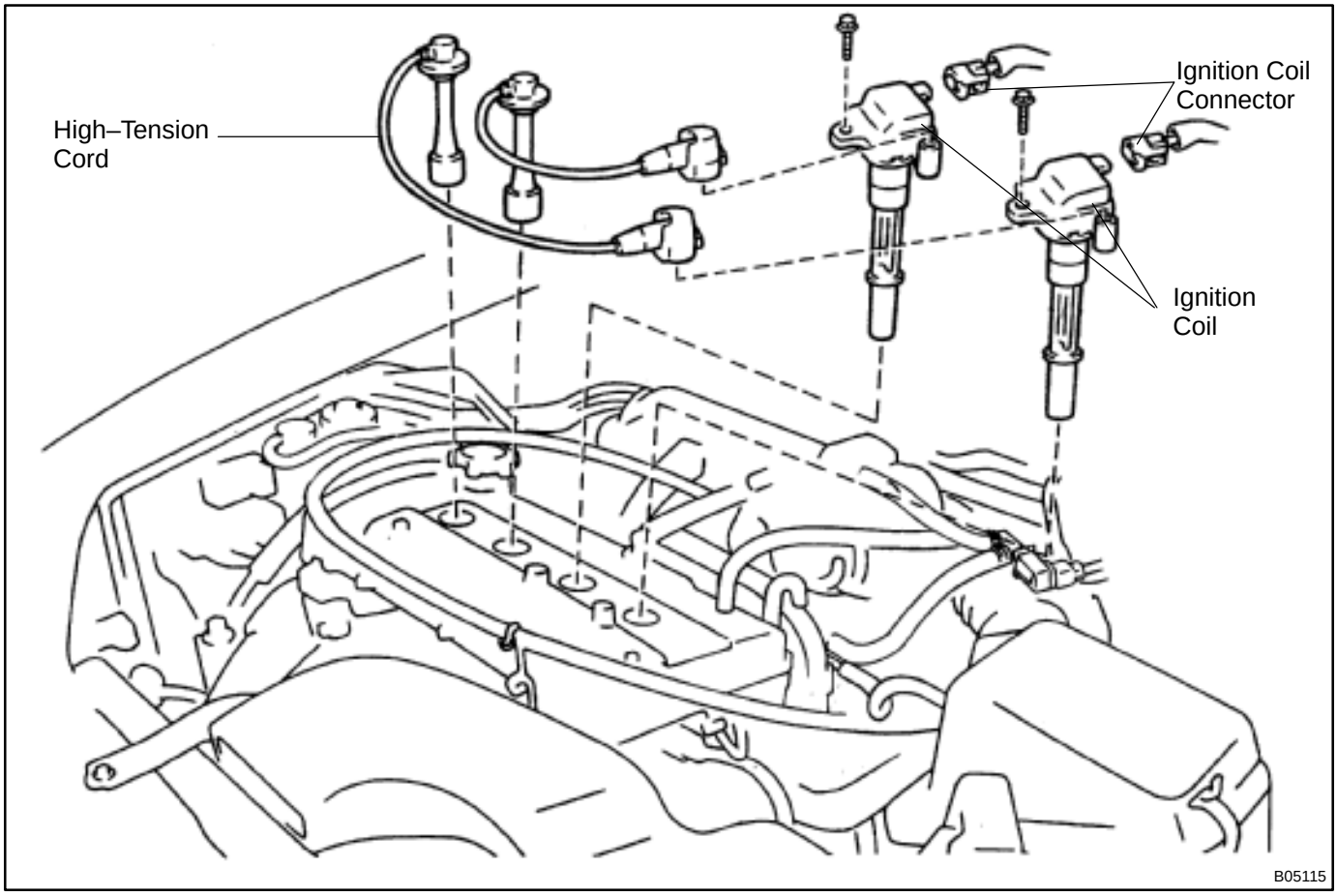

IG08H–01

INSTALLATION

Installation is in the reverse order of removal. (See page IG–7)

IG08G–01

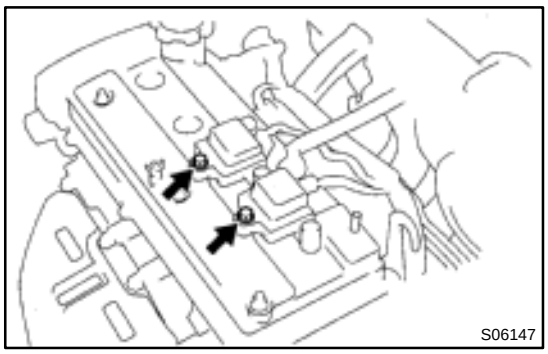

REMOVAL

1. DISCONNECT HIGH–TENSION CORDS FROM IGNITION COILS
(See page IG–1)

2. REMOVE IGNITION COILS

(a) Disconnect the 2 connectors from the ignition coils.

(b) Remove the 2 bolts and 2 ignition coils from cylinder head.
Torque: 8.5 N·m (85 kgf·cm, 70 in.·lbf)

HINT:
Arrange the ignition coils in correct order.

IGNITION SYSTEM

IG08E–05

ON–VEHICLE INSPECTION

NOTICE:

"Cold" and "Hot" in these sentences express the temperature of the coils themselves. "Cold" is from –10˚C (14˚F) to 50˚C (122˚F) and "Hot" is from 50˚C (122˚F) to 100˚C (212˚F).

1. INSPECT SPARK TEST

Check that the spark occurs.

(1) Disconnect the high–tension cord from the spark plug.
(2) Remove the spark plug.
(3) Install the spark plug to the high–tension cord.
(4) Ground the spark plug.
(5) See if spark occurs while engine is being cranked.

NOTICE:

To prevent gasoline from being injected from injectors during this test, crank the engine for no more than 5 – 10 seconds at time. If the spark done not occur, do the test as follows:

SPARK TEST

↓ NO

CHECK CONNECTION OF IGNITION COIL IGNITER → BAD → Connect securely.

↓ OK

CHECK RESISTANCE OF HIGH–TENSION CORD (See step 2)
Maximum resistance: 25 kΩ per cord → BAD → Replace the cord(s).

↓ OK

CHECK POWER SUPPLY TO IGNITION COIL AND IGNITER
1. Turn ignition switch to ON.
2. Check that there is battery voltage at ignition coil positive (+) terminal. → BAD → Check wiring between ignition switch to ignition coil and igniter.

↓ OK

CHECK RESISTANCE OF IGNITION COIL (See step 4)

Resistance:	Cold	Hot
Primary	0.67 – 1.05 kΩ	0.85 – 1.28 kΩ
Secondary	9.3 – 16.0 kΩ	11.7 – 18.8 kΩ

→ BAD → Replace the ignition coil.

↓ OK

CHECK RESISTANCE OF CAMSHAFT POSITION SENSOR (See step 5)

Resistance:	Cold	Hot
	985 – 1,600 Ω	1,265 – 1,890 Ω

→ BAD → Replace the camshaft position sensor.

↓ OK

CHECK RESISTANCE OF CRANKSHAFT POSITION SENSOR (See step 6)

Resistance:	Cold	Hot
	985 – 1,600 Ω	1,265 – 1,890 Ω

→ BAD → Replace the crankshaft position sensor.

↓ OK

CHECK IGT SIGNAL FROM ECM (See page DI–95) → BAD → Check wiring between ECM, ignition coil any then try another ECM.

↓

TRY ANOTHER IGNITION COIL

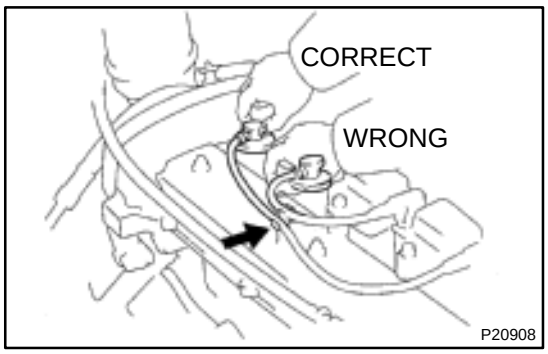

2. INSPECT HIGH–TENSION CORDS

(a) Remove the high–tension cords.

(1) Disconnect the high–tension cords at the rubber boot.

HINT:

Do not pull on the cords.

NOTICE:

Pulling on or bending the cords may damage the conductor inside.

(2) Disconnect the high–tension cords from the clamp.

(3) Using a screwdriver, lift up the lock claw and disconnect the holder from the ignition coils.

(4) Disconnect the high–tension cord at the grommet.

HINT:

Do not pull on the cords.

NOTICE:

Pulling on or bending the cords may damage the conductor inside. Do not wipe any of the oil from the grommet after the high–tension cord is disconnected.

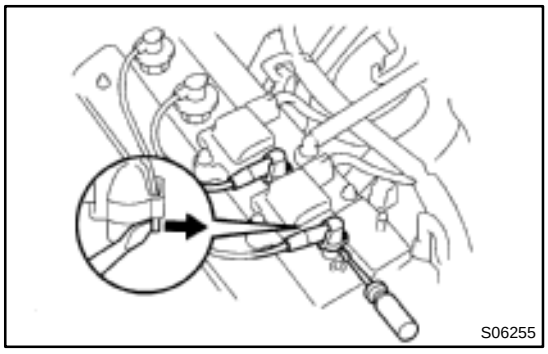

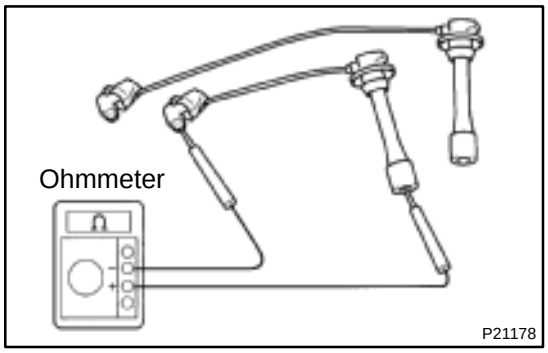

(b) Using an ohmmeter, measure the resistance.

Maximum resistance:

25 kΩ per cord

If the resistance is greater than maximum, check the terminals. If necessary, replace the high–tension cord.

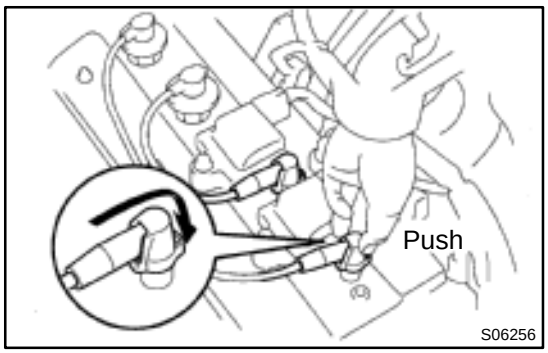

(c) Reinstall the high–tension cords.

(1) Assemble the holder and grommet.

(2) Align the spline of the ignition coil with the spline of the holder, and push in the cord.

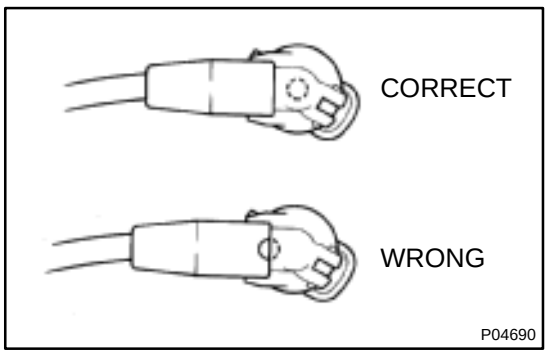

NOTICE:

Check that the holder is correctly installed to the grommet and distributor cap as shown in the illustration.

(3) Check that the lock claw of the holder is engaged by lightly pulling the holder.

(4) Connect the high–tension cords to the clamp.

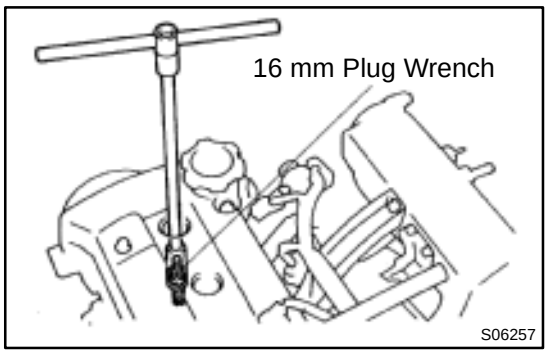

3. INSPECT SPARK PLUGS

(a) Disconnect high–tension cords and ignition coils.

(b) Using a 16 mm plug wrench, remove the 4 spark plugs.

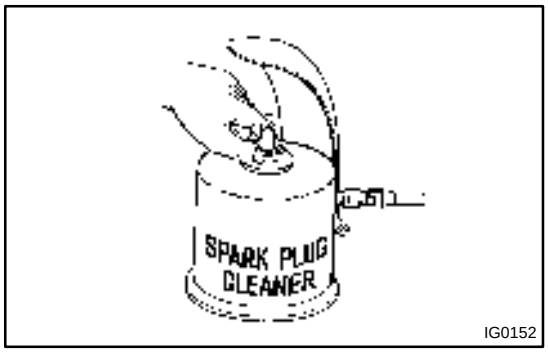

(c) Using a spark plug cleaner or wire brush, clean the spark plug.

If the electrode has traces of wet carbon, allow it to dry and then clean with a spark plug cleaner.

Air pressure:
Below 588 kPa (6 kgf/cm^2, 85 psi)
Duration:
20 seconds or less

HINT:

If there are traces of oil, remove it with gasoline before using the spark plug cleaner.

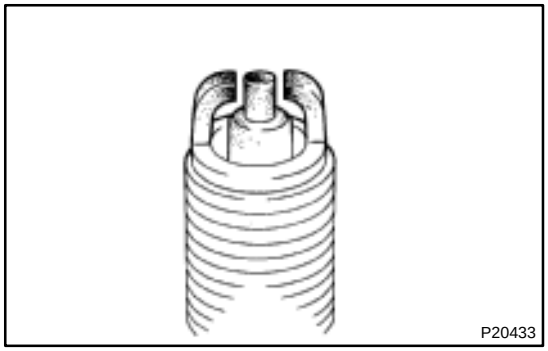

(d) Visually check the spark plug for thread damage and insulator damage.

If abnormal, replace the spark plug.

Recommended spark plug:

DENSO	K16TR11
NGK	BKR5EKB11

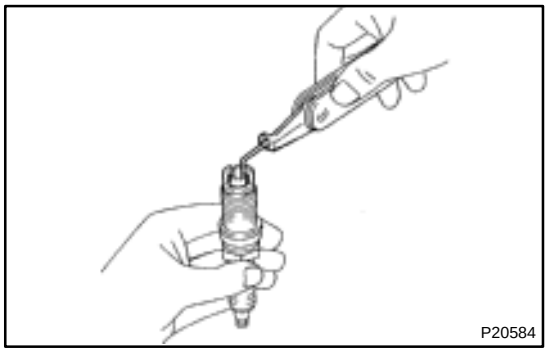

(e) Inspect the electrode gap.
Correct electrode gap:
1.1 mm (0.043 in.)

(f) Using a 16 mm plug wrench, install the spark plugs.
Torque: 18 N·m (180 kgf·cm, 13 ft·lbf)

(g) Reconnect the high–tension cords and ignition coils.

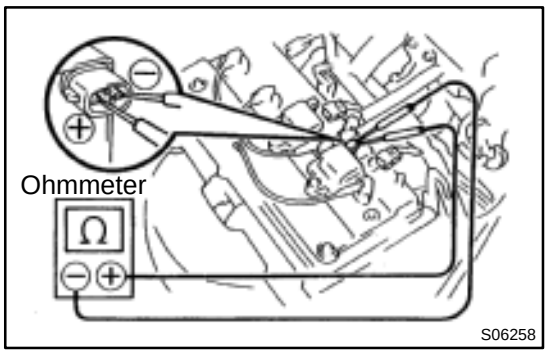

4. INSPECT IGNITION COILS WITH IGNITER

(a) Disconnect the high–tension cords from the ignition coils.

(b) Disconnect ignition coil connectors.

(c) Inspect the primary coil resistance.

Using an ohmmeter, measure the resistance between the positive (+) and negative (–) terminals.

Primary coil resistance :

Cold	0.67 – 1.05 Ω
Hot	0.85 – 1.23 Ω

If the resistance is not as specified, replace the ignition coil.

(d) Remove ignition coils.

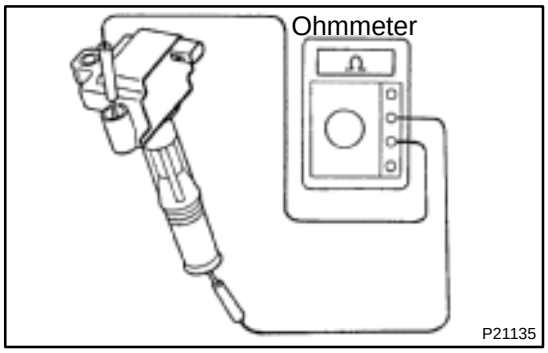

(e) Inspect the secondary coil resistance.

(f) Using an ohmmeter, measure the resistance between the positive (+) and high–tension terminal.

Secondary coil resistance :

Cold	9.3 – 16.0 kΩ
Hot	11.7 – 18.8 kΩ

If the resistance is not as specified, replace the ignition coil.

(g) Reinstall ignition coils

(h) Reconnect ignition coil connectors.

(i) Reconnect high–tension cords to the ignition coils.

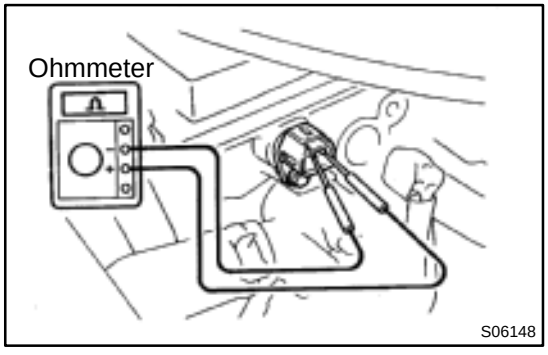

5. CAMSHAFT POSITION SENSOR

(a) Disconnect camshaft position sensor connector.

(b) Inspect camshaft position sensor resistance.

Using an ohmmeter, measure the resistance between terminals.

Resistance:

Cold	985 – 1,600 Ω
Hot	1,265 – 1,890 Ω

If the resistance is not as specified, replace the camshaft position sensor.

(c) Reconnect camshaft position sensor connector.

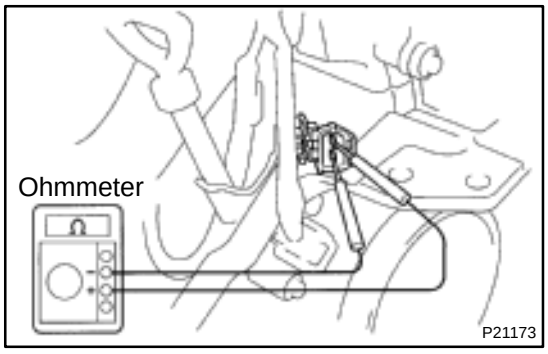

6. CRANKSHAFT POSITION SENSOR

(a) disconnect crankshaft position sensor connector.

(b) Inspect crankshaft position sensor resistance.

Using an ohmmeter, measure the resistance between terminals.

Resistance:

Cold	985 – 1,600 Ω
Hot	1,265 – 1,890 Ω

If the resistance is not as specified, replace the crankshaft position sensor.

(c) Connect crankshaft position sensor connector.

FOR ALL OF VEHICLES

IN041–10

PRECAUTION

1. FOR VEHICLES EQUIPPED WITH SRS AIRBAG

(a) The PASEO is equipped with an SRS (Supplemental Restraint System), such as the driver airbag and front passenger airbag.

Failure to carry out service operations in the correct sequence could cause the supplemental restraint system to unexpectedly deploy during servicing, possibly leading to a serious accident.

Further, if a mistake is made in servicing the supplemental restraint system, it is possible the SRS may fail to operate when required. Before servicing (including removal or installation of parts, inspection or replacement), be sure to read the following items carefully, then follow the correct procedure described in this manual.

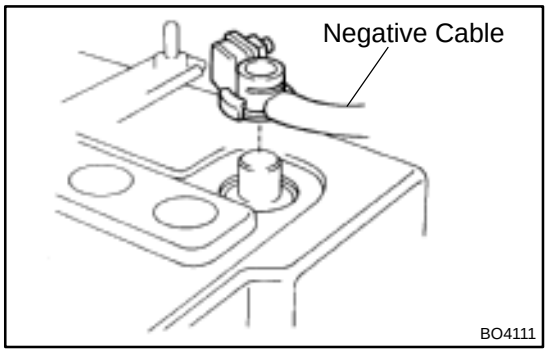

(b) GENERAL NOTICE

(1) Malfunction symptoms of the supplemental restraint system are difficult to confirm, so the diagnostic trouble codes become the most important source of information when troubleshooting. When troubleshooting the supplemental restraint system, always inspect the diagnostic trouble codes before disconnecting the negative (–) terminal cable from the battery (See page DI–211).

(2) Work must be started after 90 seconds from the time the ignition switch is turned to the ”LOCK” position and the negative (–) terminal cable is disconnected from the battery.

(The supplemental restraint system is equipped with a back–up power source so that if work is started within 90 seconds of disconnecting the negative (–) terminal cable from the battery, the SRS may deploy.)

When the negative (–) terminal cable is disconnected from the battery, memory of the clock and audio systems will be cancelled. So before starting work, make a record of the contents memorized by the each memory system. Then when work is finished, reset the clock and audio systems as before.

To avoid erasing the memory of each memory system, never use a back–up power supply from another battery.

(3) Even in cases of a minor collision where the SRS does not deploy, the steering wheel pad and front passenger airbag assembly should be inspected (See page RS–9 and RS–23).
(4) Never use SRS parts from another vehicle. When replacing parts, replace them with new parts.
(5) Before repairs, remove the airbag sensor if shocks are likely to be attached to the sensor during repairs.
(6) Never disassemble and repair the airbag sensor assembly, steering wheel pad and front passenger airbag.
(7) If the airbag sensor assembly, steering wheel pad or front passenger airbag have been dropped, or if there are cracks, dents or other defects in the case, bracket or connector, replace them with new ones.
(8) Do not directly expose the airbag sensor assembly, steering wheel pad or front passenger airbag to hot air or flames.
(9) Use a volt/ohmmeter with high impedance (10 kΩ/V minimum) for troubleshooting of the electrical circuit.
(10) Information labels are attached to the periphery of the SRS components. Follow the instructions on the notices.
(11) After work is completed, check the SRS warning light for the supplemental restraint system (See page DI–211).

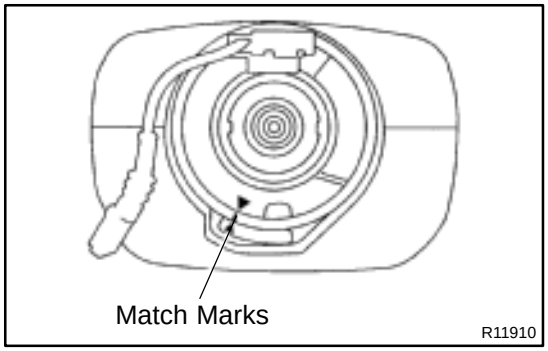

(c) SPIRAL CABLE (in Combination Switch)
The steering wheel must be fitted correctly to the steering column with the spiral cable at the neutral position, otherwise cable disconnection and other troubles may result. Refer to RS–20 of this manual concerning correct steering wheel installation.

(d) STEERING WHEEL PAD (with Airbag)

(1) When removing the steering wheel pad or handling a new steering wheel pad, it should be placed with the pad top surface facing up.
Storing the pad with its metallic surface facing upward may lead to a serious accident if the airbag deploys for some reason. In addition do not store a steering wheel pad on top of another one.

(2) Never measure the resistance of the airbag squib. (This may cause the airbag to deploy, which is very dangerous.)

(3) Grease should not be attached to the steering wheel pad and the pad should not be cleaned with detergents of any kind.

(4) Store the steering wheel pad where the ambient temperature remains below 93˚C (200˚F), without high humidity and away from electrical noise.

(5) When using electric welding, first disconnect the airbag connector (yellow color and 2 pins) under the steering column near the combination switch connector before starting work.

(6) When disposing of a vehicle or the steering wheel pad alone, the airbag should be deployed using an SST before disposal (See page RS–11).
Carry out the operation in a safe place away from electrical noise.

Example:

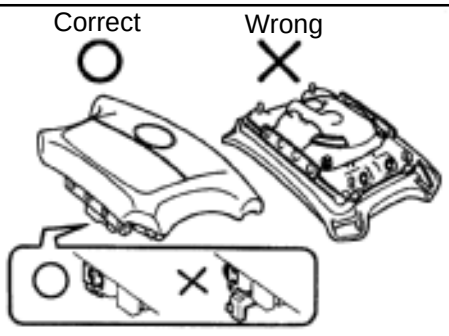

Example:

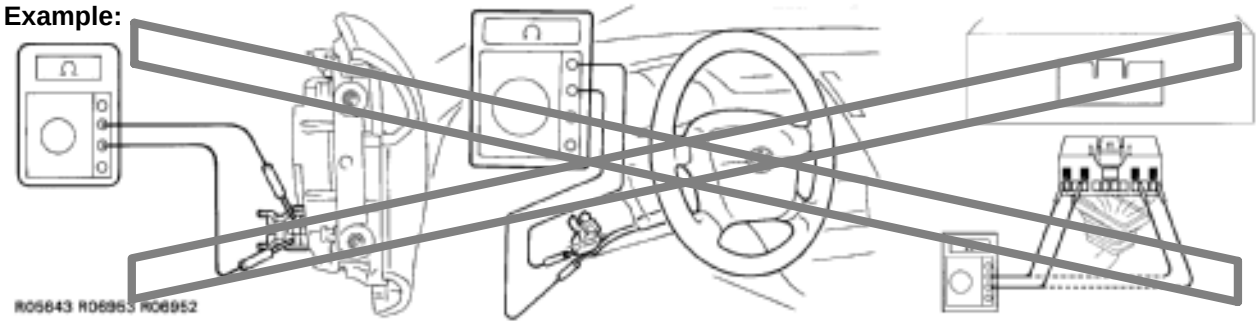

(e) FRONT PASSENGER AIRBAG ASSEMBLY

(1) Always store a removed or new front passenger airbag assembly with the airbag deployment direction facing up.
Storing the airbag assembly with the airbag deployment direction facing down could cause a serious accident if the airbag deploys.

(2) Never measure the resistance of the airbag squib. (This may cause the airbag to deploy, which is very dangerous.)

(3) Grease should not be attached to the front passenger airbag assembly and the airbag door should not be cleaned with detergents of any kind.

(4) Store the airbag assembly where the ambient temperature remains below 93˚C (200˚F), without high humidity and away from electrical noise.

(5) When using electric welding, first disconnect the airbag connector (yellow color and 2 pins) installed on the assembly before starting work.

(6) When disposing of a vehicle or the airbag assembly alone, the airbag should be deployed using an SST before disposal (See page RS–25).
Perform the operation in a safe place away from electrical noise.

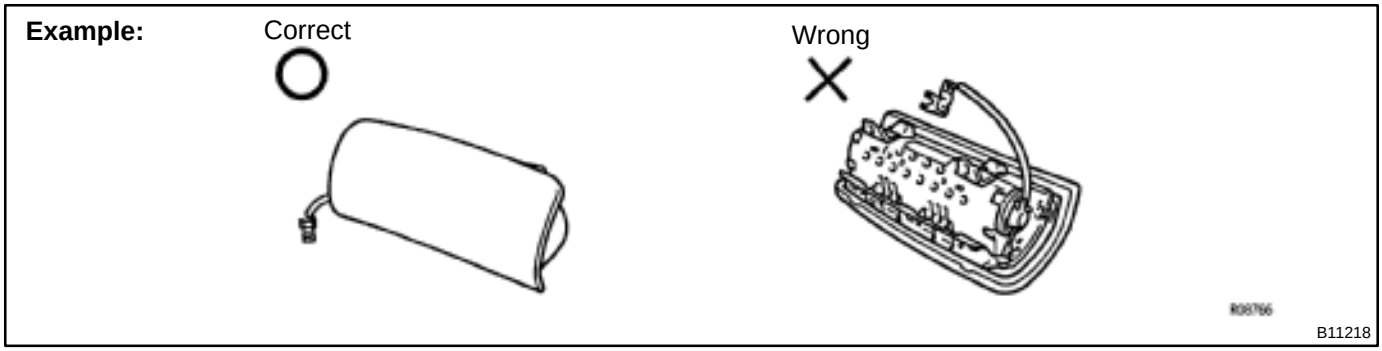

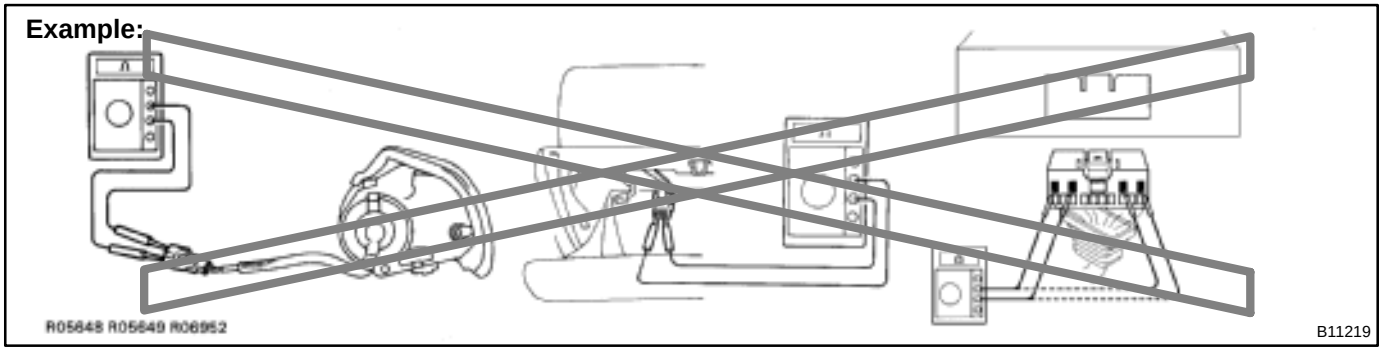

(f) AIRBAG SENSOR ASSEMBLY

(1) Never reuse the airbag sensor assembly involved in a collision when the SRS has deployed.

(2) The connectors to the airbag sensor assembly should be connected or disconnected with the sensor mounted on the floor. If the connectors are connected or disconnected while the airbag sensor assembly is not mounted to the floor, it could cause undesired deployment of the supplemental restraint system.

(3) Work must be started after 90 seconds from the time the ignition switch is turned to the ”LOCK” position and the negative (–) terminal cable is disconnected from the battery, even if only loosing the set bolts of the airbag sensor assembly.

(g) WIRE HARNESS AND CONNECTOR

The SRS wire harness is integrated with the instrument panel wire harness assembly and floor wire harness assembly. The wires for the SRS wire harness are encased in a yellow corrugated tube. All the connectors for the system are also a standard yellow color. If the SRS wire harness becomes disconnected or the connector becomes broken due to an accident, etc., repair or replace it as shown on page RS–38.

2. FOR VEHICLES EQUIPPED WITH A CATALYTIC CONVERTER

CAUTION:

If large amount of unburned gasoline flows into the converter, it may overheat and create a fire hazard. To prevent this, observe the following precautions and explain them to your customer.

(a) Use only unleaded gasoline.

(b) Avoid prolonged idling.
Avoid running the engine at idle speed for more than 20 minutes.

(c) Avoid spark jump test.
(1) Perform spark jump test only when absolutely necessary. Perform this test as rapidly as possible.
(2) While testing, never race the engine.

(d) Avoid prolonged engine compression measurement.
Engine compression tests must be done as rapidly as possible.

(e) Do not run engine when fuel tank is nearly empty.
This may cause the engine to misfire and create an extra load on the converter.

(f) Avoid coasting with ignition turned off.

(g) Do not dispose of used catalyst along with parts contaminated with gasoline or oil.

3. IF VEHICLE IS EQUIPPED WITH MOBILE COMMUNICATION SYSTEM

For vehicles with mobile communication systems such as two–way radios and cellular telephones, observe the following precautions.

(a) Install the antenna as far as possible away from the ECU and sensors of the vehicle's electronic system.

(b) Install the antenna feeder at least 20 cm (7.87 in.) away from the ECU and sensors of the vehicle's electronic systems. For details about ECU and sensors locations, refer to the section on the applicable component.

(c) Do not wind the antenna feeder together with the other wiring as much as possible, also avoid running the antenna feeder parallel with other wire harnesses.

(d) Check that the antenna and feeder are correctly adjusted.

(e) Do not install powerful mobile communications system.

4. FOR USING OBD II SCAN TOOL OR TOYOTA HAND–HELD TESTER

CAUTION:

Observe the following items for safety reasons:

- **Before using the OBD II scan tool or TOYOTA hand–held tester, the OBD II scan tool's instruction book or TOYOTA hand–held tester's operator manual should be read thoroughly.**
- **Be sure to route all cables securely when driving with the OBD II scan tool or TOYOTA hand–held tester connected to the vehicle. (i.e. Keep cables away from feet, pedals, steering wheel and shift lever.)**
- **Two persons are required when test driving with the OBD II scan tool or TOYOTA hand–held tester, one person to drive the vehicle and the other person to operate the OBD II scan tool or TOYOTA hand–held tester.**

HOW TO TROUBLESHOOT ECU CONTROLLED SYSTEMS

IN042–04

GENERAL INFORMATION

A large number of ECU controlled systems are used in the PASEO. In general, the ECU controlled system is considered to be a very intricate system requiring a high level of technical knowledge and expert skill to troubleshoot. However, the fact is that if you proceed to inspect the circuits one by one, troubleshooting of these systems is not complex. If you have adequate understanding of the system and a basic knowledge of electricity, accurate diagnosis and necessary repair can be performed to locate and fix the problem. This manual is designed through emphasis of the above standpoint to help service technicians perform accurate and effective troubleshooting, and is compiled for the following major ECU controlled systems:
The troubleshooting procedure and how to make use of it are described on the following pages.

System	Page
1. Engine	DI–1
2. Automatic Transaxle	DI–124
3. Anti–Lock Brake System	DI–171
4. Supplemental Restraint System	DI–209
5. Theft Deterrent System	DI–265
6. Cruise Control System	DI–299

FOR USING OBDII SCAN TOOL OR TOYOTA HAND–HELD TESTER

- Before using the OBDII scan tool or TOYOTA hand–held tester, the OBDII scan tool's instruction book or TOYOTA hand–held tester's operator manual should be read thoroughly.
- If the OBDII scan tool or TOYOTA hand–held tester cannot communicate with ECU controlled systems when you have connected the cable of the OBDII scan tool or TOYOTA hand–held tester to DLC3, turned the ignition switch ON and operated the scan tool, there is a problem on the vehicle side or tool side.
  (1) If communication is normal when the tool is connected to another vehicle, inspect the diagnosis data link line (Bus⊕line) or ECU power circuit of the vehicle.
  (2) If communication is still not possible when the tool is connected to another vehicle, the problem is probably in the tool itself, so perform the Self Test procedures outline in the Tester Operator's Manual.

IN043–06

HOW TO PROCEED WITH TROUBLESHOOTING

Carry out troubleshooting in accordance with the procedure on the following page. Here, only the basic procedure is shown. Details are provided in Diagnostics section, showing the most effective methods for each circuit. Confirm the troubleshooting procedures first for the relevant circuit before beginning troubleshooting of that circuit.

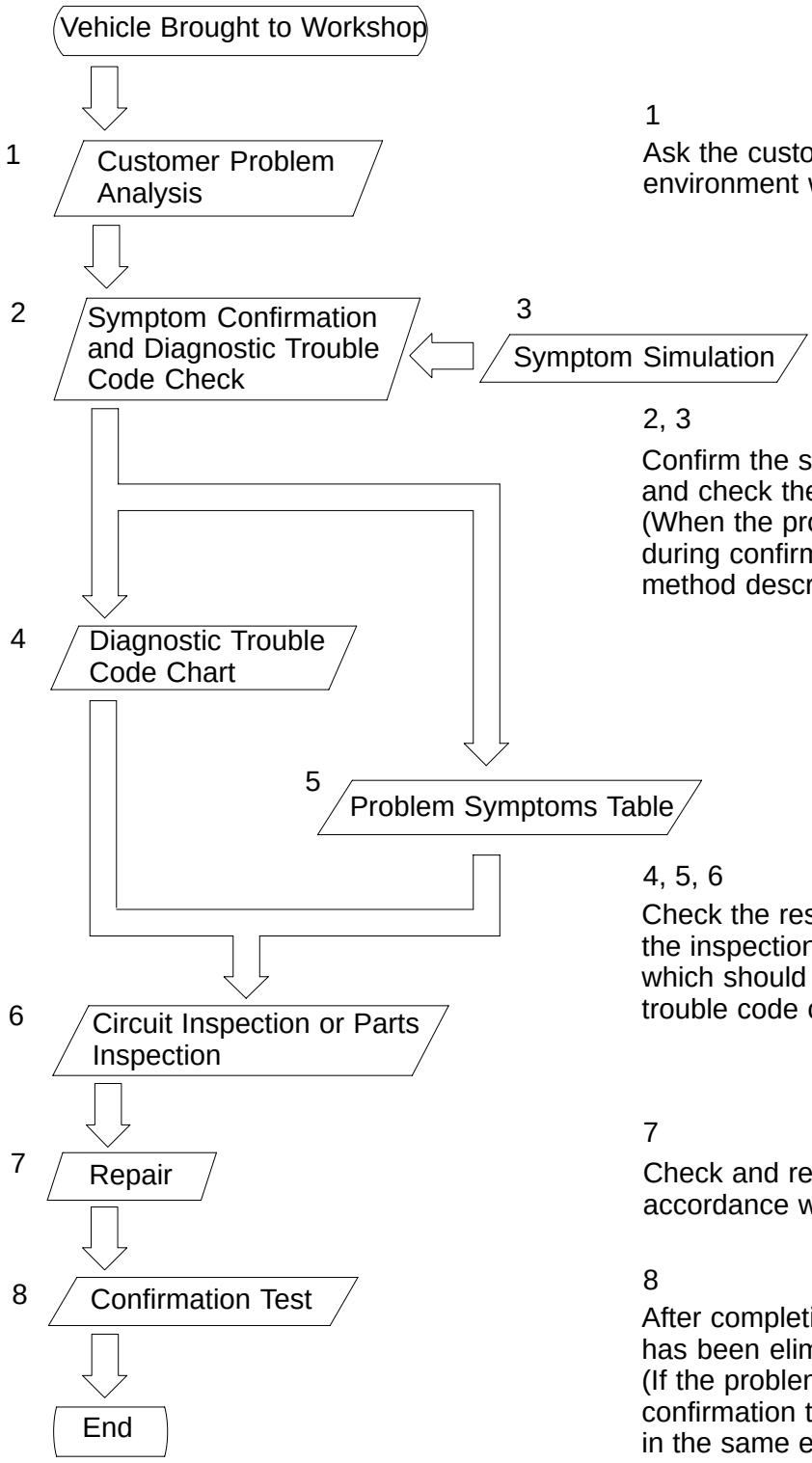

1

Ask the customer about the conditions and the environment when the problem occurred.

2, 3

Confirm the symptoms and the problem conditions, and check the diagnostic trouble codes.
(When the problem symptoms do not appear during confirmation, use the symptom simulation method described later on.)

4, 5, 6

Check the results obtained in Step 2, then confirm the inspection procedure for the system or the part which should be checked using the diagnostic trouble code chart or the problem symptoms table.

7

Check and repair the affected system or part in accordance with the instructions in Step 6.

8

After completing repairs, confirm that the problem has been eliminated.
(If the problem is not reproduced, perform the confirmation test under the same conditions and in the same environment as when it occurred for the first time.)

1. CUSTOMER PROBLEM ANALYSIS

In troubleshooting, the problem symptoms must be confirmed accurately and all preconceptions must be cleared away in order to give an accurate judgment. To ascertain just what the problem symptoms are, it is extremely important to ask the customer about the problem and the conditions at the time it occurred.

Important Point in the Problem Analysis:

The following 5 items are important points in the problem analysis. Past problems which are thought to be unrelated and the repair history, etc. may also help in some cases, so as much information as possible should be gathered and its relationship with the problem symptoms should be correctly ascertained for reference in troubleshooting. A customer problem analysis table is provided in Diagnostics section for each system for your use.

Important Points in the Customer Problem Analysis

- What ——— Vehicle model, system name
- When ——— Date, time, occurrence frequency
- Where ——— Road conditions
- Under what conditions? ——— Running conditions, driving conditions, weather conditions
- How did it happen? ——— Problem symptoms

(Sample) Engine control system check sheet.

CUSTOMER PROBLEM ANALYSIS CHECK

ENGINE CONTROL SYSTEM Check Sheet

Inspector's Name _____

Customer's Name		**Model and Model Year**	
Driver's Name		**Frame No.**	
Data Vehicle Brought in		**Engine Model**	
License No.		**Odometer Reading**	km miles

Problem Symptoms	☐ **Engine does not Start**	☐ **Engine does not crank** ☐ **No initial combustion** ☐ **No complete combustion**
	☐ **Difficult to Start**	☐ **Engine cranks slowly** ☐ **Other** _____
	☐ **Poor Idling**	☐ **Incorrect first idle** ☐ **Idling rpm is abnormal** ☐ **High (rpm)** ☐ **Low (rpm)** ☐ **Rough idling** ☐ **Other** _____
	☐ **Poor Drive ability**	☐ **Hesitation** ☐ **Back fire** ☐ **Muffler explosion (after–fire)** ☐ **Surging** ☐ **Knocking** ☐ **Other** _____
	☐ **Engine Stall**	☐ **Soon after starting** ☐ **After accelerator pedal depressed** ☐ **After accelerator pedal released** ☐ **During A/C operation** ☐ **Shifting from N to D** ☐ **Other** _____
	☐ **Others**	

☐ **onstant** ☐ **Sometimes (times per day/month)**

2. SYMPTOM CONFIRMATION AND DIAGNOSTIC TROUBLE CODE CHECK

The diagnostic system in the PASEO fulfills various functions. The first function is the Diagnostic Trouble Code Check in which a malfunction in the signal circuits to the ECU is stored in code in the ECU memory at the time of occurrence, to be output by the technician during troubleshooting. Another function is the Input Signal Check which checks if the signals from various switches are sent to the ECU correctly.
By using these check functions, the problem areas can be narrowed down quickly and troubleshooting can be performed effectively. Diagnostic functions are incorporated in the following systems in the PASEO.

System	Diagnostic Trouble Code Check	Input Signal Check (Sensor Check)	Other Diagnosis Function
Engine	○(with Test Mode)	○	
Automatic Transaxle	○(with Test Mode)	○	
Anti–lock Brake System	○	○	
Supplemental Restraint System	○		
Cruise Control System	○	○	

In diagnostic trouble code check, it is very important to determine whether the problem indicated by the diagnostic trouble code is still occurring or occurred in the past but returned to normal at present. In addition, it must be checked in the problem symptom check whether the malfunction indicated by the diagnostic trouble code is directly related to the problem symptom or not. For this reason, the diagnostic trouble codes should be checked before and after the symptom confirmation to determine the current conditions, as shown in the table below. If this is not done, it may, depending on the case, result in unnecessary troubleshooting for normally operating systems, thus making it more difficult to locate the problem, or in repairs not pertinent to the problem. Therefore, always follow the procedure in correct order and perform the diagnostic trouble code check.

DIAGNOSTIC TROUBLE CODE CHECK PROCEDURE

Diagnostic Trouble Code Check (Make a note of and then clear)	**Confirmation of Symptoms**	**Diagnostic Trouble Code Check**	**Problem Condition**
Diagnostic Trouble Code Display	Problem symptoms exist	Same diagnostic trouble code is displayed	Problem is still occurring in the diagnostic circuit
⇨		Normal code is displayed	The problem is still occurring in a place other than in the diagnostic circuit (The diagnostic trouble code displayed first is either for a past problem or it is a secondary problem)
⇨	No problem symptoms exist		The problem occurred in the diagnostic circuit in the past
Normal Code Display ⇨	Problem symptoms exist	Normal code is displayed	The problem is still occurring in a place other than in the diagnostic circuit
⇨	No problem symptoms exist	Normal code is displayed	The problem occurred in a place other than in the diagnostic circuit in the past

Taking into account the above points, a flow chart showing how to proceed with troubleshooting using the diagnostic trouble code check is shown below. This flow chart shows how to utilize the diagnostic trouble code check effectively, then by carefully checking the results, indicates how to proceed either to diagnostic trouble code troubleshooting or to troubleshooting of problem symptoms.

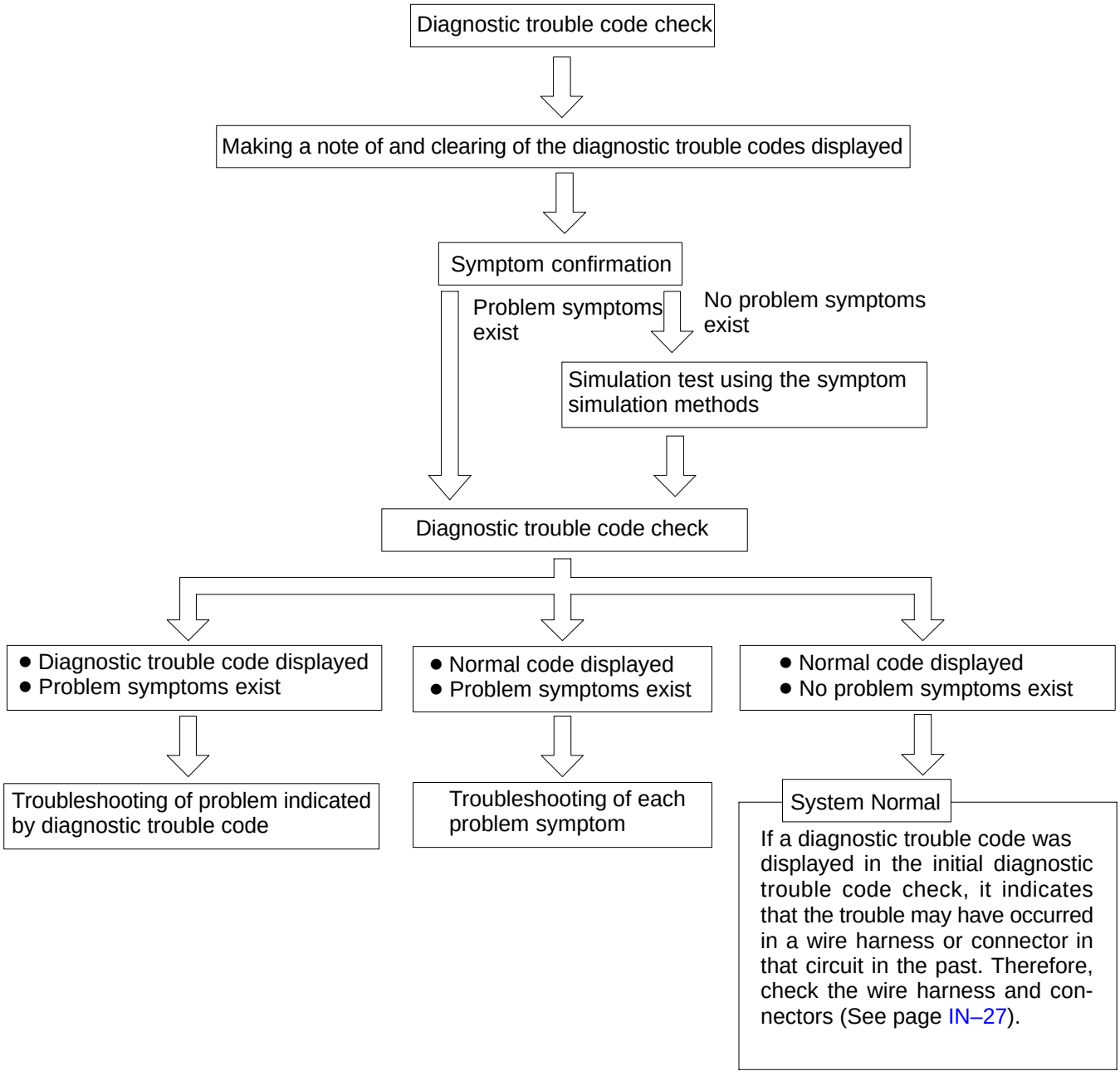

3. SYMPTOM SIMULATION

The most difficult case in troubleshooting is when there are no problem symptoms occurring. In such cases, a thorough customer problem analysis must be carried out, then simulate the same or similar conditions and environment in which the problem occurred in the customer's vehicle. No matter how you are experienced or skilled, if you proceed to troubleshoot without confirming the problem symptoms you will tend to overlook something important in the repair operation and make a wrong guess somewhere, which will only lead to a standstill. For example, for a problem which only occurs when the engine is cold, or for a problem which occurs due to vibration caused by the road during driving, etc., the problem can never be determined so long as the symptoms are confirmed with the engine hot condition or the vehicle at a standstill. Since vibration, heat or water penetration (moisture) is likely cause for problem which is difficult to reproduce, the symptom simulation tests introduced here are effective measures in that the external causes are applied to the vehicle in a stopped condition.

Important Points in the Symptom Simulation Test:

In the symptom simulation test, the problem symptoms should of course be confirmed, but the problem area or parts must also be found out. To do this, narrow down the possible problem circuits according to the symptoms before starting this test and connect a tester beforehand. After that, carry out the symptom simulation test, judging whether the circuit being tested is defective or normal and also confirming the problem symptoms at the same time. Refer to the problem symptoms table for each system to narrow down the possible causes of the symptom.

1	**VIBRATION METHOD: When vibration seems to be the major cause.**
CONNECTORS Slightly shake the connector vertically and horizontally. **WIRE HARNESS** Slightly shake the wire harness vertically and horizontally. The connector joint, fulcrum of the vibration, and body through portion are the major areas to be checked thoroughly.	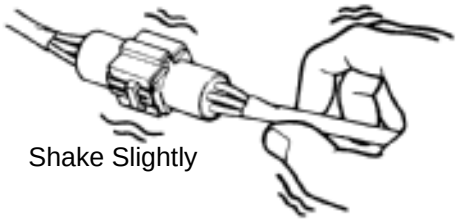 Shake Slightly 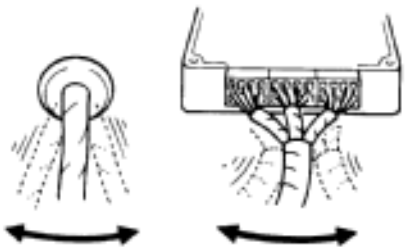 Swing Slightly FI2331 FI2332
PARTS AND SENSOR Apply slight vibration with a finger to the part of the sensor considered to be the problem cause and check that the malfunction occurs. HINT: Applying strong vibration to relays may result in open relays.	Vibrate Slightly 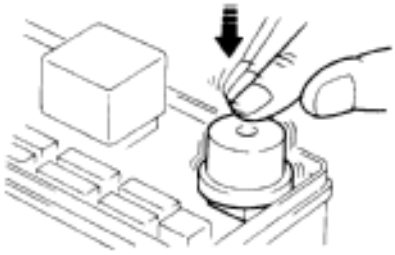 FI2330

V07268

2	**HEAT METHOD: When the problem seems to occur when the suspect area is heated.**
Heat the component that is the likely cause of the malfunction with a hair dryer or similar object. Check to see if the malfunction occurs. **NOTICE:** **(1) Do not heat to more than 60 ˚C (140 ˚F). (Temperature is limited not to damage the components.)** **(2) Do not apply heat directly to parts in the ECU.**	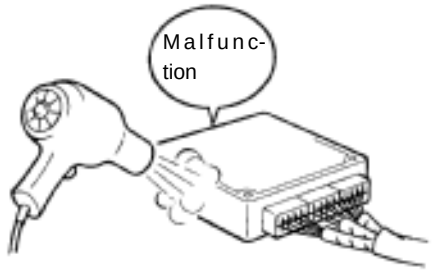 FI2334
3	**WATER SPRINKLING METHOD: When the malfunction seems to occur on a rainy day or in a high–humidity condition.**
Sprinkle water onto the vehicle and check to see if the malfunction occurs. **NOTICE:** **(1) Never sprinkle water directly into the engine compartment, but indirectly change the temperature and humidity by applying water spray onto the radiator front surface.** **(2) Never apply water directly onto the electronic components.** HINT: If a vehicle is subject to water leakage, the leaked water may contaminate the ECU. When testing a vehicle with a water leakage problem, special caution must be taken.	 FI6649
4	**OTHER: When a malfunction seems to occur when electrical load is excessive.**
Turn on all electrical loads including the heater blower, head lights, rear window defogger, etc. and check to see if the malfunction occurs.	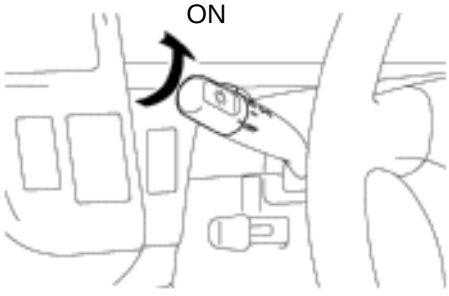 B02389

B02390

4. DIAGNOSTIC TROUBLE CODE CHART

The inspection procedure is shown in the table below. This table permits efficient and accurate troubleshooting using the diagnostic trouble codes displayed in the diagnostic trouble code check. Proceed with troubleshooting in accordance with the inspection procedure given in the diagnostic chart corresponding to the diagnostic trouble codes displayed. The engine diagnostic trouble code chart is shown below as an example.

- DTC No.
  Indicates the diagnostic trouble code.
- Page or Instructions
  Indicates the page where the inspection procedure for each circuit is to be found, or gives instructions for checking and repairs.

- Trouble Area
  Indicates the suspect area of the problem.

- Detection Item
  Indicates the system of the problem or contents of the problem.

DTC CHART (SAE Controlled)

HINT:
Parameters listed in the chart may not be exactly the same as your reading due to the type of instrument or other factors.

If a malfunction code is displayed during the DTC check mode, check the circuit for that code listed in the table below. For details of each code, turn to the page referred to under the "See page" for the respective "DTC No." in the DTC chart.

DTC No. (See page)	Detection Item	Trouble Area	MIL*	Memory
P0100 (DI–24)	Mass Air Flow Circuit Malfunction	● Open or short in mass air flow meter circuit ● Mass air flow meter ● ECM	○	○
P0101 (DI–28)	Mass Air Flow Circuit Range/ Performance Problem	● Mass air flow meter	○	○
P0110 (DI–29)	Intake Air Temp. Circuit Malfunction	● Open or short in intake air temp. sensor circuit ● Intake air temp. sensor ● ECM	○	○
P0115 (DI–33)	Engine Coolant Temp. Circuit Malfunction	● Open or short in engine coolant temp. sensor circuit ● Engine coolant temp. sensor ● ECM	○	○
P0116 (DI–37)	Engine Coolant Temp. Circuit Range/ Performance Problem	● Engine coolant temp. sensor ● Cooling system	○	○
	/Pedal Position Sensor/Switch unction	● Open or short in throttle position sensor circuit ● Throttle position sensor ● ECM		
	osition Sensor/ Switch rformance Prob-	● Throttle position sensor		

5. PROBLEM SYMPTOMS TABLE

The suspected circuits or parts for each problem symptom are shown in the table below. Use this table to troubleshoot the problem when a ”Normal” code is displayed in the diagnostic trouble code check but the problem is still occurring. Numbers in the table indicate the inspection order in which the circuits or parts should be checked.

HINT:

When the problem is not detected by the diagnostic system even though the problem symptom is present, it is considered that the problem is occurring outside the detection range of the diagnostic system, or that the problem is occurring in a system other than the diagnostic system.

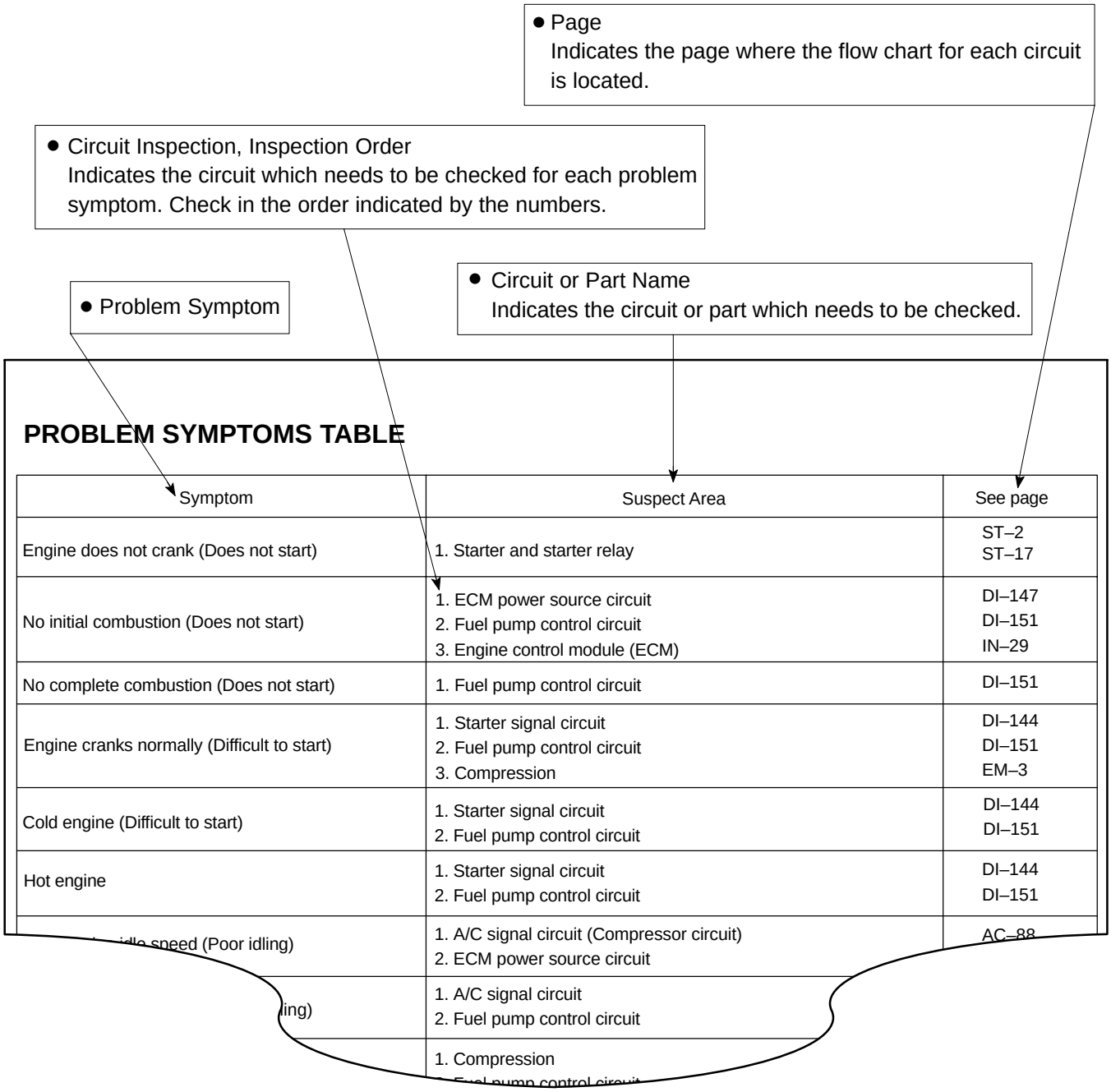

PROBLEM SYMPTOMS TABLE

Symptom	Suspect Area	See page
Engine does not crank (Does not start)	1. Starter and starter relay	ST–2 ST–17
No initial combustion (Does not start)	1. ECM power source circuit 2. Fuel pump control circuit 3. Engine control module (ECM)	DI–147 DI–151 IN–29
No complete combustion (Does not start)	1. Fuel pump control circuit	DI–151
Engine cranks normally (Difficult to start)	1. Starter signal circuit 2. Fuel pump control circuit 3. Compression	DI–144 DI–151 EM–3
Cold engine (Difficult to start)	1. Starter signal circuit 2. Fuel pump control circuit	DI–144 DI–151
Hot engine	1. Starter signal circuit 2. Fuel pump control circuit	DI–144 DI–151
idle speed (Poor idling)	1. A/C signal circuit (Compressor circuit) 2. ECM power source circuit	AC–88
ling)	1. A/C signal circuit 2. Fuel pump control circuit	
	1. Compression 2. Fuel pump control circuit	

6. CIRCUIT INSPECTION

How to read and use each page is shown below.

● Diagnostic Trouble Code No. and Detection Item

● Circuit Description
The major role and operation, etc. of the circuit and its component parts are explained.

DTC	P0325	Knock Sensor 1 Circuit Malfunction

CIRCUIT DESCRIPTION

Knock sensor is fitted to the cylinder block to detect engine knocking. This sensor contains a piezoelectric element which generates a voltage when it becomes deformed, which occurs when the cylinder block vibrates due to knocking. If engine knocking occurs, ignition timing is retarded to suppress it.

DTC No.	DTC Detecting Condition	Trouble Area
P0325	No knock sensor 1 signal to ECM with engine speed, 1,200 rpm or more.	● Open or short in knock sensor1 circuit ● Knock sensor 1 (looseness) ● ECM

If the ECM detects the above diagnosis conditions, it operates the fail safe function in which the corrective retard angle value is set to the maximum value.

● Indicates the diagnostic trouble code, diagnostic trouble code set parameter and suspect area of the problem.

WIRING DIAGRAM

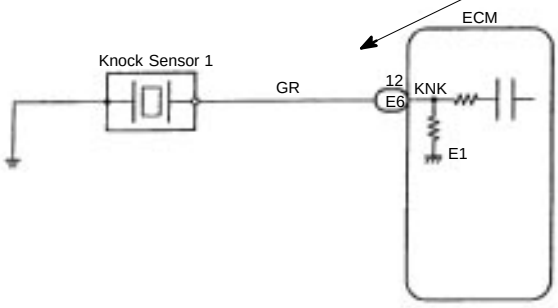

● Wiring Diagram
This shows a wiring diagram of the circuit.
Use this diagram together with ELECTRICAL WIRING DIAGRAM to thoroughly understand the circuit.
Wire colors are indicated by an alphabetical code.
B = Black, L = Blue, R = Red, BR = Brown,
LG = Light Green, V = Violet, G = Green,
O = Orange, W = White, GR = Gray, P = Pink,
Y = Yellow
The first letter indicates the basic wire color and the second letter indicates the color of the stripe.

V08423

● Indicates the position of the ignition switch during the check.

LOCK
Ignition Switch LOCK (OFF)

START
Ignition Switch START

ON
Ignition Switch ON

ACC
Ignition Switch ACC

● Inspection Procedure
Use the inspection procedure to determine if the circuit is normal or abnormal, and if it is abnormal, use it to determine whether the problem is located in the sensors, actuators, wire harness or ECU.

INSPECTION PROCEDURE

1 **Check continuity between terminal KNK of ECM connector and body ground.**

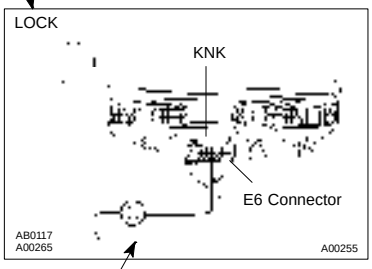

PREPARATION:
(a) Remove the glove compartment (See page SF–68).
(b) Disconnect the E6 connector of ECM.

CHECK:
Measure resistance between terminal KNK of ECM connector and body ground.

OK:
Resistance: 1 MΩ or higher

OK → **Go to step 3.**

NG

2 **Check knock sensor (See page SF–61).**

OK → **Replace knock sensor.**

● Indicates the place to check the voltage or resistance.
● Indicates the connector position to be checked, from the front or back side.



Check from the connector back side. (with harness)



Check from the connector front side. (without harness)
In this case, care must be taken not to bend the terminals.

● Indicates the condition of the connector of ECU during the check.

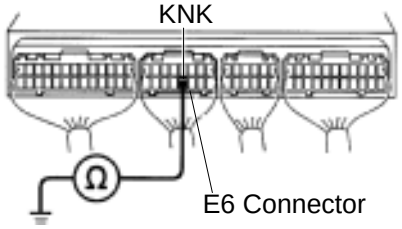

Connector being checked is connected.

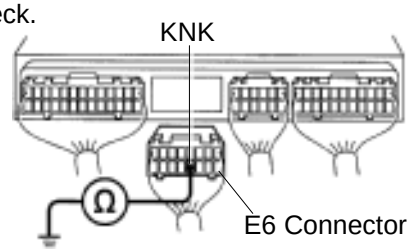

Connector being checked is disconnected.

V08425

IN011–03

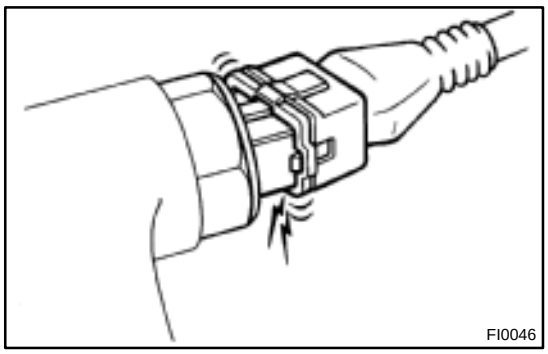
FI0046

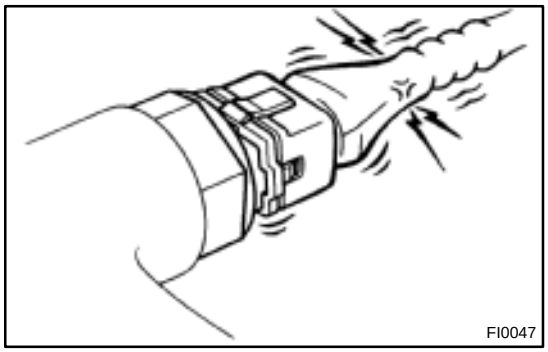
FI0047

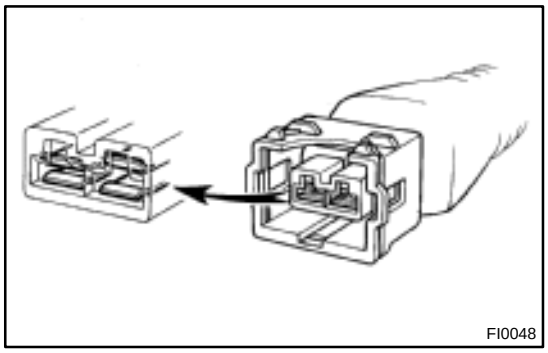
FI0048

HOW TO USE THE DIAGNOSTIC CHART AND INSPECTION PROCEDURE

1. CONNECTOR CONNECTION AND TERMINAL INSPECTION

- For troubleshooting, diagnostic trouble code charts or problem symptom charts are provided for each circuit with detailed inspection procedures on the following pages.
- When all the component parts, wire harnesses and connectors of each circuit except the ECU are found to be normal in troubleshooting, then it is determined that the problem is in the ECU. Accordingly, if diagnosis is performed without the problem symptoms occurring, refer to Step 8 to replace the ECU. So always confirm that the problem symptoms are occurring, or proceed with inspection while using the symptom simulation method.
- The instructions ”Check wire harness and connector” and ”Check and replace ECU” which appear in the inspection procedure, are common and applicable to all diagnostic trouble codes. Follow the procedure outlined below whenever these instructions appear.

OPEN CIRCUIT:

This could be due to a disconnected wire harness, faulty contact in the connector, and a connector terminal pulled out, etc.

HINT:

- It is rarely the case that a wire is broken in the middle of it. Most cases occur at the connector. In particular, carefully check the connectors of sensors and actuators
- Faulty contact could be due to rusting of the connector terminals, to foreign materials entering terminals or a deformation of connector terminals. Simply disconnecting and reconnecting the connectors once changes the condition of the connection and may result in a return to normal operation. Therefore, in troubleshooting, if no abnormality is found in the wire harness and connector check, but the problem disappears after the check, then the cause is considered to be in the wire harness or connectors.

SHORT CIRCUIT:

This could be due to a contact between wire harness and the body ground or to a short circuit occurred inside the switch, etc.

HINT:

When there is a short between the wire harness and body ground, check thoroughly whether the wire harness is caught in the body or is clamped properly.

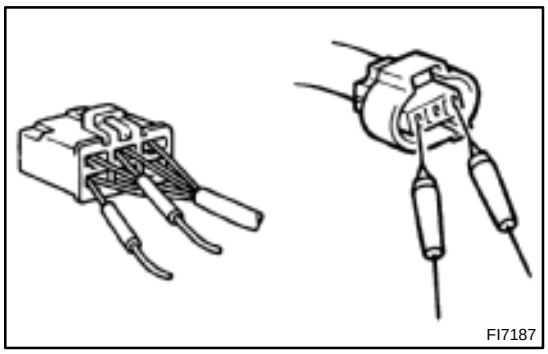
FI7187

2. CONNECTOR HANDLING

When inserting tester probes into a connector, insert them from the rear of the connector. When necessary, use mini test leads. For water resistant connectors which cannot be accessed from behind, take good care not to deform the connector terminals.

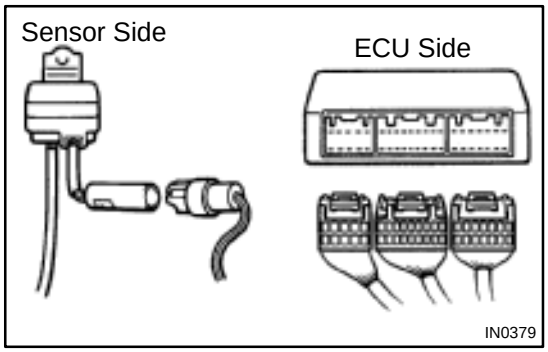

IN0379

3. CONTINUITY CHECK (OPEN CIRCUIT CHECK)

(a) Disconnect the connectors at both ECU and sensor sides.

(b) Measure the resistance between the applicable terminals of the connectors.

Resistance: 1 Ω or less

HINT:

Measure the resistance while lightly shaking the wire harness vertically and horizontally.

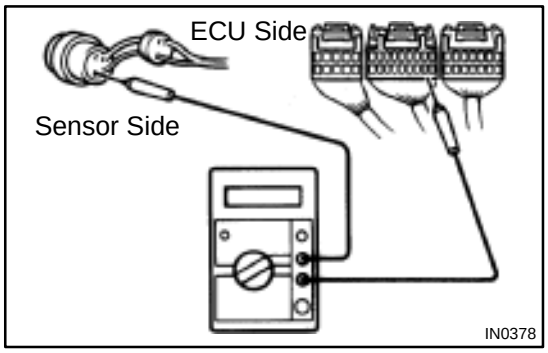

IN0378

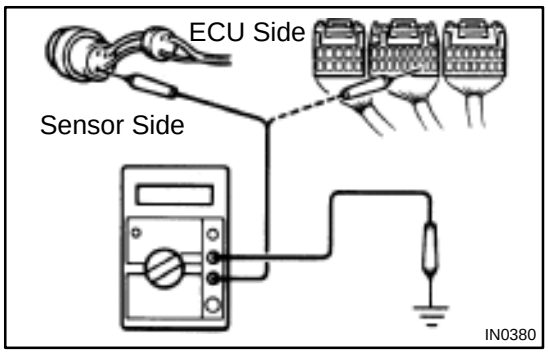

IN0380

4. RESISTANCE CHECK (SHORT CIRCUIT CHECK)

(a) Disconnect the connectors on both ends.

(b) Measure the resistance between the applicable terminals of the connectors and body ground. Be sure to carry out this check on the connectors on both ends.

Resistance: 1 MΩ or higher

HINT:

Measure the resistance while lightly shaking the wire harness vertically and horizontally.

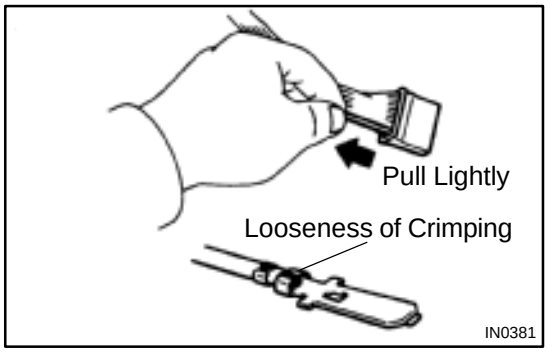

IN0381

5. VISUAL CHECK AND CONTACT PRESSURE CHECK

(a) Disconnect the connectors at both ends.

(b) Check for rust or foreign material, etc. in the terminals of the connectors.

(c) Check crimped portions for looseness or damage and check that the terminals are secured in lock portion.

HINT:

The terminals should not come out when pulled lightly from the back.

(d) Prepare a test male terminal and insert it in the female terminal, then pull it out.

NOTICE:

When testing a gold–plated female terminal, always use a gold–plated male terminal.

HINT:

When the test terminal is pulled out more easily than others, there may be poor contact in that section.

Fig. 1

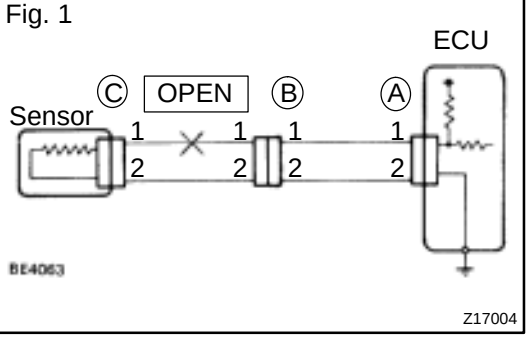

6. CHECK OPEN CIRCUIT

For the open circuit in the wire harness in Fig. 1, perform "(a) Continuity Check" or "(b) Voltage Check" to locate the section.

Fig. 2

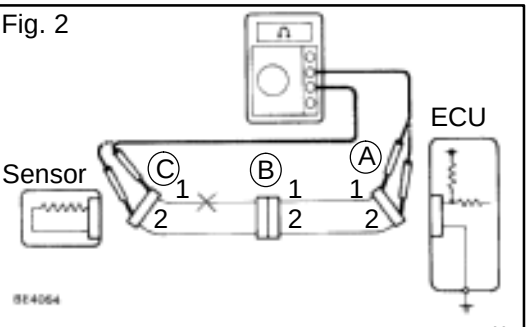

(a) Check the continuity.

(1) Disconnect connectors "A" and "C" and measure the resistance between them.

In the case of Fig. 2,

Between terminal 1 of connector "A" and terminal 1 of connector "C" → No continuity (open)

Between terminal 2 of connector "A" and terminal 2 of connector "C" → Continuity

Therefore, it is found out that there is an open circuit between terminal 1 of connector "A" and terminal 1 of connector "C".

Fig. 3

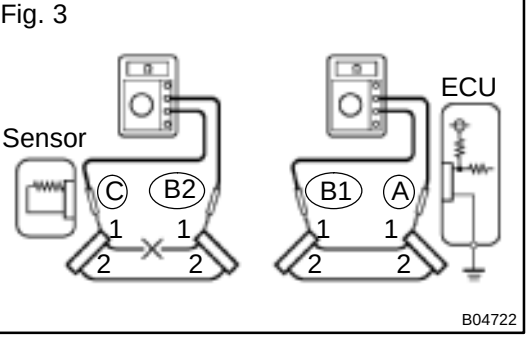

(2) Disconnect connector "B" and measure the resistance between the connectors.

In the case of Fig. 3,

Between terminal 1 of connector "A" and terminal 1 of connector "B1" → Continuity

Between terminal 1 of connector "B2" and terminal 1 of connector "C" → No continuity (open)

Therefore, it is found out that there is an open circuit between terminal 1 of connector "B2" and terminal 1 of connector "C".

Fig. 4

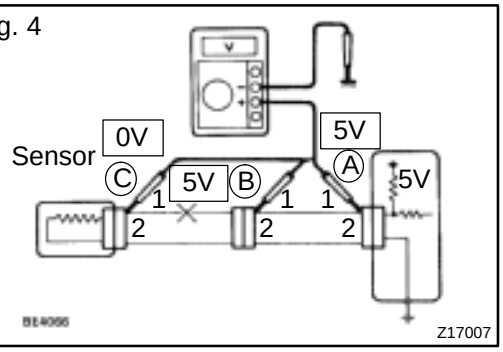

(b) Check the voltage.

In a circuit in which voltage is applied (to the ECU connector terminal), an open circuit can be checked for by conducting a voltage check.

As shown in Fig. 4, with each connector still connected, measure the voltage between body ground and terminal 1 of connector ”A” at the ECU 5V output terminal, terminal 1 of connector ”B”, and terminal 1 of connector ”C”, in that order.

If the results are:

5V: Between Terminal 1 of connector ”A” and Body Ground
5V: Between Terminal 1 of connector ”B” and Body Ground
0V: Between Terminal 1 of connector ”C” and Body Ground

Then it is found out that there is an open circuit in the wire harness between terminal 1 of ”B” and terminal 1 of ”C”.

Fig. 5

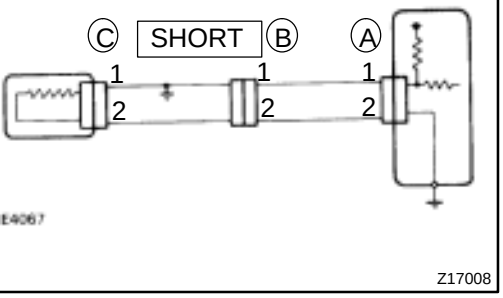

7. CHECK SHORT CIRCUIT

If the wire harness is ground shorted as in Fig. 5, locate the section by conducting a ”continuity check with ground”.

Fig. 6

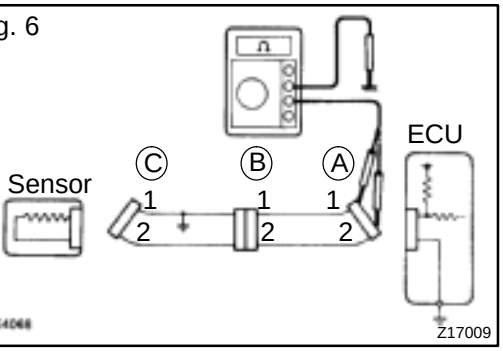

Check the continuity with ground.

(1) Disconnect connectors ”A” and ”C” and measure the resistance between terminal 1 and 2 of connector ”A” and body ground.

In the case of Fig. 6

Between terminal 1 of connector ”A” and body ground → Continuity (short)

Between terminal 2 of connector ”A” and body ground → No continuity

Therefore, it is found out that there is a short circuit between terminal 1 of connector ”A” and terminal 1 of connector ”C”.

Fig. 7

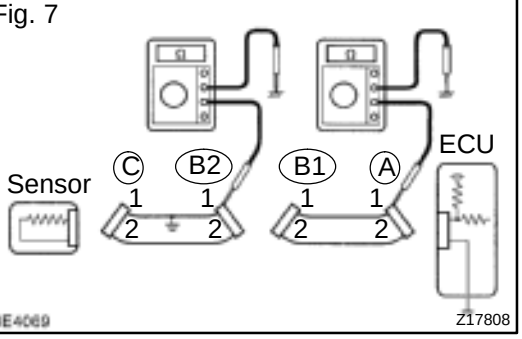

(2) Disconnect connector ”B” and measure the resistance between terminal 1 of connector ”A” and body ground, and terminal 1 of connector ”B2” and body ground.
Between terminal 1 of connector ”A” and body ground → No continuity
Between terminal 1 of connector ”B2” and body ground → Continuity (short)
Therefore, it is found out that there is a short circuit between terminal 1 of connector ”B2” and terminal 1 of connector ”C”.

8. CHECK AND REPLACE ECU

First check the ECU ground circuit. If it is faulty, repair it. If it is normal, the ECU could be faulty, so replace the ECU with a normal functioning one and check that the symptoms appear.

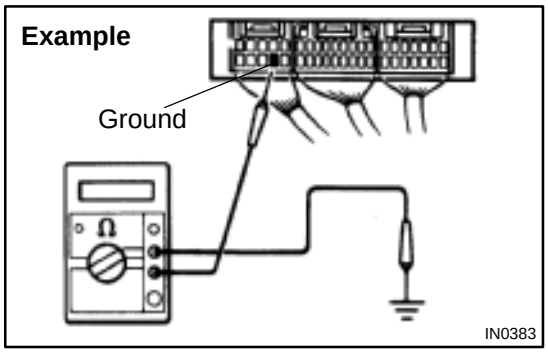

(1) Measure the resistance between the ECU ground terminal and the body ground.

Resistance: 1 Ω or less

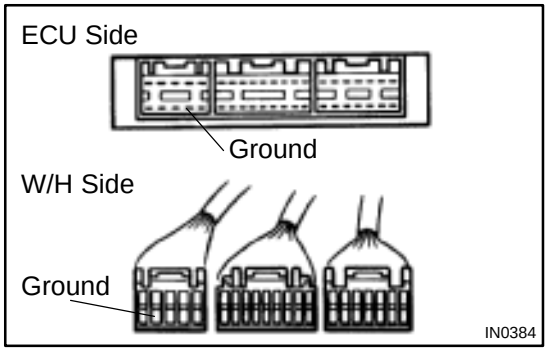

(2) Disconnect the ECU connector, check the ground terminals on the ECU side and the wire harness side for bend and check the contact pressure.

HOW TO USE THIS MANUAL

IN00U–02

GENERAL INFORMATION

1. INDEX

An INDEX is provided on the first page of each section to guide you to the item to be repaired. To assist you in finding your way through the manual, the Section Title and major heading are given at the top of every page.

2. GENERAL DESCRIPTION

At the beginning of each section, a General Description is given that pertains to all repair operations contained in that section.

Read these precautions before starting any repair task.

3. TROUBLESHOOTING

TROUBLESHOOTING tables are included for each system to help you diagnose the problem and find the cause. The fundamentals of how to proceed with troubleshooting are described on page IN–17.

Be sure to read this before performing troubleshooting.

4. PREPARATION

Preparation lists the SST (Special Service Tools), recommended tools, equipment, lubricant and SSM (Special Service Materials) which should be prepared before beginning the operation and explains the purpose of each one.

5. REPAIR PROCEDURES

Most repair operations begin with an overview illustration. It identifies the components and shows how the parts fit together.

Example:

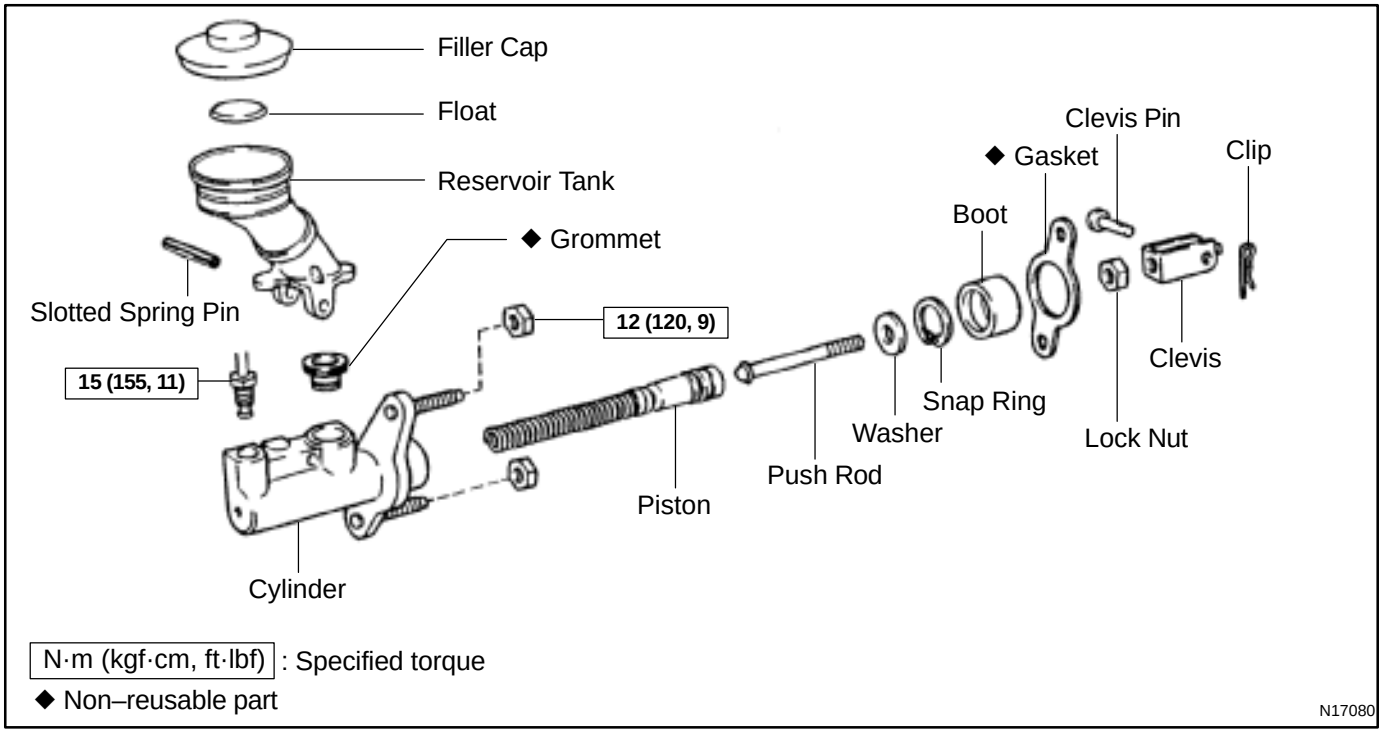

The procedures are presented in a step–by–step format:

- The illustration shows what to do and where to do it.
- The task heading tells what to do.
- The detailed text tells how to perform the task and gives other information such as specifications and warnings.

Example¿

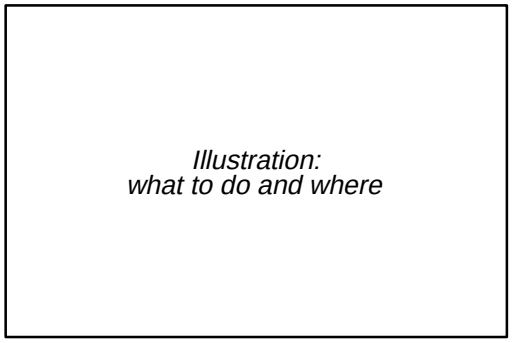

Task heading : what to do

21. CHECK PISTON STROKE OF OVERDRIVE BRAKE

(a) Place SST and a dial indicator onto the overdrive brake piston as shown in the illustration.

SST 09350–30020 (09350–06120)

Set part No. *Component part No.*

Detailed text : how to do task

(b) Measure the stroke applying and releasing the compressed air (392 — 785 kPa, 4 — 8 kgf/cm^2 or 57 — 114 psi) as shown in the illustration.

Piston stroke: 1.40 — 1.70 mm (0.0551 — 0.0669 in.)

Specification

This format provides the experienced technician with a FAST TRACK to the information needed. The upper case task heading can be read at a glance when necessary, and the text below it provides detailed information. Important specifications and warnings always stand out in bold type.

6. REFERENCES

References have been kept to a minimum. However, when they are required you are given the page to refer to.

7. SPECIFICATIONS

Specifications are presented in bold type throughout the text where needed. You never have to leave the procedure to look up your specifications. They are also found in Service Specifications section, for quick reference.

8. CAUTIONS, NOTICES, HINTS:

- CAUTIONS are presented in bold type, and indicate there is a possibility of injury to you or other people.
- NOTICES are also presented in bold type, and indicate the possibility of damage to the components being repaired.
- HINTS are separated from the text but do not appear in bold. They provide additional information to help you perform the repair efficiently.

9. SI UNIT

The UNITS given in this manual are primarily expressed according to the SI UNIT (International System of Unit), and alternately expressed in the metric system and in the English System.

Example:

Torque: 30 N·m (310 kgf·cm, 22 ft·lbf)

IDENTIFICATION INFORMATION

IN03Y–02

VEHICLE IDENTIFICATION AND ENGINE SERIAL NUMBER

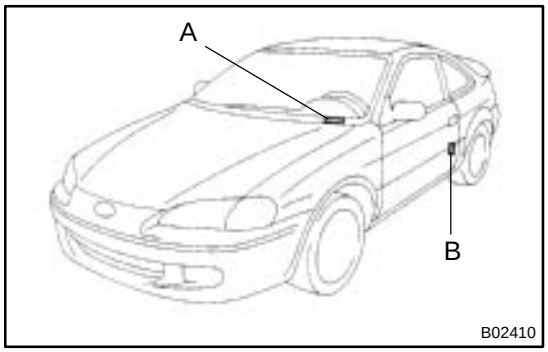

1. VEHICLE IDENTIFICATION NUMBER

The vehicle identification number is stamped on the vehicle identification number plate and the certification label, as shown in the illustration.

A: Vehicle Identification Number Plate
B: Certification Label

5E – FE Engine :

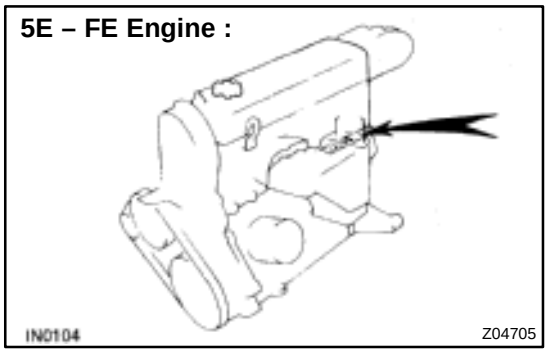

2. ENGINE SERIAL NUMBER

The engine serial number is stamped on the engine block, as shown in the illustration.

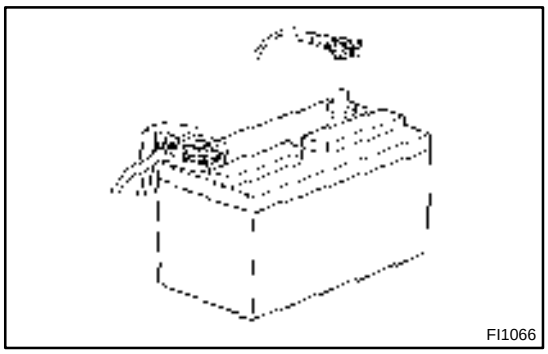
FI1066

REPAIR INSTRUCTIONS

GENERAL INFORMATION

IN06S–01

BASIC REPAIR HINT

(a) Use fender, seat and floor covers to keep the vehicle clean and prevent damage.

(b) During disassembly, keep parts in the appropriate order to facilitate reassembly.

(c) Installation and removal of battery terminal:
  (1) Before performing electrical work, disconnect the negative (–) terminal cable from the battery.
  (2) If it is necessary to disconnect the battery for inspection or repair, first disconnect the negative (–) terminal cable.
  (3) When disconnecting the terminal cable, to prevent damage to battery terminal, loosen the cable nut and raise the cable straight up without twisting or prying it.
  (4) Clean the battery terminals and cable ends with a clean shop rag. Do not scrape them with a file or other abrasive objects.
  (5) Install the cable ends to the battery terminals after loosening the nut and tighten the nut after installation. Do not use a hammer to tap the cable ends onto the terminals.
  (6) Be sure the cover for the positive (+) terminal is properly in place.

(d) Check hose and wiring connectors to make sure that they are connected securely and correctly.

(e) Non–reusable parts
  (1) Always replace cotter pins, gaskets, O–rings, oil seals, etc. with new ones.
  (2) Non–reusable parts are indicated in the component illustrations by the "◆" symbol.

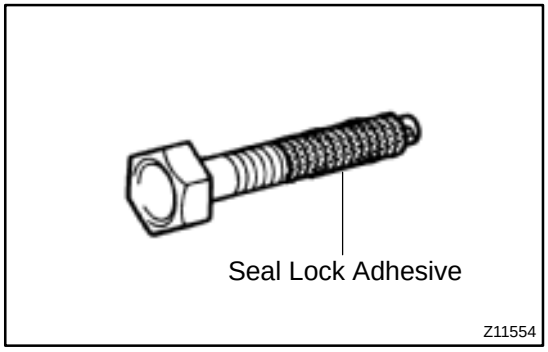

Z11554

(f) Precoated parts
Precoated parts are bolts, nuts, etc. that are coated with a seal lock adhesive at the factory.
  (1) If a precoated part is retightened, loosened or caused to move in any way, it must be recoated with the specified adhesive.
  (2) When reusing precoated parts, clean off the old adhesive and dry with compressed air. Then apply the specified seal lock adhesive to the bolt, nut or threads.

(3) Precoated parts are indicated in the component illustrations by the "★" symbol.

(g) When necessary, use a sealer on gaskets to prevent leaks.

(h) Carefully observe all specifications for bolt tightening torques. Always use a torque wrench.

(i) Use of special service tools (SST) and special service materials (SSM) may be required, depending on the nature of the repair. Be sure to use SST and SSM where specified and follow the proper work procedure. A list of SST and SSM can be found in Preparation section in this manual.

Medium Current Fuse and High Current Fuse Equal Amperage Rating

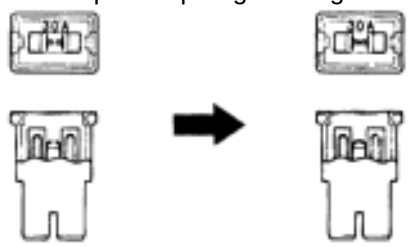

(j) When replacing fuses, be sure the new fuse has the correct amperage rating. DO NOT exceed the rating or use one with a lower rating.

Illustration	Symbol	Part Name	Abbreviation
 BE5594	 IN0365	FUSE	FUSE
 BE5595	 IN0366	MEDIUM CURRENT FUSE	M–FUSE
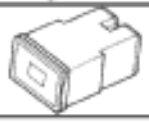 BE5596	 IN0367	HIGH CURRENT FUSE	H–FUSE
 BE5597	 IN0367	FUSIBLE LINK	FL
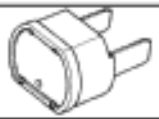 BE5598	 IN0368	CIRCUIT BREAKER	CB

V00076

(k) Care must be taken when jacking up and supporting the vehicle. Be sure to lift and support the vehicle at the proper locations (See page IN–8).
  (1) If the vehicle is to be jacked up only at the front or rear end, make sure to place the stopper under the wheels at the opposite end to block them in order to ensure safety.
  (2) After the vehicle is jacked up, be sure to support it on stands. It is extremely dangerous to do any work on a vehicle raised on a jack alone, even for a small job that can be finished quickly.

(l) Observe the following precautions to avoid damage to the following parts:
  (1) Do not open the cover or case of the ECU unless absolutely necessary. (If the IC terminals are touched, the IC may be destroyed by static electricity.)

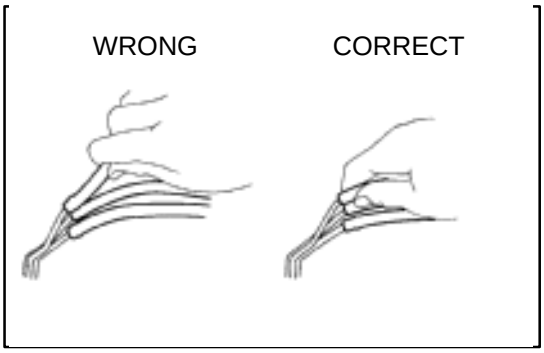

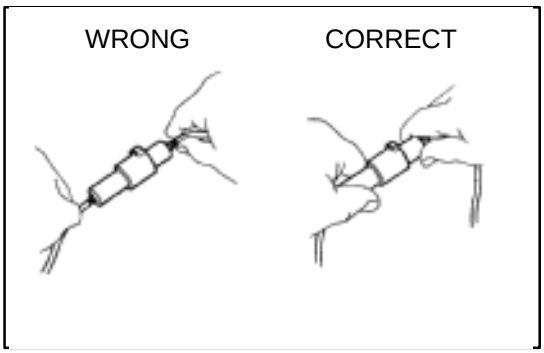

  (2) To disconnect vacuum hoses, pull off the end, not the middle of the hose.
  (3) To pull apart electrical connectors, pull on the connector itself, not the wires.
  (4) Be careful not to drop electrical components, such as sensors or relays. If they are dropped on a hard floor, they should be replaced and not reused.
  (5) When steam cleaning an engine, protect the electronic components, air filter and emission–related components from water.
  (6) Never use an impact wrench to remove or install temperature switches or temperature sensors.
  (7) When checking continuity at the wire connector, insert the tester probe carefully to prevent terminals from bending.
  (8) When using a vacuum gauge, never force the hose onto a connector that is too large. Use a step–down adapter for adjustment. Once the hose has been stretched, it may leak air.

Example

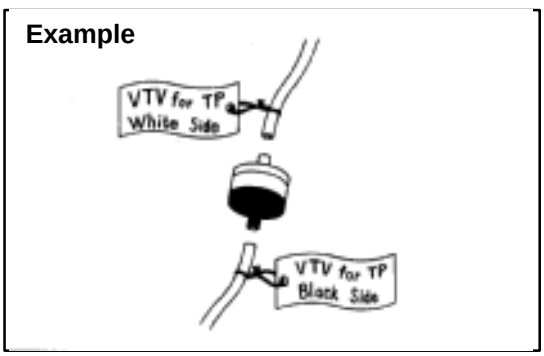

(m) Installation and removal of vacuum hose:
  (1) When disconnecting vacuum hoses, use tags to identify where they should be reconnected to.
  (2) After completing a job, double check that the vacuum hoses are properly connected. A label under the hood shows the proper layout.

(n) Unless otherwise stated, all resistance is measured at an ambient temperature of 20˚C (68˚F). Because the resistance may be outside specifications if measured at high temperatures immediately after the vehicle has been running, measurement should be made when the engine has cooled down.

IN040–03

VEHICLE LIFT AND SUPPORT LOCATIONS

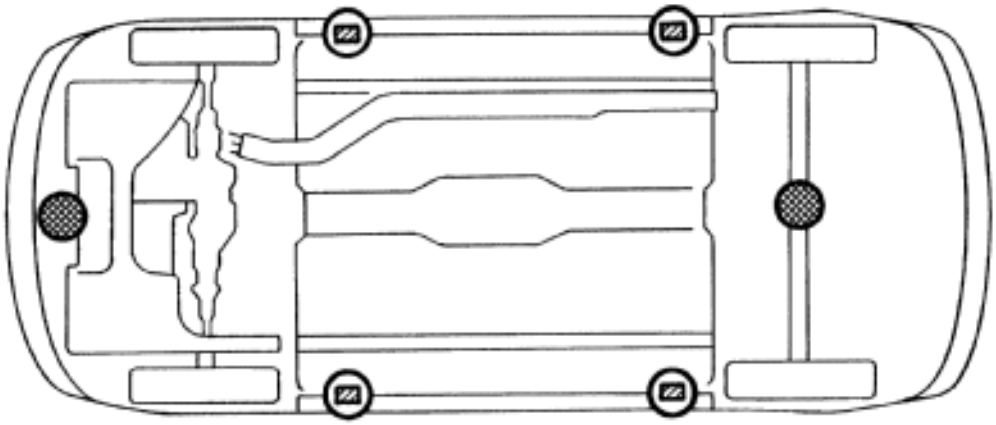

Front

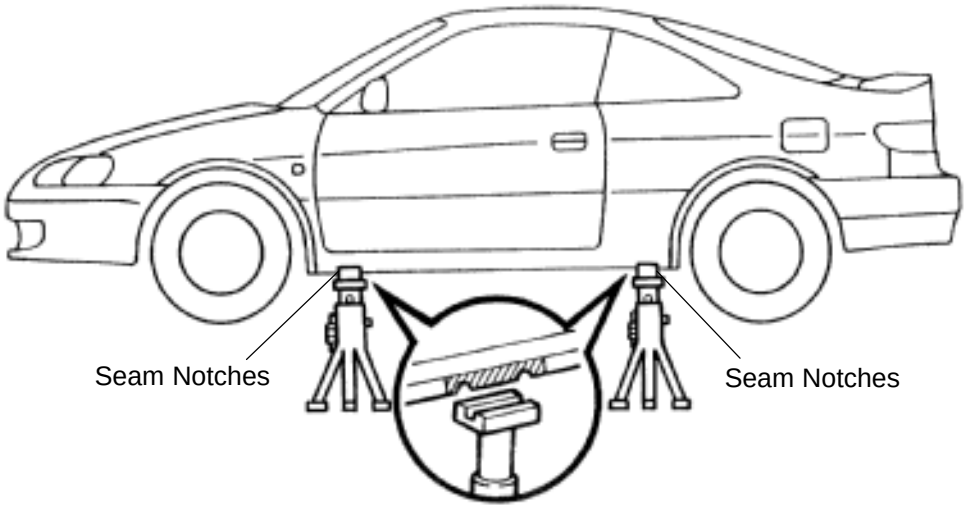

JACK POSITION

Front - - - - - - - - - - Front crossmember
Rear - - - - - - - - - - Rear axle beam

CAUTION : When jacking–up the front and rear, make sure the car is not carrying any extra weight.

PANTOGRAPH JACK POSITION

SUPPORT POSITION

Safety stand and swing arm type lift -

N17187

PLATE TYPE LIFT

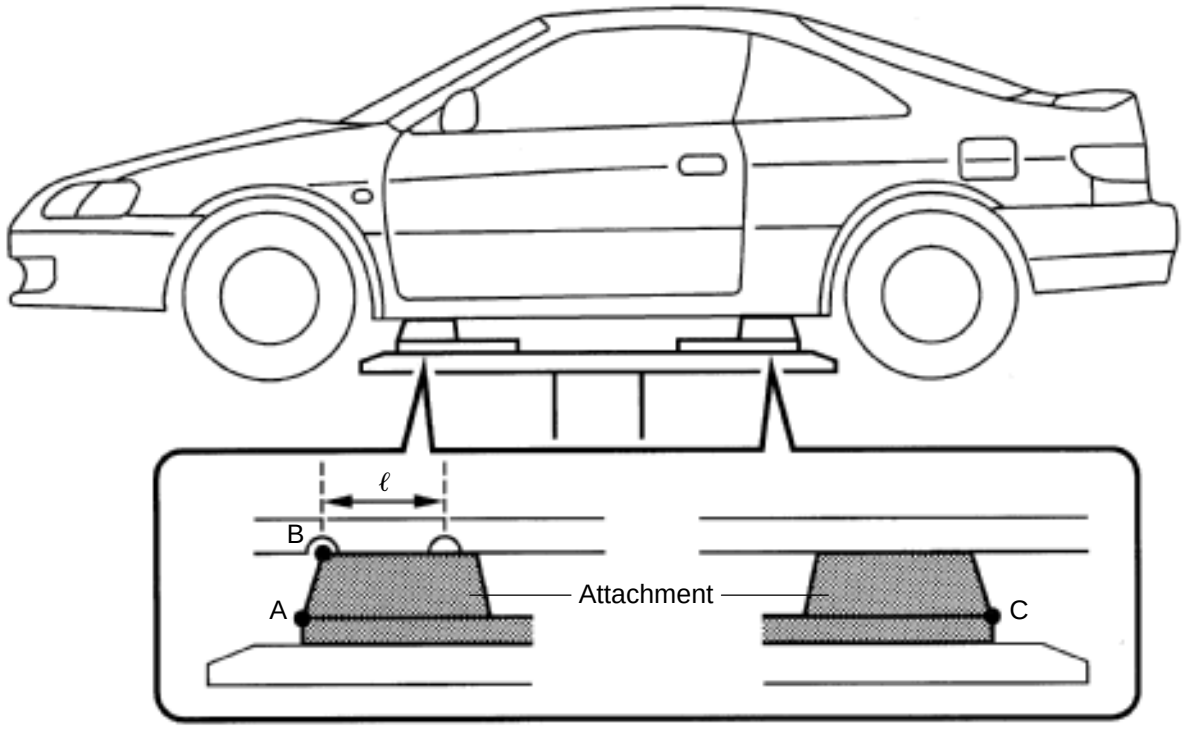

HINT :

Left and right set position	Place the vehicle over the center of the lift.
Front and rear set position	● Align the cushion gum ends of the plate with the attachment lower ends (A, C). ● Align the attachment upper end (B) with the front jack supporting point (ℓ).

Attachment dimensions

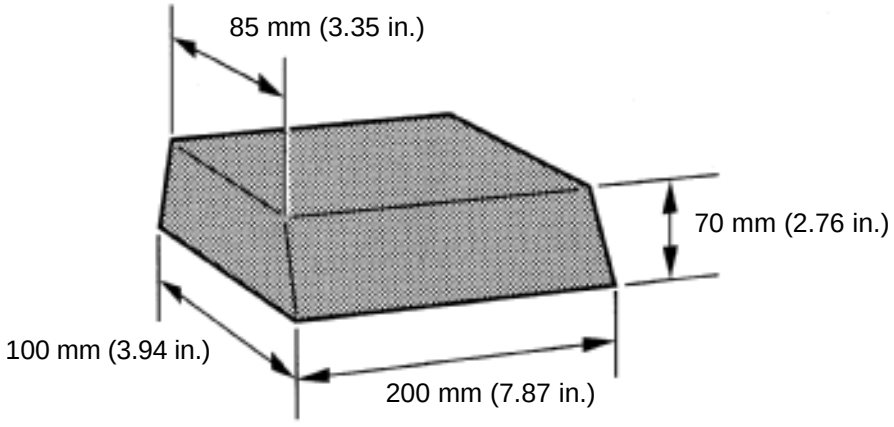

N21683

TERMS

ABBREVIATIONS USED IN THIS MANUAL

IN07H–01

Abbreviations	Meaning
ABS	Anti–Lock Brake System
ALR	Automatic Locking Retractor
A/T	Automatic Transmission (Transaxle)
ATF	Automatic Transmission Fluid
BDC	Bottom Dead Center
BTDC	Before Top Dead Center
Calif.	California
CB	Circuit Breaker
CRS	Child Restraint System
CVJ	Constant Velocity Joint
DP	Dash Pot
ECU	Electronic Control Unit
ELR	Emergency Locking Retractor
ESA	Electronic Spark Advance
EX	Exhaust (Manifold, Valve)
FIPG	Formed in Place Gasket
FL	Fusible Link
FR, Fr	Front
IG	Ignition
IIA	Integrated Ignition Assembly
IN	Intake (Manifold, Valve)
INT	Intermittent
J/B	Junction Block
LED	Light Emitting Diode
LH	Left–Hand
LSPV	Load Sensing Proportioning Valve
LHD	Left–Hand Drive
LLC	Long Life Coolant (Year Around Coolant)
Max.	Maximum
Min.	Minimum
MP	Multipurpose
M/T	Manual Transmission (Transaxle)
O/D, OD	Overdrive
O/S	Oversize
PCV	Positive Crankcase Ventilation
PKB	Parking Brake
PS	Power Steering
RH	Right–Hand
RR, Rr	Rear
SC	Spark Control
SRS	Supplemental Restraint System
SSM	Special Service Materials

SST	Special Service Tools
STD	Standard
SW	Switch
TDC	Top Dead Center
TEMP.	Temperature
T/M	Transmission
U/S	Undersize
VCV	Vacuum Control Valve
VSV	Vacuum Switching Valve
VTV	Vacuum Transmitting Valve
w/	With
w/o	Without

IN07I–01

GLOSSARY OF SAE AND TOYOTA TERMS

This glossary lists all SAE–J1930 terms and abbreviations used in this manual in compliance with SAE recommendations, as well as their Toyota equivalents.

SAE ABBREVIATIONS	SAE TERMS	TOYOTA TERMS ( )—ABBREVIATIONS
A/C	Air Conditioning	Air Conditioner
ACL	Air Cleaner	Air Cleaner
AIR	Secondary Air Injection	Air Injection (AI)
AP	Accelerator Pedal	–
B+	Battery Positive Voltage	+B, Battery Voltage
BARO	Barometric Pressure	–
CAC	Charge Air Cooler	Intercooler
CARB	Carburetor	Carburetor
CFI	Continuous Fuel Injection	–
CKP	Crankshaft Position	Crank Angle
CL	Closed Loop	Closed Loop
CMP	Camshaft Position	Cam Angle
CPP	Clutch Pedal Position	–
CTOX	Continuous Trap Oxidizer	–
CTP	Closed Throttle Position	–
DFI	Direct Fuel Injection (Diesel)	Direct Injection (DI)
DI	Distributor Ignition	–
DLC1 DLC2 DLC3	Data Link Connector 1 Data Link Connector 2 Data Link Connector 3	1: Check Connector 2: Total Diagnosis Comunication Link (TDCL) 3: OBD II Diagnostic Connector
DTC	Diagnostic Trouble Code	Diagnostic Code
DTM	Diagnostic Test Mode	–
ECL	Engine Control Level	–
ECM	Engine Control Module	Engine ECU (Electronic Control Unit)
ECT	Engine Coolant Temperature	Coolant Temperature, Water Temperature (THW)
EEPROM	Electrically Erasable Programmable Read Only Memory	Electrically Erasable Programmable Read Only Memory (EEPROM), Erasable Programmable Read Only Memory (EPROM)
EFE	Early Fuel Evaporation	Cold Mixture Heater (CMH), Heat Control Valve (HCV)
EGR	Exhaust Gas Recirculation	Exhaust Gas Recirculation (EGR)
EI	Electronic Ignition	Distributorless Ignition (DI)
EM	Engine Modification	Engine Modification (EM)
EPROM	Erasable Programmable Read Only Memory	Programmable Read Only Memory (PROM)
EVAP	Evaporative Emission	Evaporative Emission Control (EVAP)
FC	Fan Control	–
FEEPROM	Flash Electrically Erasable Programmable Read Only Memory	–
FEPROM	Flash Erasable Programmable Read Only Memory	–
FF	Flexible Fuel	–
FP	Fuel Pump	Fuel Pump
GEN	Generator	Alternator
GND	Ground	Ground (GND)

HO2S	Heated Oxygen Sensor	Heated Oxygen Sensor (HO2S)
IAC	Idle Air Control	Idle Speed Control (ISC)
IAT	Intake Air Temperature	Intake or Inlet Air Temperature
ICM	Ignition Control Module	–
IFI	Indirect Fuel Injection	Indirect Injection
IFS	Inertia Fuel–Shutoff	–
ISC	Idle Speed Control	–
KS	Knock Sensor	Knock Sensor
MAF	Mass Air Flow	Air Flow Meter
MAP	Manifold Absolute Pressure	Manifold Pressure Intake Vacuum
MC	Mixture Control	Electric Bleed Air Control Valve (EBCV) Mixture Control Valve (MCV) Electric Air Control Valve (EACV)
MDP	Manifold Differential Pressure	–
MFI	Multiport Fuel Injection	Electronic Fuel Injection (EFI)
MIL	Malfunction Indicator Lamp	Check Engine Light
MST	Manifold Surface Temperature	–
MVZ	Manifold Vacuum Zone	–
NVRAM	Non–Volatile Random Access Memory	–
O2S	Oxygen Sensor	Oxygen Sensor, O_2 Sensor (O_2S)
OBD	On–Board Diagnostic	On–Board Diagnostic (OBD)
OC	Oxidation Catalytic Converter	Oxidation Catalyst Converter (OC), CCo
OP	Open Loop	Open Loop
PAIR	Pulsed Secondary Air Injection	Air Suction (AS)
PCM	Powertrain Control Module	–
PNP	Park/Neutral Position	–
PROM	Programmable Read Only Memory	–
PSP	Power Steering Pressure	–
PTOX	Periodic Trap Oxidizer	Diesel Particulate Filter (DPF) Diesel Particulate Trap (DPT)
RAM	Random Access Memory	Random Access Memory (RAM)
RM	Relay Module	–
ROM	Read Only Memory	Read Only Memory (ROM)
RPM	Engine Speed	Engine Speed
SC	Supercharger	Supercharger
SCB	Supercharger Bypass	–
SFI	Sequential Multiport Fuel Injection	Electronic Fuel Injection (EFI), Sequential Injection
SPL	Smoke Puff Limiter	–
SRI	Service Reminder Indicator	–
SRT	System Readiness Test	–
ST	Scan Tool	–
TB	Throttle Body	Throttle Body
TBI	Throttle Body Fuel Injection	Single Point Injection Central Fuel Injection (Ci)
TC	Turbocharger	Turbocharger
TCC	Torque Converter Clutch	Torque Converter

TCM	Transmission Control Module	Transmission ECU (Electronic Control Unit)
TP	Throttle Position	Throttle Position
TR	Transmission Range	–
TVV	Thermal Vacuum Valve	Bimetallic Vacuum Switching Valve (BVSV) Thermostatic Vacuum Switching Valve (TVSV)
TWC	Three–Way Catalytic Converter	Three–Way Catalytic (TWC) CC_{RO}
TWC+OC	Three–Way + Oxidation Catalytic Converter	CC_R + CCo
VAF	Volume Air Flow	Air Flow Meter
VR	Voltage Regulator	Voltage Regulator
VSS	Vehicle Speed Sensor	Vehicle Speed Sensor (Read Switch Type)
WOT	Wide Open Throttle	Full Throttle
WU–OC	Warm Up Oxidation Catalytic Converter	–
WU–TWC	Warm Up Three–Way Catalytic Converter	Manifold Converter
3GR	Third Gear	–
4GR	Fourth Gear	–

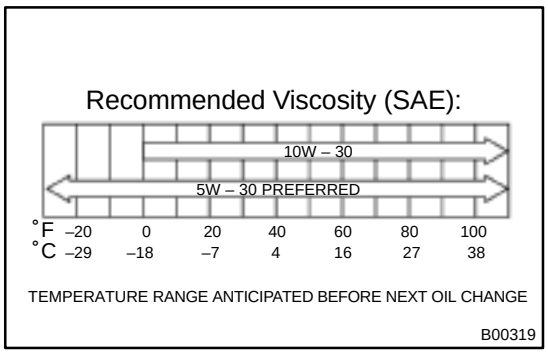

OIL AND FILTER

LU08A–05

INSPECTION

1. CHECK ENGINE OIL QUALITY

Check the oil for deterioration, entry of water, discoloring or thinning.

If the oil quality is visibly poor, replace it.

Oil grade:

API grade or SH Energy–Conserving II or ILSAC multigrade engine oil. SAE 5W–30 is the best choice for your vehicle, for good fuel economy, and good starting in cold weather.

2. CHECK ENGINE OIL LEVEL

The oil level should be between the "L" and "F" marks on the dipstick.

If low, check for leakage and add oil up to the "F" mark.

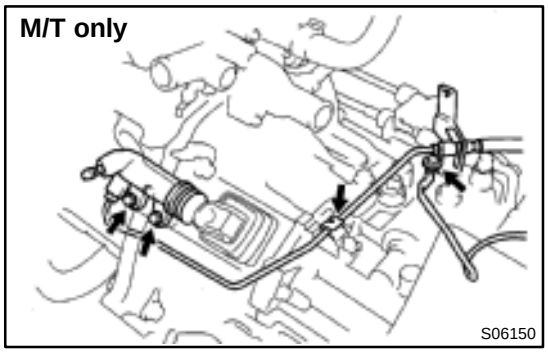

3. REMOVE OIL PRESSURE SWITCH AND INSTALL OIL PRESSURE GAUGE

(a) Remove the bolt and air intake connector.

(b) M/T only

Remove the 3 bolts, release cylinder and tube from the transaxle.

(c) Remove the oil pressure switch.

(d) Install the oil pressure gauge.

4. WARM UP ENGINE

Allow the engine to warm up to normal operating temperature.

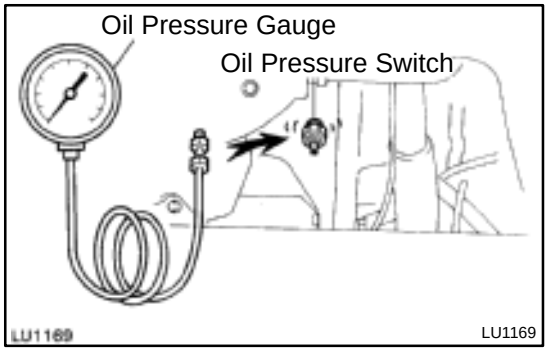

5. CHECK OIL PRESSURE

Oil pressure:

At idle speed

29 kPa (0.3 kgf/cm^2, 4.3 psi) or more

At 3,000 rpm

245 – 490 kPa (2.5 – 5.0 kgf/cm^2, 36 – 71 psi)

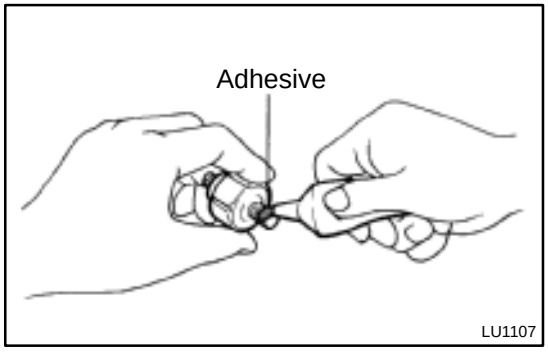

6. REMOVE OIL PRESSURE GAUGE AND REINSTALL OIL PRESSURE SWITCH

(a) Remove the oil pressure gauge.

(b) Apply adhesive to 2 or 3 threads of the oil pressure switch.

Adhesive:

Part No. 08833–00080, THREE BOND 1344, LOCTITE 242 or eqivalent

(c) Reinstall the oil pressure switch.

(d) M/T only
Install the release cylinder and tube with the 3 bolts.
Torque: 12 N·m (120 kgf·cm, 9 ft·lbf)

(e) Install the air intake connector with the bolt.

7. START ENGINE AND CHECK FOR LEAKS

LU08B–02

REPLACEMENT

CAUTION:

- **Prolonged and repeated contact with mineral oil will result in the removal of natural fats from the skin, leading to dryness, irritation and dermatitis. In addition, used engine oil contains potentially harmful contaminants which may cause skin cancer. Adequate means of skin protection and washing facilities should be provided.**
- **Care should be taken, therefore, when changing engine oil, to minimize the frequency and length of time your skin is exposed to used engine oil. Protective clothing and gloves, that cannot be penetrated by oil, should be worn. Wash your skin throughly with soap and water, or use waterless hand cleaner, to remove any used engine oil. Do not use gasoline, thinners, or solvents.**
- **In order to preserve the environment, used oil must be disposed of only at designated disposal sites.**

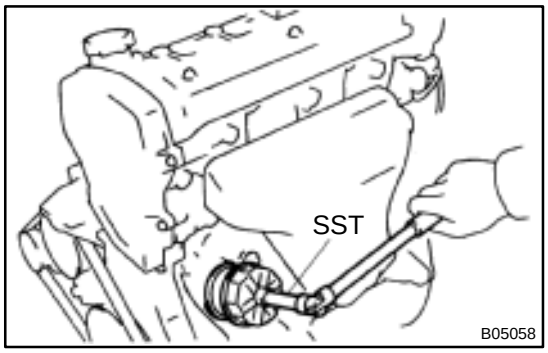

1. DRAIN ENGINE OIL

(a) Remove the oil filler cap.

(b) Remove the oil drain plug and drain the oil into a container.

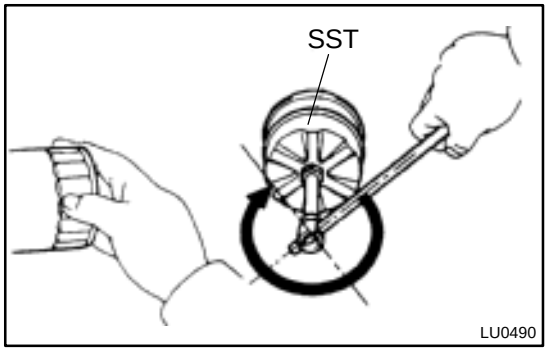

2. REPLACE OIL FILTER

(a) Using SST, remove the oil filter.
SST 09228–06501

(b) Clean the filter contact surface on the filter mounting.

(c) Lubricate the filter rubber gasket with engine oil.

(d) Tighten filter until the gasket contacts seat of the filter mounting. Then using SST, give it an additional 3/4 turn to seat the filter.
SST 09228–06501

3. FILL WITH ENGINE OIL

(a) Clean and install the oil drain plug with a new gasket.
Torque: 25 N·m (250 kgf·cm, 18 ft·lbf)

(b) Fill the engine with new oil.
Oil capacity:

Drain and refill	w/ Oil filter change	2.8 liters (3.0 US qts, 2.5 lmp. qts)
	w/o Oil filter change	2.6 liters (2.7 US qts, 2.3 lmp. qts)
Dry fill		3.7 liters (3.9 US qts, 3.3 lmp. qts)

4. START ENGINE AND CHECK FOR LEAKS

5. CHECK ENGINE OIL LEVEL

OIL PUMP

COMPONENTS

LU08C–05

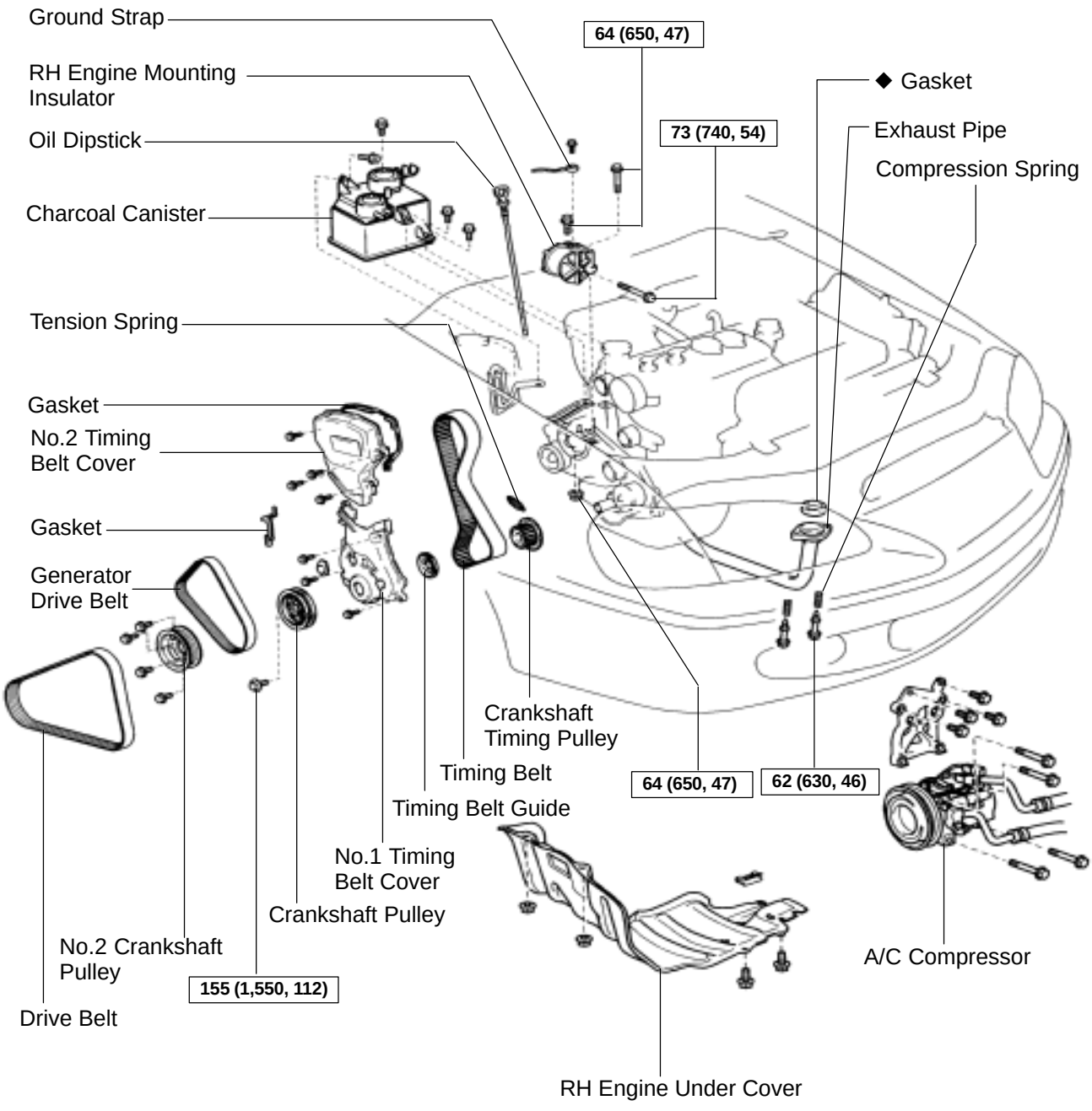

N·m (kgf·cm, ft·lbf) : Specified torque

◆ Non–reusable part

B05061

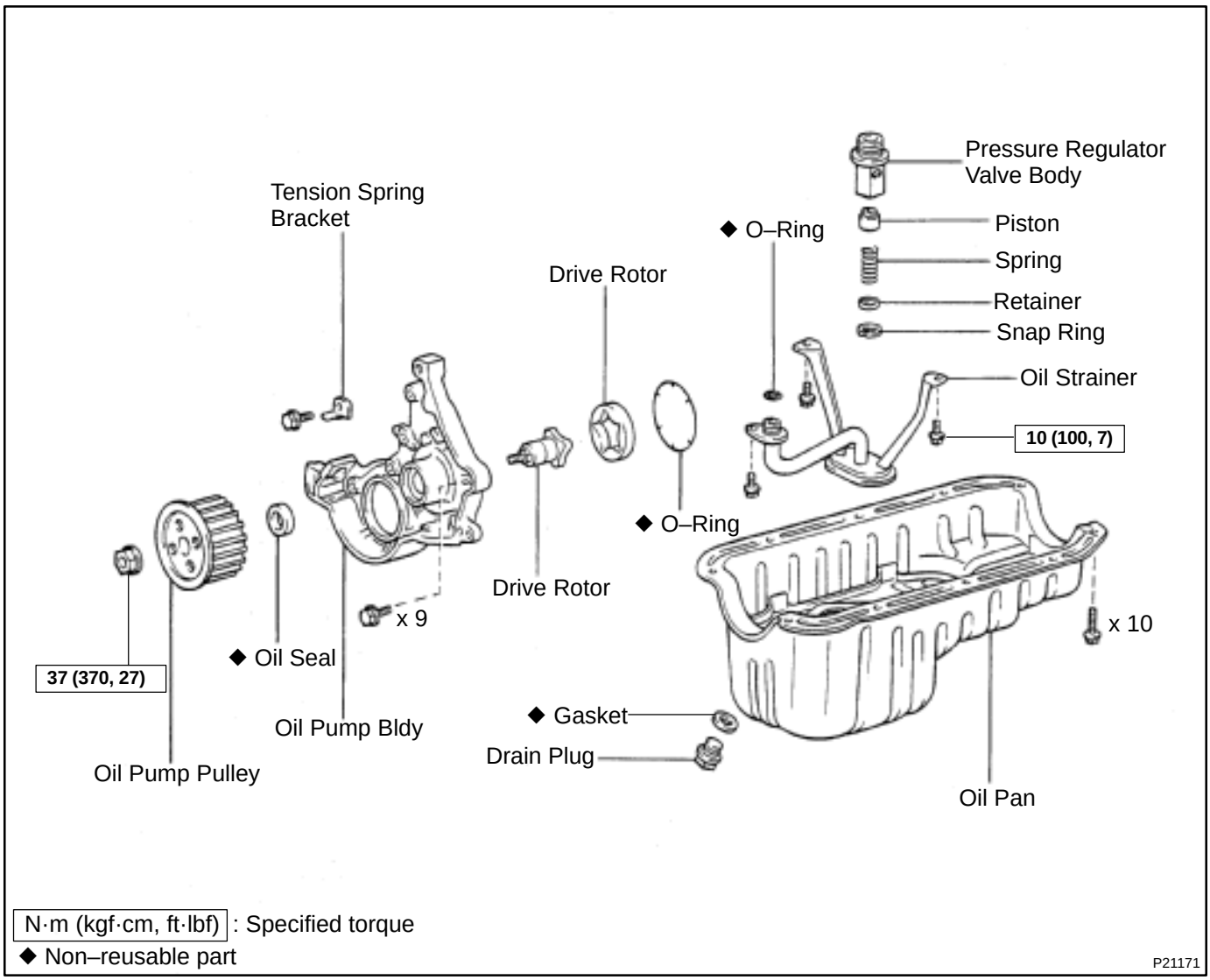

N·m (kgf·cm, ft·lbf) : Specified torque

◆ Non–reusable part

P21171

LU08E–01

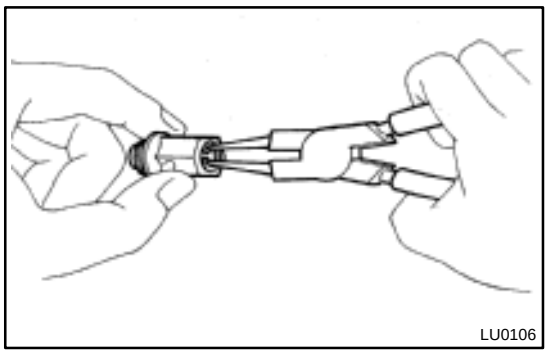

DISASSEMBLY

REMOVE PRESSURE REGULATOR VALVE

(a) Using snap ring pliers, remove the snap ring.

(b) Remove the retainer, spring and pressure regulator valve piston.

LU08F–01

INSPECTION

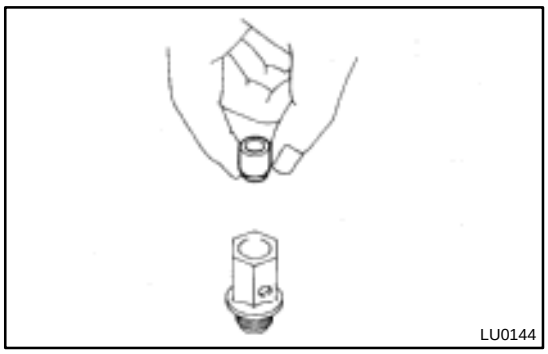

1. INSPECT PRESSURE REGULATOR VALVE

Coat the valve piston with engine oil and check that it falls smoothly into the valve hole by its own weight.

If necessary, replace the valve.

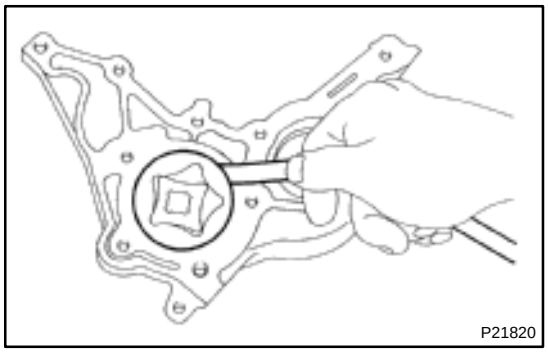

2. INSPECT ROTOR BODY CLEARANCE

Using a feeler gauge, measure the clearance between the driven rotor and pump body.

Standard clearance:
0.10 – 0.16 mm (0.0039 – 0.0063 in.)
Maximum clearance:
0.20 mm (0.0079 in.)

If the clearance is greater than maximum, replace the oil pump rotor set and/or pump body.

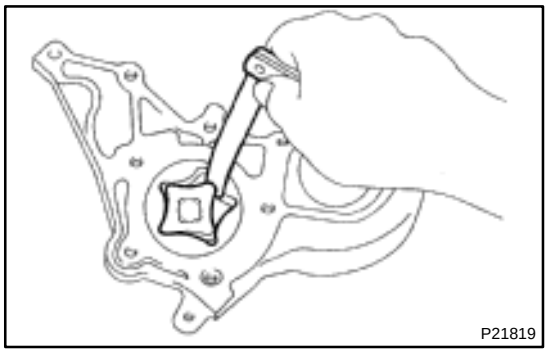

3. INSPECT ROTOR TIP CLEARANCE

Using a feeler gauge, measure the clearance between both rotor tips.

Standard clearance:
0.03 – 0.14 mm (0.0012 – 0.0055 in.)
Maximum clearance:
0.20 mm (0.0079 in.)

If the clearance is greater than maximum, replace the oil pump rotor set.

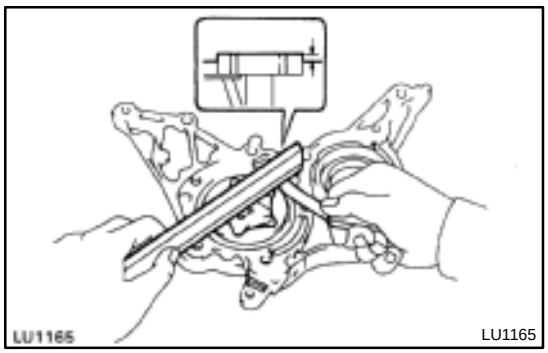

4. INSPECT ROTOR SIDE CLEARANCE

Using a feeler gauge and flat block, measure the side clearance as shown.

Standard clearance:
2.91 – 2.97 mm (0.1145 – 0.1169 in.)
Minimum clearance:
2.90 mm (0.1142 in.)

If the clearance is greater than maximum, replace the oil pump rotor set and/or pump body.

LU08I–02

INSTALLATION

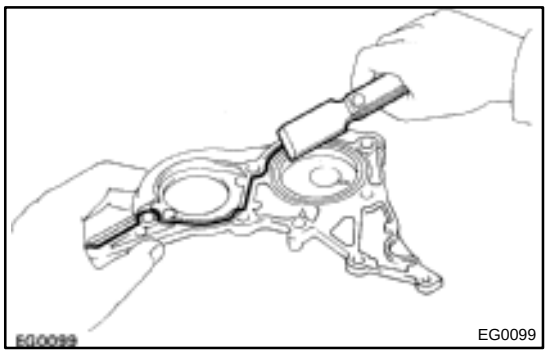

1. INSTALL OIL PUMP

(a) Remove any old packing (FIPG) material and be careful not to drop any oil on the contact surfaces of the oil pump and cylinder block.
- Using a razor blade and gasket scraper, remove all the old packing (FIPG) material from the contact surfaces and sealing grooves.
- Thoroughly clean all components to remove all the loose material.
- Using a non–residue solvent, clean both sealing surfaces.

(b) Place the driven rotors into the pump body with the marks facing the front.

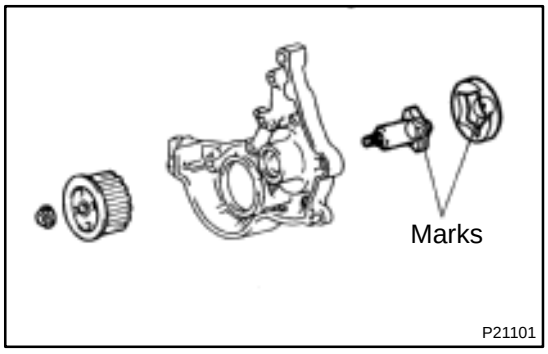

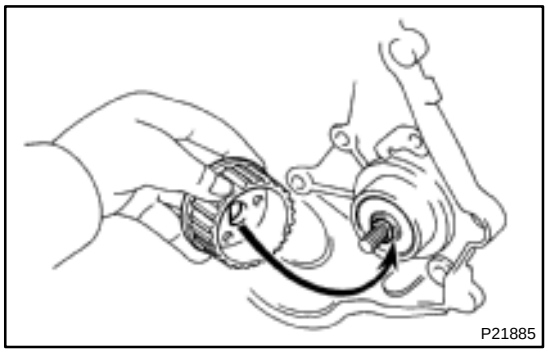

(c) Align the pully and oil pump drive shaft.

(d) Using a vise, install the oil pump pully and nut.

Torque: 37 N·m (370 kgf·cm, 27 ft·lbf)

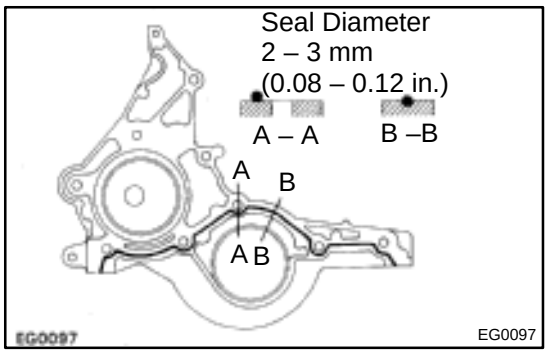

(e) Apply seal packing to the oil pump as shown in the illustration.

Seal packing:

Part No. 08826–00080 or equivalent
- Install a nozzle that has been cut to a 2 – 3 mm(0.08 – 0.12 in.) opening.

HINT:

Avoid applying an excessive amount to the surface.
- Parts must be assembled within 5 minutes of application. Otherwise the material must be removed and reapplied.
- Immediately remove nozzle from the tube and reinstall cap.

(f) Place a new O–ring into the cylinder block side groove.

(g) Install the oil pump and tension spring bracket with the 9 bolts.

Torque: 7.5 N·m (75 kgf·cm, 65 in.·lbf)

2. INSTALL PRESSURE REGULATOR VALVE

Torque: 30 N·m (300 kgf·cm, 22 ft·lbf)

3. INSTALL OIL STRAINER

(a) Apply a little engine oil to a new O–ring.

(b) Install the O–ring to the oil strainer.

(c) Install the oil strainer with the 3 bolts.

Torque: 10 N·m (100 kgf·cm, 7 ft·lbf)

4. INSTALL OIL PAN

(a) Remove any old packing (FIPG) material and be careful not to drop any oil on the contact surfaces of the oil pan, oil pump, rear oil seal retainer and cylinder block.

- Using a razor blade and gasket scraper, remove all the packing (FIPG) material from the contact surfaces.
- Thoroughly clean all components to remove all the loose material.
- Using a non–residue solvent, clean both sealing surfaces.

NOTICE:

Do not use a solvent which will affect the painted surfaces.

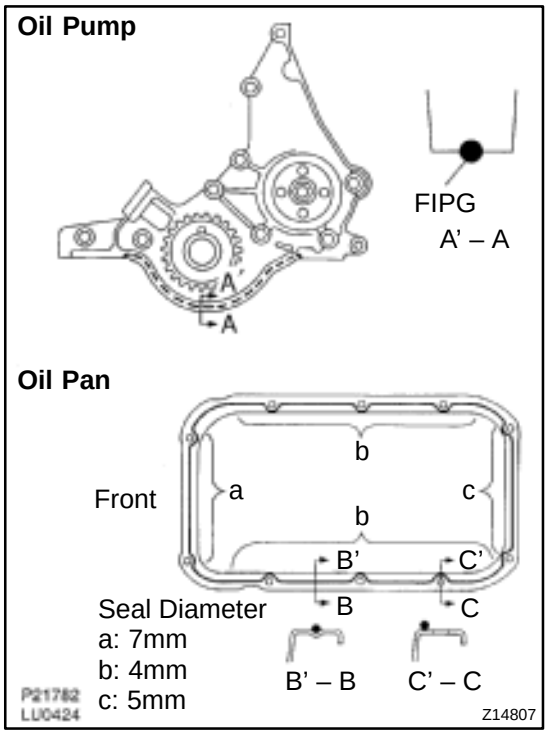

(b) Apply seal packing to the oil pump, rear oil seal retainer and oil pan as shown in the illustration.

Seal packing:

Part No. 08826–00080 or equivalent

Seal diameter:

7 mm (0.28 in.) for a

4 mm (0.16 in.) for b

5 mm (0.17 in.) for c

- Install a nozzle that has been cut to a 4 mm (0.16 in.) or 7 mm (0.28 in.) or 5 mm (0.17 in.) opening.

HINT:

Avoid applying an excess amount to the surface.

- Parts must be assembled within 15 minutes of application. Otherwise, the material must be removed and reapplied.
- Immediately remove nozzle from tube and reinstall cap after use.

(c) Install the oil pan with the 10 bolts.

Torque: 13 N·m (130 kgf·cm, 10 ft·lbf)

5. CONNECT FRONT EXHAUST PIPE

(a) Place a new gasket on the exhaust pipe.

(b) Connect the exhaust pipe to the exhaust manifold with 2 compresson springs and 2 bolts.

Torque: 62 N·m (630 kgf·cm, 46 ft·lbf)

6. w/ A/C:

INSTALL A/C COMPRESSOR AND MOUNTING BRACKET

(a) Install the compressor mounting bracket with the 4 bolts.

Torque: 27 N·m (270 kgf·cm, 20 ft·lbf)

(b) Install the A/C compressor to the bracket with the 4 bolts.
Torque: 25 N·m (250 kgf·cm, 18 ft·lbf)

(c) Connect the A/C compressor connector.

7. INSTALL CRANKSHAFT TIMING PULLEY
(See page EM–18)

8. INSTALL TIMING BELT
(See page EM–18)

9. INSTALL OIL DIPSTICK

10. FILL WITH ENGINE OIL

11. START ENGINE AND CHECK FOR LEAKS

12. CHECK ENGINE OIL LEVEL

13. INSTALL HOOD

LU08H–01

REASSEMBLY

INSTALL PRESSURE REGULATOR VALVE

(a) Insert the pressure regulator valve piston, spring and retainer.
(b) Using snap ring pliers, install the snap ring.

LU08D–04

REMOVAL

HINT:

When repairing the oil pump, the oil pan and strainer should be removed and cleaned.

1. REMOVE HOOD

2. REMOVE OIL DIPSTICK

3. DRAIN ENGINE OIL

4. REMOVE TIMING BELT

(See page EM–13)

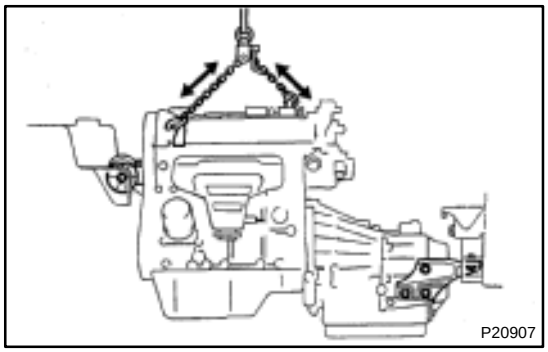

5. SUSPEND ENGINE WITH ENGINE SLING DEVICE

6. REMOVE CRANKSHAFT TIMING PULLEY

(See page EM–13)

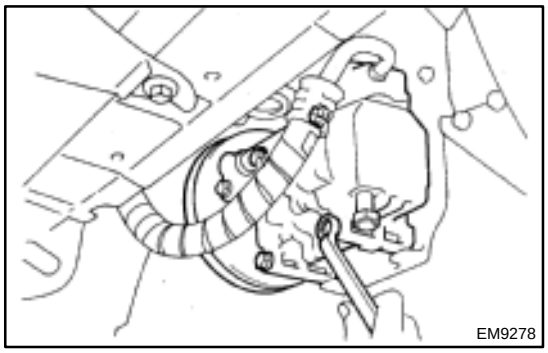

7. w/ A/C:

REMOVE A/C COMPRESSOR AND MOUNTING BRACKET

(a) Disconnect the compressor connector.

(b) Remove the 4 compressor mounting bolts.

HINT:

Put a side compressor, and suspend it.

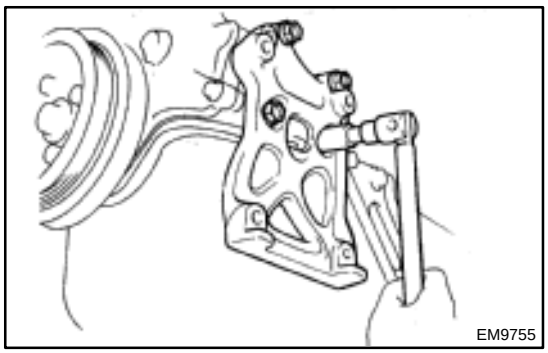

(c) Remove the 4 bolts and compressor mounting bracket.

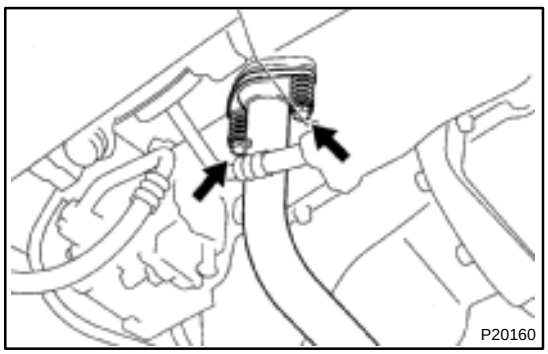

8. DISCONNECT FRONT EXHAUST PIPE

(a) Remove the 2 bolts and the 2 compresson springs.

(b) Disconnect the exhaust pipe.

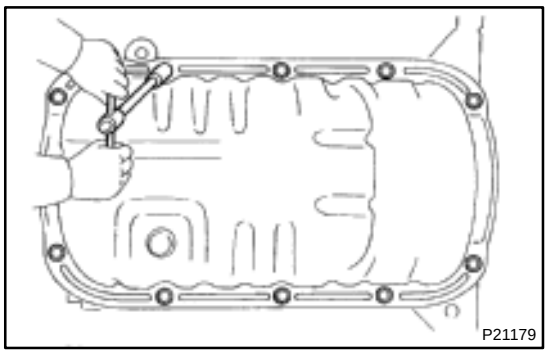

9. REMOVE OIL PAN

(a) Remove the 10 bolts.

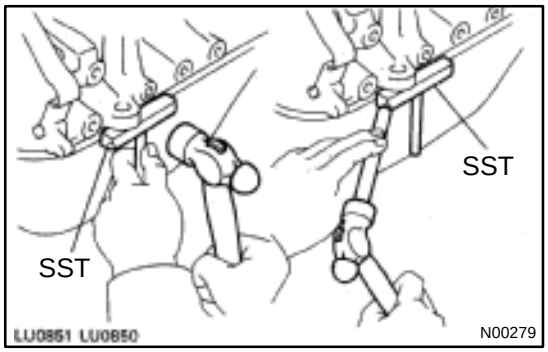

(b) Insert the SST blade between the cylinder block and oil pan, cut off applied sealer and then remove the oil pan.
SST 09032–00100

NOTICE:

Do not use SST for the oil pump body side and rear oil seal retainer. Be careful not to damage the oil pan flange.

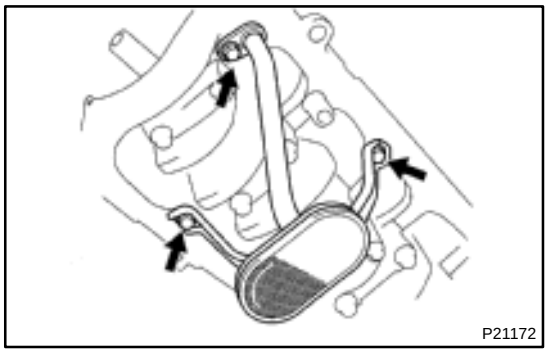

10. REMOVE OIL STRAINER

Remove the 3 bolts and oil strainer with the O–ring.

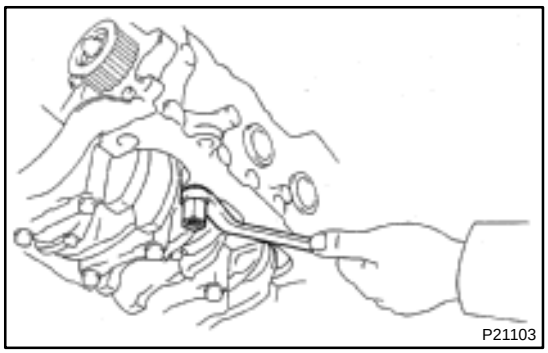

11. REMOVE PRESSURE REGULATOR VALVE

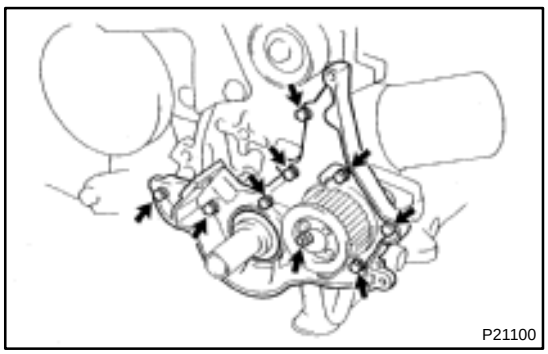

12. REMOVE OIL PUMP AND OIL PUMP PULLY

(a) Remove the 9 bolts and tension spring bracket.

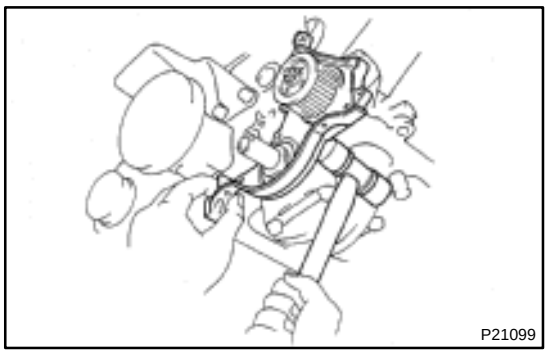

(b) Using a soft–faced hammer, carefully tap off the oil pump.
(c) Remove the oil pump body and O–ring.

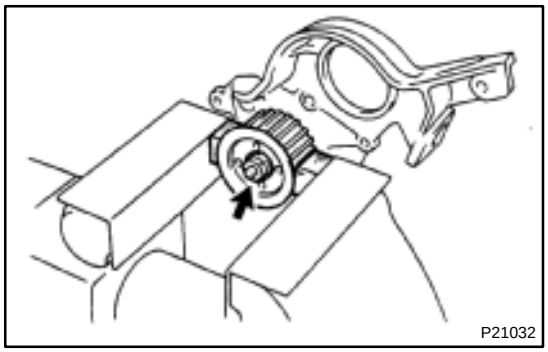

(d) Using a vise, remove the nut and oil pump pulley.

LU08G–04

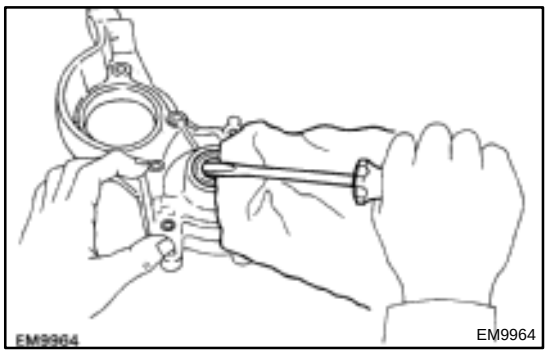

REPLACEMENT

1. REPLACE OIL PUMP OIL SEAL

(a) Using a screwdriver, pry out the oil seal.

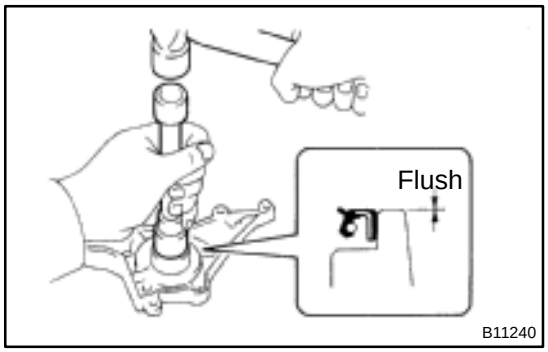

(b) Using a socket wrench and a hammer, tap in a new oil seal until its surface is flush with the oil pump cover edge.

(c) Apply MP grease to the oil seal lip.

2. REPLACE CRANKSHAFT FRONT OIL SEAL
(See page EM–81)


B05060

BODY

MA02M–04

INSPECTION

1. TIGHTEN BOLTS AND NUTS ON CHASSIS AND BODY

Tighten these parts:

- Front seat mount bolts

Torque: 37 N·m (375 kgf·cm, 27 ft·lbf)

Under Severe Conditions:

In addition to the above maintenance items, check for loose or missing nuts and bolts on the following:

- Steering system
- Drive train
- Suspension system
- Fuel tank mounts
- Engine mounts, etc.

2. FINAL INSPECTION

(a) Check the operation of the body parts:

- Hood:
  Auxiliary catch operates properly
  Hood locks securely when closed
- Front and rear doors:
  Door lock operates properly
  Doors close properly
- Luggage compartment door:
  Door lock operates properly
- Seats:
  Seat adjusts easily and locks securely in any position
  Front seat back locks securely in any position
  Folding–down rear seat backs lock securely

(b) Road test:

- Check the engine and chassis for abnormal noises.
- Check that the vehicle does not wander or pull to one side.
- Check that the brakes work properly and do not drag.

(c) Be sure to deliver a clean vehicle especially check:

- Steering wheel
- Shift lever knob
- All switch knobs
- Door handles
- Seats

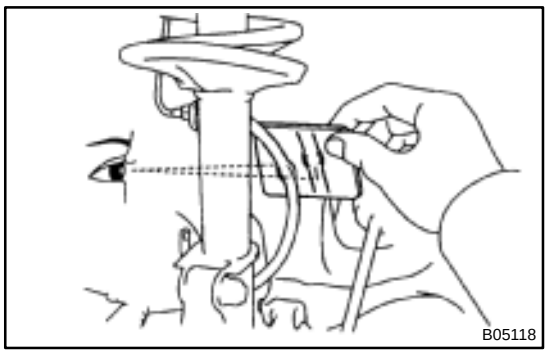

BRAKE

MA00S–08

INSPECTION

1. INSPECT BRAKE LINE PIPES AND HOSES

HINT:

Check in a well lighted area. Check the entire circumference and length of the brake hoses using a mirror as required. Turn the front wheels fully right or left before checking the front brake.

(a) Check all brake lines and hoses for:
- Damage
- Wear
- Deformation
- Cracks
- Corrosion
- Leaks
- Bends
- Twists

(b) Check all clamps for tightness and connections for leakage.

(c) Check that the hoses and lines are clear of sharp edges, moving parts and the exhaust system.

(d) Check that the lines installed in grommets pass through the center of the grommets.

2. INSPECT FRONT BRAKE PADS AND DISCS

(See page BR–25)

HINT:

If a squealing or scraping noise comes from the brake during, check the pad wear indicator to see if it is contacting the disc rotor. If so, the disc pad should be replaced.

3. INSPECT BRAKE LININGS AND DRUMS

(See page BR–32)

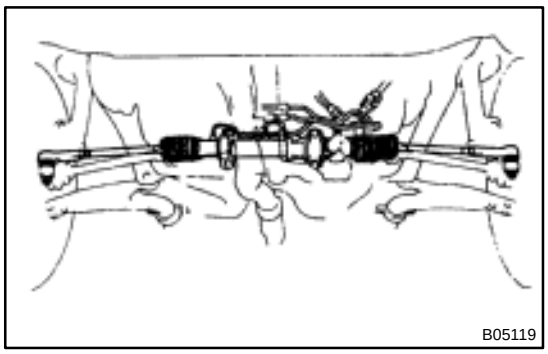

CHASSIS

MA02N–04

INSPECTION

1. INSPECT STEERING LINKAGE

(a) Check the steering wheel freeplay (See page SR–9).

(b) Check the steering linkage for looseness or damage.

Check that:

- Tie rod ends do not have excessive play.
- Dust seals and boots are not damaged.
- Boot clamps are not loose.

2. INSPECT SRS AIRBAG (See page RS–2)

3. INSPECT STEERING GEAR HOUSING OIL

Check the steering gear housing for oil leakage.

4. INSPECT DRIVE SHAFT BOOTS

Check the drive shaft boots for clamp looseness, leakage or damage.

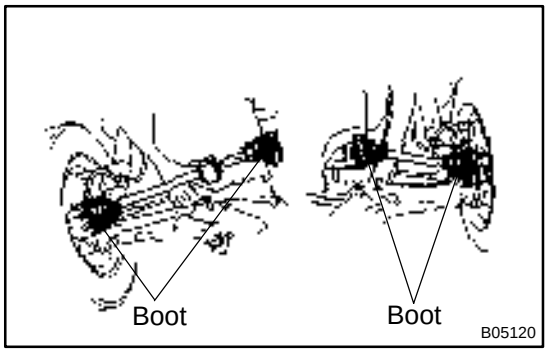

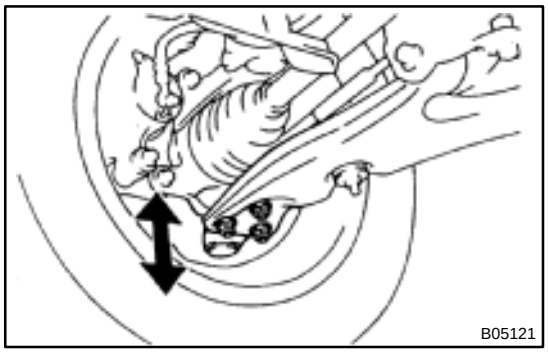

5. INSPECT BALL JOINT AND DUST COVERS

(a) Inspect the ball joints for excessive looseness.

- Jack up the front of the vehicle and place wooden blocks with a height of 180 – 200 mm (7.09 – 7.87 in.) under the front tires.
- Lower the jack until there is about half a load on the front coil spring. Place stands under the vehicle for safety.
- Make sure the front wheels are in a straightforward position and block the wheel with chocks.
- Move the lower arm up and down, and check that the ball joint has no excessive play.

Maximum ball joint vertical play: 0 mm (0 in.)

If there is play, replace the ball joint.

(b) Check the dust cover for damage.

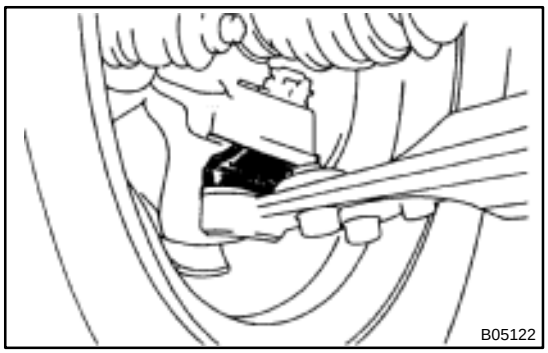

6. CHECK TRANSAXLE OIL (FLUID)

Visually check the transaxle for oil (fluid) leakage.

If leakage is found, check for the cause and repair.

7. REPLACE TRANSAXLE FLUID

(a) M/T:

Replace the transaxle oil (See page MX–3).

(b) A/T:

Replace the transaxle (transmission) fluid (See page DI–126).

8. REPACK REAR WHEEL BEARINGS

(a) Change rear wheel bearing grease.

- Remove the hub and inner and outer bearings. Clean in solvent and inspect the bearings for damage.
- Pack the bearings and axle hubs with multipurpose grease.

Wheel bearing grease grade:
Lithium base multipurpose grease (NLGI No.2)

(b) Install inner bearing and new oil seal.

(c) Install the hub and adjust the wheel bearing preload (See page SA–45).

Preload (while turning):
Add frictional force plus
0 – 12 N (0 – 1.2 kgf, 0 – 2.6 lbf)

ENGINE

INSPECTION

MA00R–10

HINT:

Inspect these items when the engine is cold.

1. **REPLACE TIMING BELT**
   (See page EM–13)
2. **INSPECT DRIVE BELTS**
   Generator: (See page CH–2)
   PS : (See page SR–3)
   A/C : (See page AC–16)

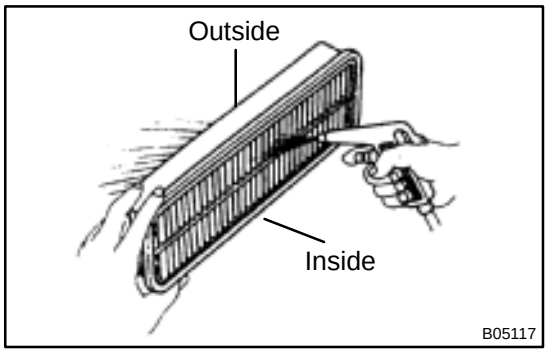

3. **INSPECT AIR FILTER**

(a) Visually check that the air filter is not excessively dirty, damaged or oily.

If necessary, replace the air filter.

(b) Clean the air filter with compressed air.
First blow from the upper side thoroughly, then blow off the lower side of the air filter.

4. **REPLACE AIR FILTER**

Replace the air filter with a new one.

5. **REPLACE SPARK PLUGS**
   (See page IG–1)
6. **REPLACE ENGINE OIL AND OIL FILTER**
   (See page LU–1)
7. **REPLACE ENGINE COOLANT**
   (See page CO–2)
8. **INSPECT CHARCOAL CANISTER**
   (See page EC–5)
9. **REPLACE GASKET IN FUEL TANK CAP**
   (See page EC–5)
10. **INSPECT FUEL LINES AND CONNECTIONS**
    (See page EC–5)
11. **INSPECT EXHAUST PIPES AND MOUNTINGS**
    (See page EC–7)
12. **ADJUST VALVE CLEARANCE**
    (See page EM–5)

INSIDE VEHICLE

MA002–19

GENERAL MAINTENANCE

These are maintenance and inspection items which are considered to be the owner's responsibility. They can be done by the owner or they can have them done at a service shop.
These items include those which should be checked on a daily basis, those which, in most cases, do not require (special) tools and those which are considered to be reasonable for the owner to do.
Items and procedures for general maintenance are as follows.

1. GENERAL NOTES

- Maintenance items may vary from country to country. Check the owner's manual supplement in which the maintenance schedule is shown.
- Every service item in the periodic maintenance schedule must be performed.
- Periodic maintenance service must be performed according to whichever interval in the periodic maintenance schedule occurs first, the odometer reading (miles) or the time interval (months).
- Maintenance service after the last period should be performed at the same interval as before unless otherwise noted.
- Failure to do even one item an cause the engine to run poorly and increase exhaust emissions.

2. LIGHTS

(a) Check that the headlights, stop lights, taillights, turn signal lights, and other lights are all working.
(b) Check the headlight aim.

3. WARNING LIGHTS AND BUZZERS

Check that all warning lights and buzzers function properly.

4. HORN

Check that it is working.

5. WINDSHIELD GLASS

Check for scratches, pits or abrasions.

6. WINDSHIELD WIPER AND WASHER

(a) Check operation of the wipers and washer.
(b) Check that the wipers do not streak.

7. WINDSHIELD DEFROSTER

Check that air comes out from the defroster outlet when operating the heater or air conditioner.

8. REAR VIEW MIRROR

Check that it is mounted securely.

9. SUN VISORS

Check that they move freely and are mounted securely.

10. STEERING WHEEL

Check that it has the specified freeplay. Be alert for changes in steering condition, such as hard steering, excessive freeplay or strange noises.

11. SEATS

(a) Check that the seat adjusters operate smoothly.
(b) Check that all latches lock securely in any position.
(c) Check that the head restraints move up and down smoothly and that the locks hold securely in any latch position.
(d) For fold–down seat backs, check that the latches lock securely.

12. SEAT BELTS

(a) Check that the seat belt system such as the buckles, retractors and anchors operate properly and smoothly.
(b) Check that the belt webbing is not cut, frayed, worn or damaged.

13. ACCELERATOR PEDAL

Check the pedal for smooth operation and uneven pedal effort or catching.

14. CLUTCH PEDAL (See page CL–2)

(a) Check the pedal for smooth operation.

(b) Check that the pedal has the proper freeplay.

15. BRAKE PEDAL (See page BR–5)

(a) Check the pedal for smooth operation.

(b) Check that the pedal has the proper reserve distance and freeplay.

(c) Check the brake booster function (See page BR–15).

16. BRAKES

At a safe place, check that the brakes do not pull to one side when applied.

17. PARKING BRAKE (See page BR–7)

(a) Check that the lever has the proper travel.

(b) On a safe incline, check that the vehicle is held securely with only the parking brake applied.

18. AUTOMATIC TRANSMISSION ”PARK” MECHANISM

(a) Check the lock release button of the selector lever for proper and smooth operation.

(b) On a safe incline, check that the vehicle is held securely with the selector lever in ”P” position and all brakes released.

OUTSIDE VEHICLE

MA001–10

GENERAL MAINTENANCE

These are maintenance and inspection items which are considered to be the owner's responsibility. They can be done by the owner or they can have them done at a service shop.
These items include those which should be checked on a daily basis, those which, in most cases, do not require (special) tools and those which are considered to be reasonable for the owner to do.
Items and procedures for general maintenance are as follows.

1. GENERAL NOTES

- Maintenance items may vary from country to country. Check the owner's manual supplement in which the maintenance schedule is shown.
- Every service item in the periodic maintenance schedule must be performed.
- Periodic maintenance service must be performed according to whichever interval in the periodic maintenance schedule occurs first, the odometer reading (miles) or the time interval (months).
- Maintenance service after the last period should be performed at the same interval as before unless otherwise noted.
- Failure to do even one item an cause the engine to run poorly and increase exhaust emissions.

2. TIRES

(a) Check the pressure with a gauge. If necessary, adjust.
(b) Check for cuts, damage or excessive wear.

3. WHEEL NUTS

When checking the tires, check the nuts for looseness or for missing nuts. If necessary, tighten them.

4. TIRE ROTATION

Check the owner's manual supplement in which the maintenance schedule is shown.

5. WINDSHIELD WIPER BLADES

Check for wear or cracks whenever they do not wipe clean. If necessary, replace.

6. FLUID LEAKS

(a) Check underneath for leaking fuel, oil, water or other fluid.
(b) If you smell gasoline fumes or notice any leak, have the cause found and corrected.

7. DOORS AND ENGINE HOOD

(a) Check that all doors and the tailgate operate smoothly, and that all latches lock securely.
(b) Check that the engine hood secondary latch secures the hood from opening when the primary latch is released.

UNDER HOOD

MA003–17

GENERAL MAINTENANCE

1. GENERAL NOTES

- Maintenance items may vary from country to country. Check the owner's manual supplement in which the maintenance schedule is shown.
- Every service item in the periodic maintenance schedule must be performed.
- Periodic maintenance service must be performed according to whichever interval in the periodic maintenance schedule occurs first, the odometer reading (miles) or the time interval (months).
- Maintenance service after the last period should be performed at the same interval as before unless otherwise noted.
- Failure to do even one item an cause the engine to run poorly and increase exhaust emissions.

2. WINDSHIELD WASHER FLUID

Check that there is sufficient fluid in the tank.

3. ENGINE COOLANT LEVEL

Check that the coolant level is between the "FULL" and "LOW" lines on the see–through reservoir.

4. RADIATOR AND HOSES

(a) Check that the front of the radiator is clean and not blocked with leaves, dirt or bugs.
(b) Check the hoses for cracks, kinks, rot or loose connections.

5. BATTERY ELECTROLYTE LEVEL

Check that the electrolyte level of all battery cells is between the upper and lower level lines on the case.

6. BRAKE AND CLUTCH FLUID LEVELS

(a) Check that the brake and clutch fluid levels are near the upper level line on the see–through reservoirs.
(b) Check that the clutch fluid level is within ± 5 mm (0.20 in.). of the reservoir hem.

7. ENGINE DRIVE BELTS

Check drive belt for fraying, cracks, wear or oiliness.

8. ENGINE OIL LEVEL

Check the level on the dipstick with the engine turned off.

9. POWER STEERING FLUID LEVEL

- Check the level.
- The level should be in the "HOT" or "COLD" range depending on the fluid temperature.

10. AUTOMATIC TRANSMISSION FLUID LEVEL

(a) Park the vehicle on a level surface.
(b) With the engine idling and the parking brake applied, shift the selector into all positions from "P" to "L", and then shift into "P" position.
(c) Pull out the dipstick and wipe off the fluid with a clean rag. Re–insert the dipstick and check that the fluid level is in the HOT range.
(d) Do this check with the fluid at normal driving temperature (70 – 80˚C, 158 – 176˚F).

HINT:

Wait until the engine cools down (approx. 30 min.) before checking the fluid level after extended driving at high speeds, in hot weather, in heavy traffic or pulling a trailer.

11. EXHAUST SYSTEM

Visually inspect for cracks, holes or loose supports.

If any change in the sound of the exhaust or smell of the exhaust fumes is noticed, have the cause located and corrected.

DIFFERENTIAL CASE

COMPONENTS

MX078–01

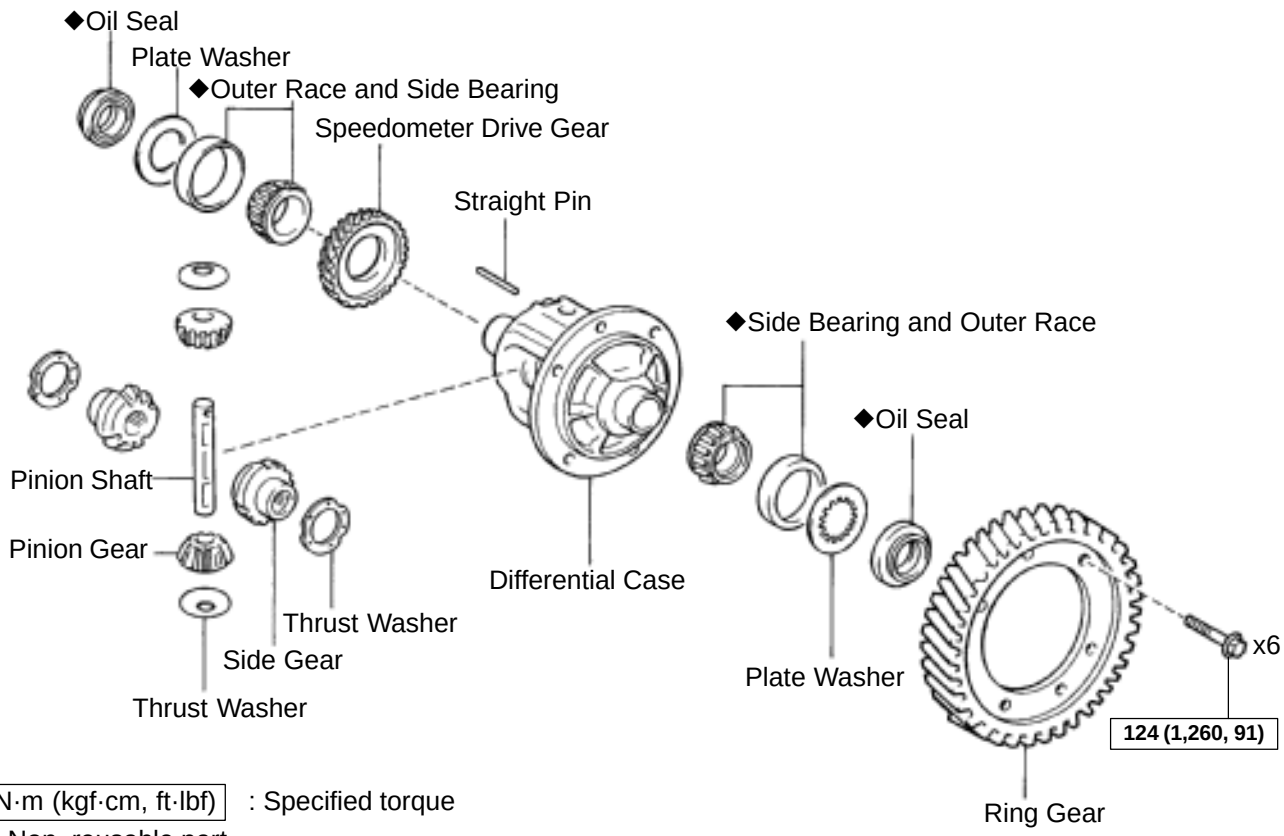

MX079–01

DISASSEMBLY

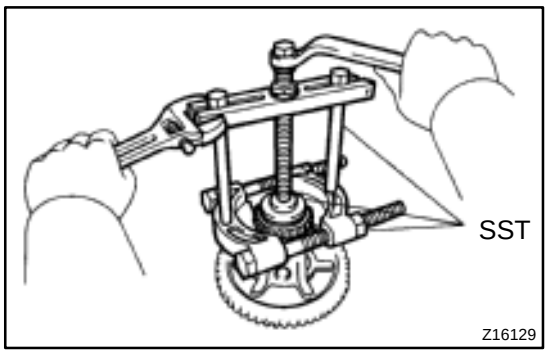

1. REMOVE SIDE BEARING FROM DIFFERENTIAL CASE

(a) Using SST, remove the bearings from both sides of the case.
SST 09950–00020, 09950–00030, 09950–60010 (09951–00360)

(b) Remove the speedometer drive gear from the RH side.

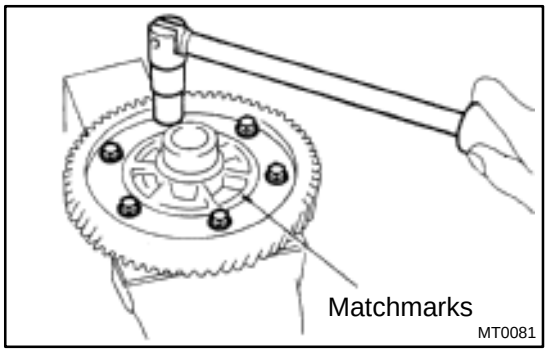

2. REMOVE RING GEAR

(a) Place matchmarks on the ring gear and case.

(b) Remove the 6 bolts.

(c) Using a plastic hammer, tap on the ring gear to remove it from the case.

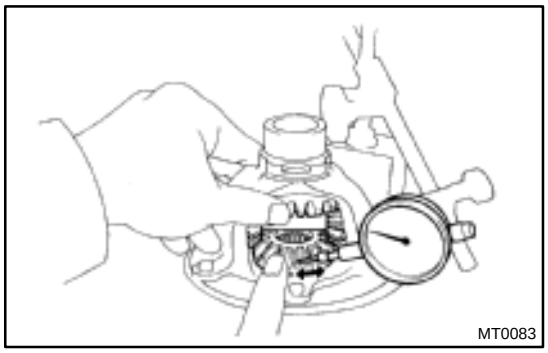

3. INSPECT SIDE GEAR BACKLASH

Using a dial indicator, measure the backlash of one side gear while holding one pinion toward the case.

Standard backlash: 0.05–0.20 mm (0.0020–0.0079 in.)

If the backlash is not within the specification, install the correct thrust washer to the side gears.

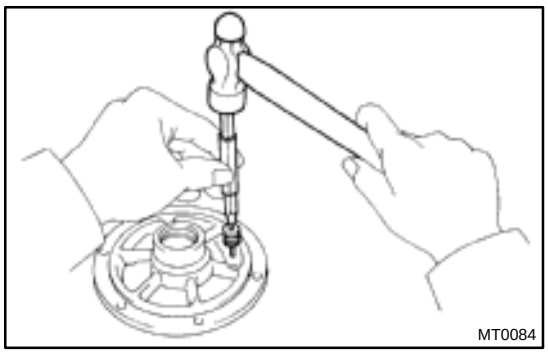

4. DISASSEMBLE DIFFERENTIAL CASE

(a) Using a pin punch and hammer, drive out the pinion shaft straight pin.

(b) Remove the pinion shaft from the case.

(c) Remove the 2 pinion gears and side gears with the 4 thrust washers from each gear.

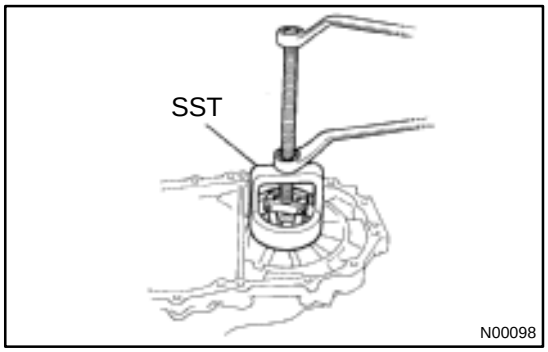

5. Transmission Case Side:
IF NECESSARY, REPLACE OIL SEAL AND SIDE BEARING OUTER RACE

(a) Using a screwdriver and hammer, drive out the oil seal.

(b) Using SST, pull out the outer race and plate washer.
SST 09612–65014

(c) Place the plate washer into the case.

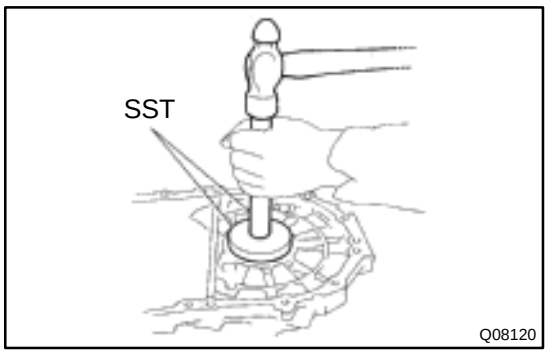

(d) Using SST and a hammer, drive in a new outer race.
SST 09950–60020 (09951–00710), 09950–70010 (09951–07150)

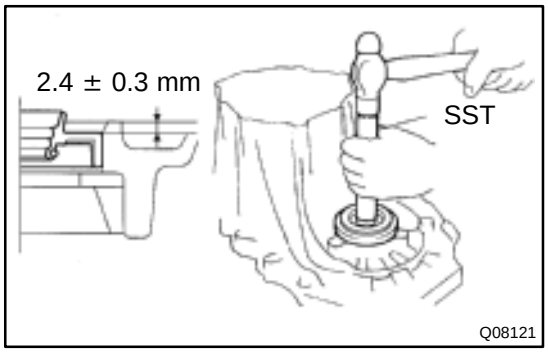

(e) Using SST and a hammer, drive in a new oil seal.
SST 09350–32014 (09351–32111, 09351–32130)
Drive in depth: 2.4 ± 0.3 mm (0.094 ± 0.012 in.)

(f) Coat the lip of the oil seal with MP grease.

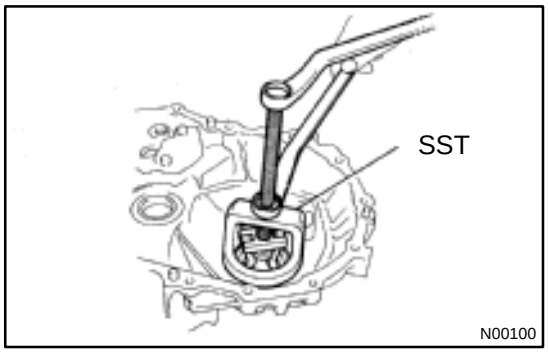

6. Transaxle Case Side:
IF NECESSARY, REPLACE OIL SEAL AND SIDE BEARING OUTER RACE

(a) Using a screwdriver and hammer, drive out the oil seal.

(b) Using SST, pull out the outer race and plate washer.
SST 09612–65014

(c) Place the plate washer into the case.

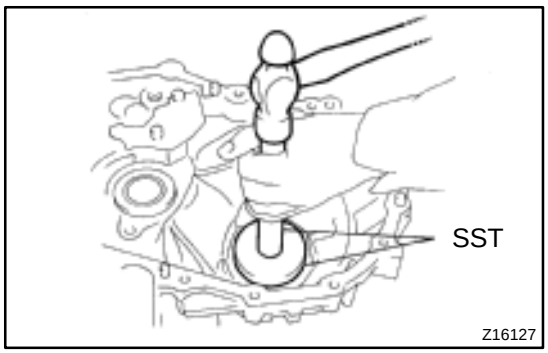

(d) Using SST and a hammer, drive in a new outer race.
SST 09950–60020 (09951–00680), 09950–70010 (09951–07150)

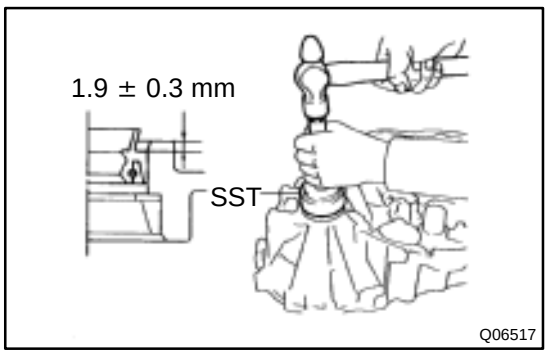

(e) Using SST and a hammer, drive in a new oil seal.
SST 09350–32014 (09351–32130, 09351–32150)
Drive in depth: 1.9 ± 0.3 mm (0.075 ± 0.012 in.)

(f) Coat the lip of the oil seal with MP grease.

MX07A–07

REASSEMBLY

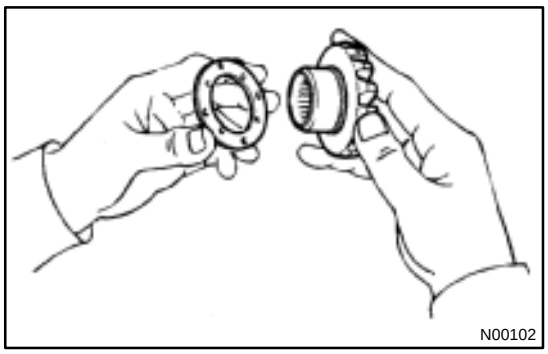
N00102

1. ASSEMBLE DIFFERENTIAL CASE

(a) Install the correct thrust washers and side gears.
Refer to the table below, select thrust washers which will ensure that the backlash is within the specification. Try to select washers of the same size for both sides.
Standard backlash: 0.05–0.20 mm (0.0020–0.0079 in.)

Thickness mm (in.)	Thickness mm (in.)
1.50 (0.0591)	1.65 (0.0650)
1.55 (0.0610)	1.70 (0.0669)
1.60 (0.0630)	1.75 (0.0689)

(b) Install the thrust washers and side gears in the differential case.
(c) Install the pinion shaft.

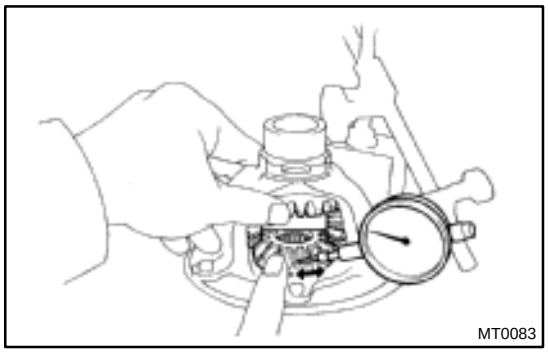
MT0083

(d) Using a dial indicator, check the side gear backlash.
Measure the side gear backlash while holding one pinion gear toward the case.
Standard backlash: 0.05–0.20 mm (0.0020–0.0079 in.)

If the backlash is not within the specification, install a thrust washer of different thickness.

(e) Using a pin punch and hammer, drive in the straight pin through the case and hole in the pinion shaft.
(f) Stake the differential case.

2. INSTALL RING GEAR ON DIFFERENTIAL CASE

(a) Clean the contact surface of the differential case.
(b) Heat the ring gear in boiling water.
(c) Carefully remove the ring gear from the water.
(d) After the moisture on the ring gear has completely evaporated, quickly install the ring gear to the differential case.

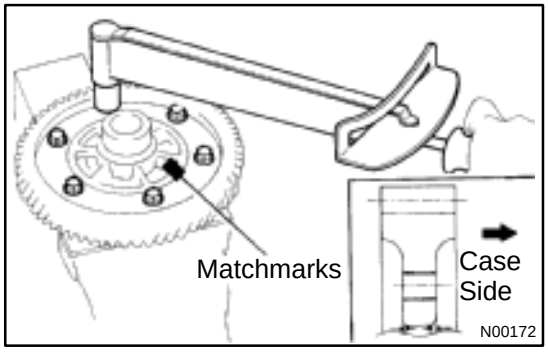

N00172

HINT:
Align the matchmarks on the differential case and contact the ring gear.

(e) Install the 6 set bolts. Tighten each set bolt uniformly, a little at a time in succession. Torque the bolts.
Torque: 124 N·m (1,260 kgf·cm, 91 ft·lbf)

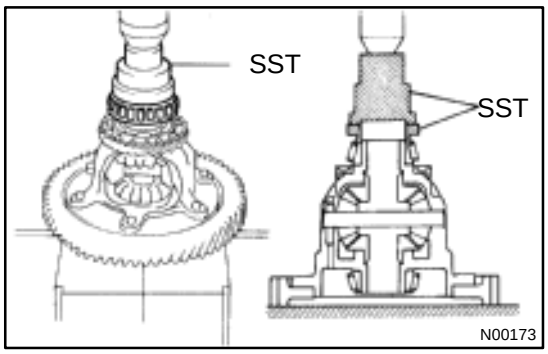

3. INSTALL SIDE BEARING

(a) Install the speedometer drive gear to the RH side.

(b) Using SST and a press, install new side bearings to the both sides of the case.

SST 09350–32014 (09351–32090, 09351–32120)

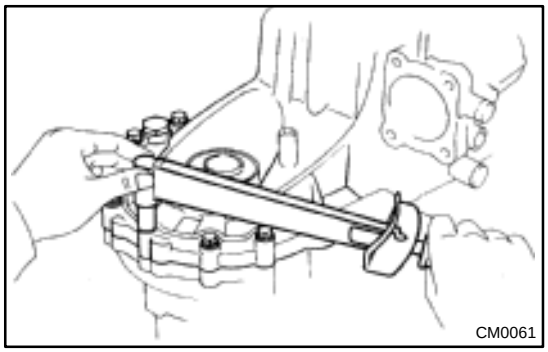

4. INSPECT DIFFERENTIAL SIDE BEARING PRELOAD

(a) Install the differential case assembly to the transaxle case.

(b) Install the transmission case.

(c) Install and torque the case bolts.

Torque: 29 N·m (300 kgf·cm, 22 ft·lbf)

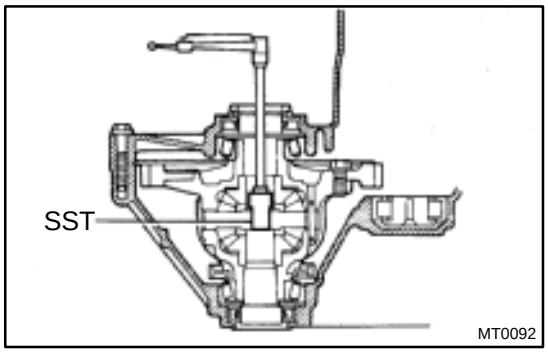

(d) Using SST and a torque wrench, measure the preload.

SST 09564–32011

Preload (at starting):

New bearing

0.8–1.6 N·m (8–16 kgf·cm, 6.9–13.9 in.·lbf)

Reused bearing

0.5–1.0 N·m (5–10 kgf·cm, 4.3–8.7 in.·lbf)

If the preload is not within the specification, remove the transmission case side outer race of the side bearing with SST (See page MX–36).

(e) Select another shim.

HINT:

The preload will change by about 0.3–0.4 N·m (3–4 kgf·cm, 2.6–3.5 in.·lbf) corresponding to a change of 0.05 mm in shim thickness.

Mark	Thickness mm (in.)	Mark	Thickness mm (in.)
A	2.10 (0.0827)	L	2.60 (0.1024)
B	2.15 (0.0846)	M	2.65 (0.1043)
C	2.20 (0.0866)	N	2.70 (0.1063)
D	2.25 (0.0886)	P	2.75 (0.1083)
E	2.30 (0.0906)	Q	2.80 (0.1102)
F	2.35 (0.0925)	R	2.85 (0.1122)
G	2.40 (0.0945)	S	2.90 (0.1142)
H	2.45 (0.0965)	T	2.95 (0.1161)
J	2.50 (0.0984)	U	3.00 (0.1181)
K	2.55 (0.1004)	–	–

INPUT SHAFT

COMPONENTS

MX06Z–01

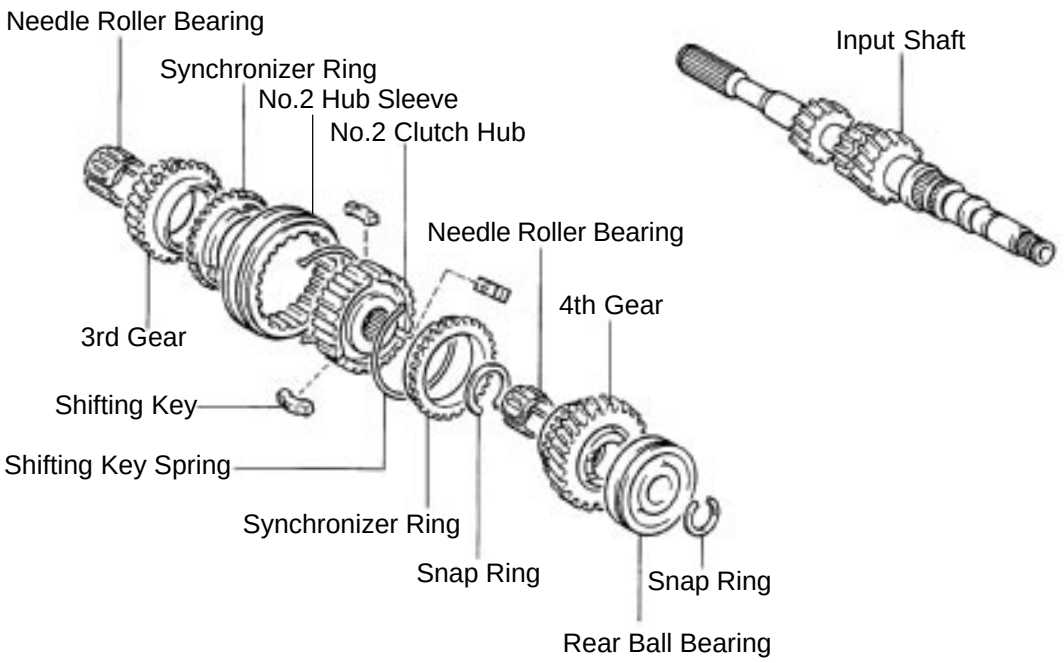

Q06510

MX070–01

DISASSEMBLY

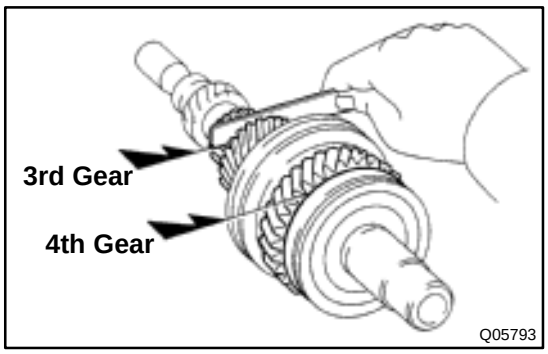

1. INSPECT 3RD AND 4TH GEARS THRUST CLEARANCE

Using a feeler gauge, measure the thrust clearance.

Standard clearance:
3rd gear: 0.10–0.35 mm (0.0039–0.0138 in.)
4th gear: 0.10–0.55 mm (0.0039–0.0217 in.)
Maximum clearance:
3rd gear: 0.40 mm (0.0157 in.)
4th gear: 0.60 mm (0.0236 in.)

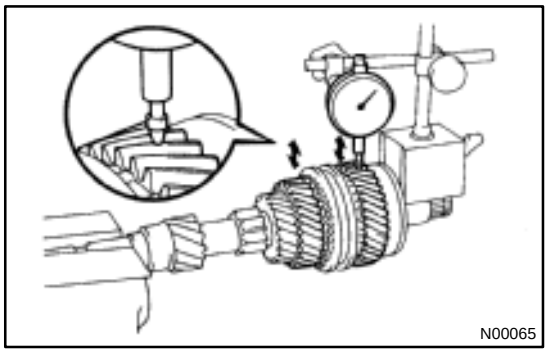

2. INSPECT 3RD AND 4TH GEARS RADIAL CLEARANCE

Using a dial indicator, measure the radial clearance between the gear and shaft.

Standard clearance:
0.015–0.058 mm (0.0006–0.0023 in.)
Maximum clearance:
0.070 mm (0.0028 in.)

If the clearance exceeds the maximum, replace the gear, needle roller bearing or shaft.

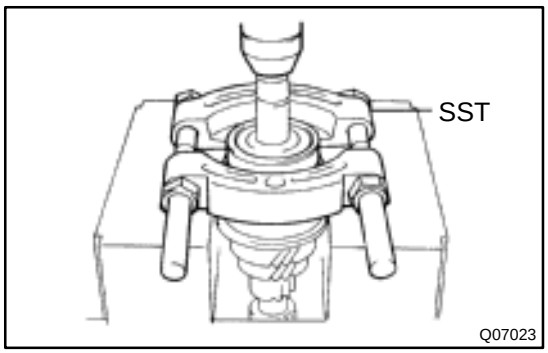

3. REMOVE SNAP RING

Using 2 screwdrivers and a hammer, tap out the snap ring.

4. REMOVE REAR BALL BEARING, 4TH GEAR, NEEDLE ROLLER BEARING, SPACER AND SYNCHRONIZER RING FROM INPUT SHAFT

(a) Using SST and a press, remove the rear ball bearing.
SST 09950–00020

(b) Remove the 4th gear, needle roller bearings, spacer and synchronizer ring.

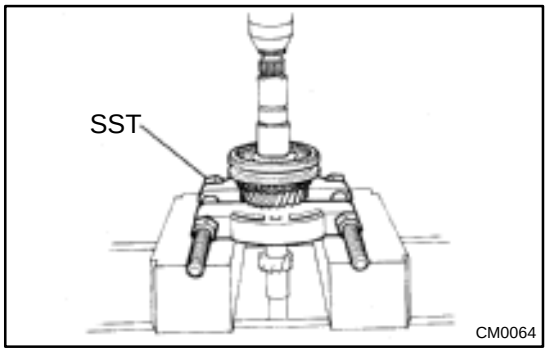

5. REMOVE SNAP RING

Using 2 screwdrivers and a hammer, tap out the snap ring.

6. REMOVE NO.2 HUB SLEEVE ASSEMBLY, 3RD GEAR, SYNCHRONIZER RING AND NEEDLE ROLLER BEARING

Using SST and a press, remove the No.2 hub sleeve assembly, 3rd gear, synchronizer ring and needle roller bearings.

SST 09950–00020

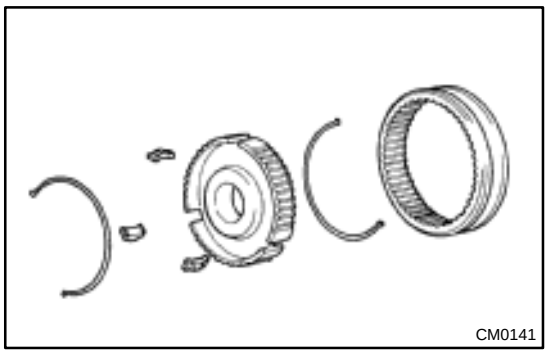

7. REMOVE NO.2 HUB SLEEVE, SHIFTING KEY AND SPRING FROM NO.2 CLUTCH HUB

Using a screwdriver, remove the 3 shifting keys and 2 springs from the No.2 clutch hub.

MX071–01

INSPECTION

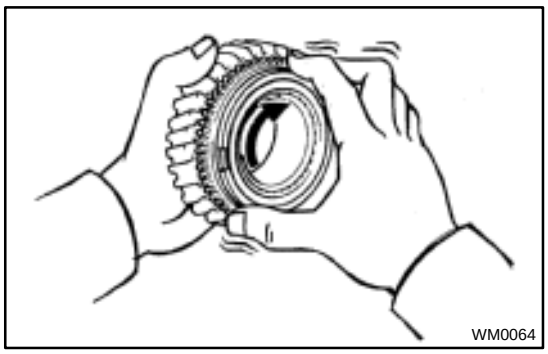
WM0064

1. INSPECT SYNCHRONIZER RING

(a) Check for wear or damage.

(b) Check the braking effect of the synchronizer ring. Turn the synchronizer ring in one direction while pushing it to the gear cone. Check that the ring locks.

If the braking effect is insufficient, apply a small amount of fine lapping compound between the synchronizer ring and gear cone. Lightly rub the synchronizer ring and gear cone together.

NOTICE:

Ensure the fine lapping compound is completely washed off after rubbing.

(c) Check again the braking effect of the synchronizer ring.

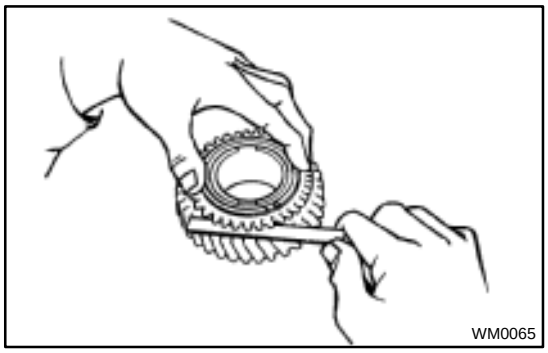
WM0065

(d) Using a feeler gauge, measure the clearance between the synchronizer ring back and gear spline end.

Minimum clearance: 0.6 mm (0.024 in.)

If the clearance is less than the minimum, replace the synchronizer ring and apply a small amount of the fine lapping compound on gear cone.

NOTICE:

Ensure the fine lapping compound is completely washed off after rubbing.

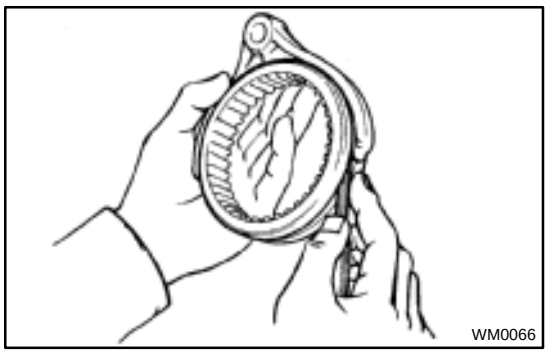
WM0066

2. INSPECT SHIFT FORK AND HUB SLEEVE CLEARANCE

Using a feeler gauge, measure the clearance between the hub sleeve and shift fork.

Maximum clearance: 1.0 mm (0.039 in.)

If the clearance exceeds the maximum, replace the shift fork or hub sleeve.

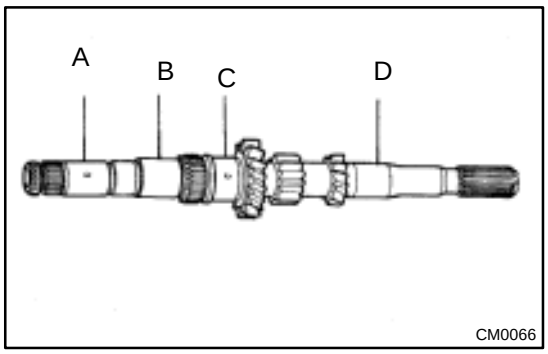

3. INSPECT INPUT SHAFT

(a) Check the input shaft for wear or damage.

(b) Using a micrometer, measure the outer diameter of the input shaft journal surface.

Minimum outer diameter:
Part A: 24.870 mm (0.9791 in.)
Part B: 28.970 mm (1.1405 in.)
Part C: 30.970 mm (1.2193 in.)
Part D: 24.970 mm (0.9831 in.)

If the outer diameter is less than the minimum, replace the input shaft.

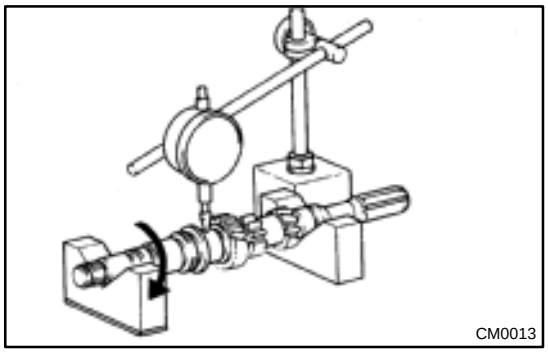

(c) Using a dial indicator, check the shaft runout.

Maximum runout: 0.05 mm (0.0020 in.)

If the runout exceeds the maximum, replace the input shaft.

MX072–01

REASSEMBLY

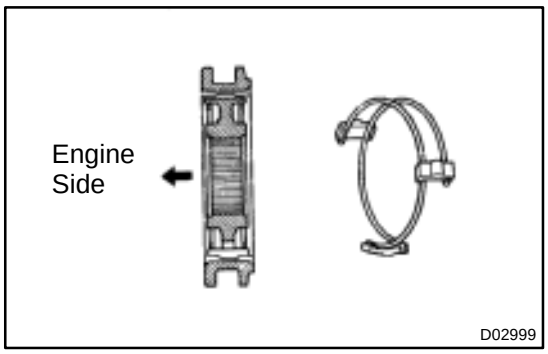

HINT:

Coat all of the sliding and rotating surfaces with gear oil before assembly.

1. INSTALL NO.2 CLUTCH HUB INTO HUB SLEEVE

(a) Install the clutch hub and shifting keys to the hub sleeve.

(b) Install the shifting key springs under the shifting keys.

NOTICE:

Position the key springs so that their end gaps are not in line.

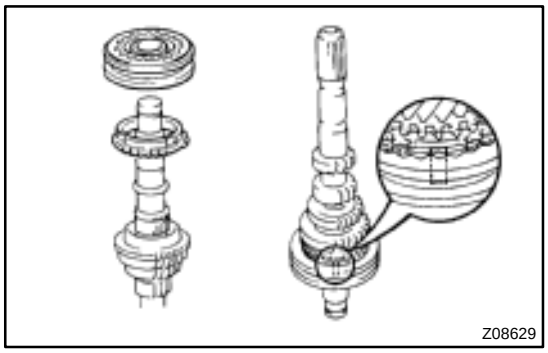

2. INSTALL 3RD GEAR, NEEDLE ROLLER BEARING, SYNCHRONIZER RING AND NO.2 HUB SLEEVE ASSEMBLY TO INPUT SHAFT

(a) Apply gear oil to the needle roller bearings.

(b) Place the synchronizer ring on the gear and align the ring slots with the shifting keys.

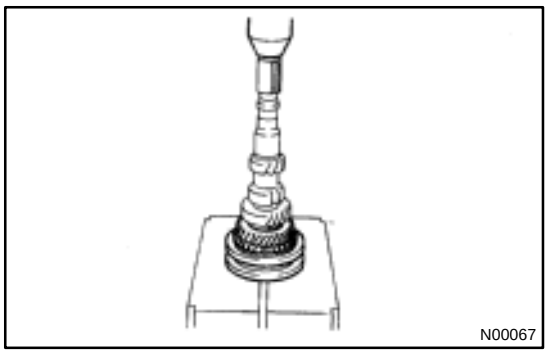

(c) Using a press, install the 3rd gear and No.2 hub sleeve assembly.

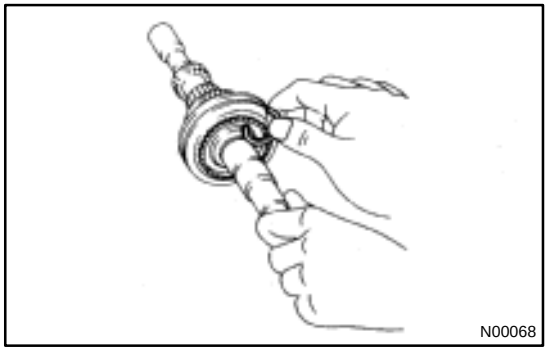

3. INSTALL SNAP RING

(a) Select a snap ring that allows the minimum axial play.

Mark	Thickness mm (in.)	Mark	Thickness mm (in.)
0	2.30 (0.0906)	3	2.48 (0.0976)
1	2.36 (0.0929)	4	2.54 (0.1000)
2	2.42 (0.0953)	5	2.60 (0.1024)

(b) Using a screwdriver and hammer, tap in the snap ring.

4. INSPECT 3RD GEAR THRUST CLEARANCE
(See page MX–21)

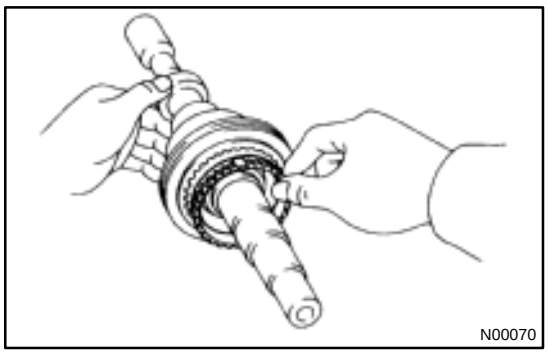

5. INSTALL SYNCHRONIZER RING, NEEDLE ROLLER BEARING, SPACER, 4TH GEAR AND REAR BALL BEARING

(a) Apply gear oil to the needle roller bearings.

(b) Place the synchronizer ring on the gear and align the ring slots with the shifting keys.

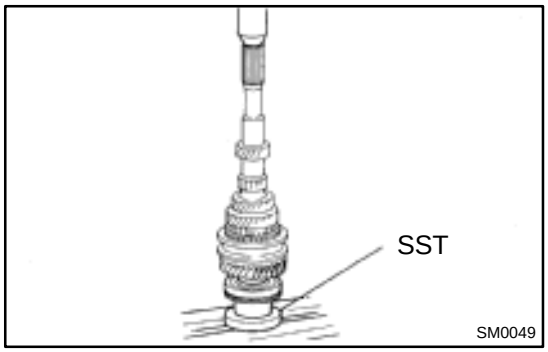

(c) Using SST and a press, install the rear ball bearing.
SST 09608–00071

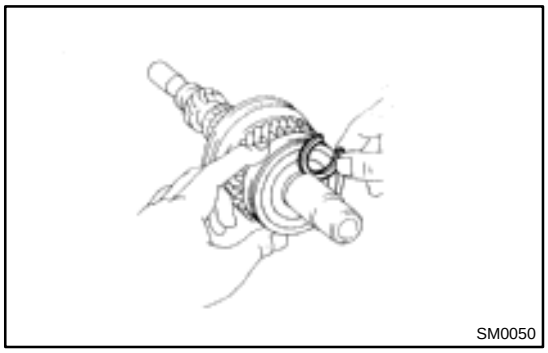

6. INSTALL SNAP RING

(a) Select a snap ring that allows the minimum axial play.

Mark	Thickness mm (in.)	Mark	Thickness mm (in.)
A	2.29 (0.0902)	D	2.47 (0.0972)
B	2.35 (0.0925)	E	2.53 (0.0996)
C	2.41 (0.0949)	F	2.59 (0.1020)

(b) Using a screwdriver and hammer, tap in the snap ring.

7. INSPECT 4TH GEAR THRUST CLEARANCE
(See page MX–21)

MANUAL TRANSAXLE ASSEMBLY

MX06V–01

COMPONENTS

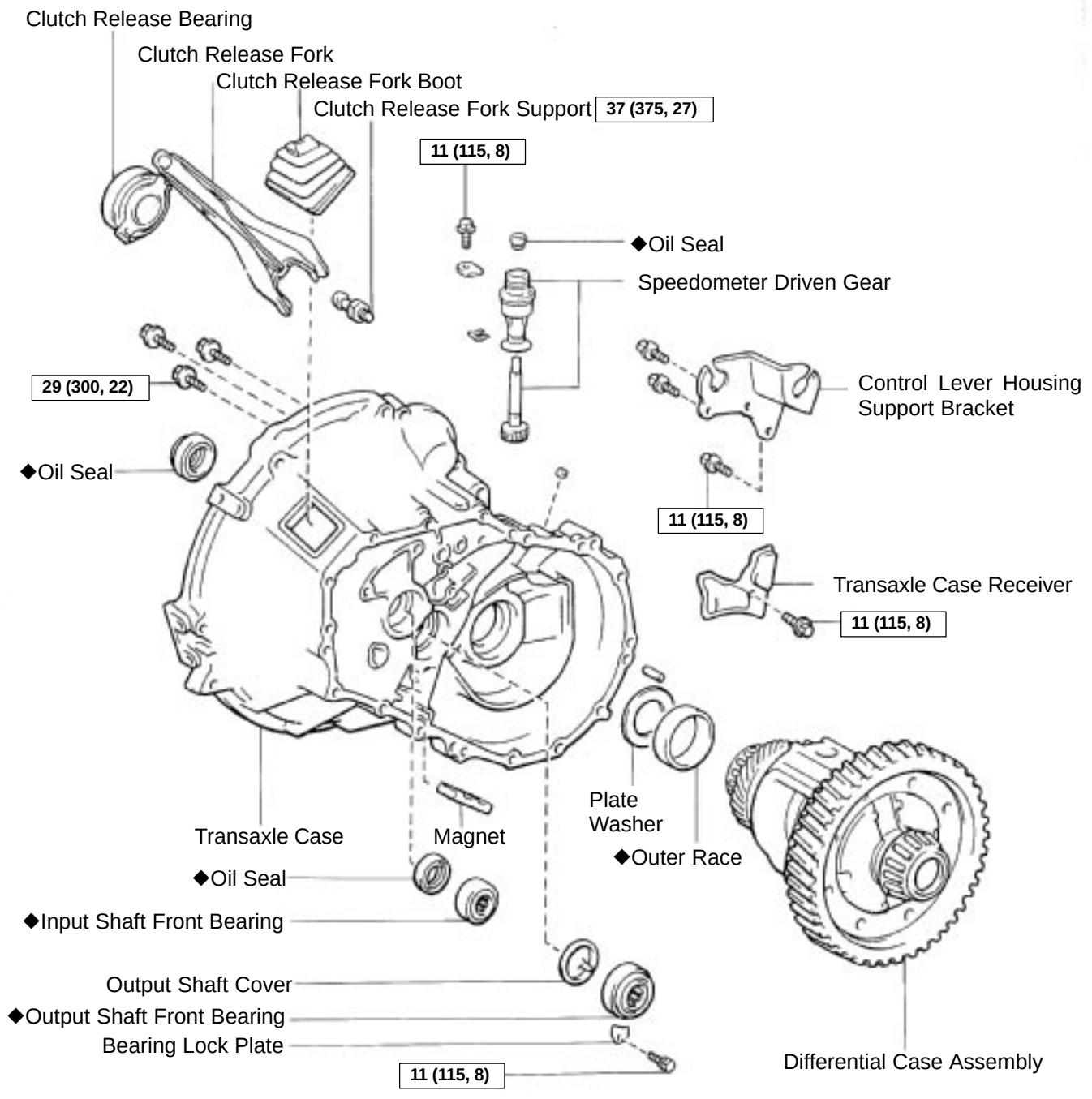

N·m (kgf·cm, ft·lbf) : Specified torque

◆ Non–reusable part

Z15942

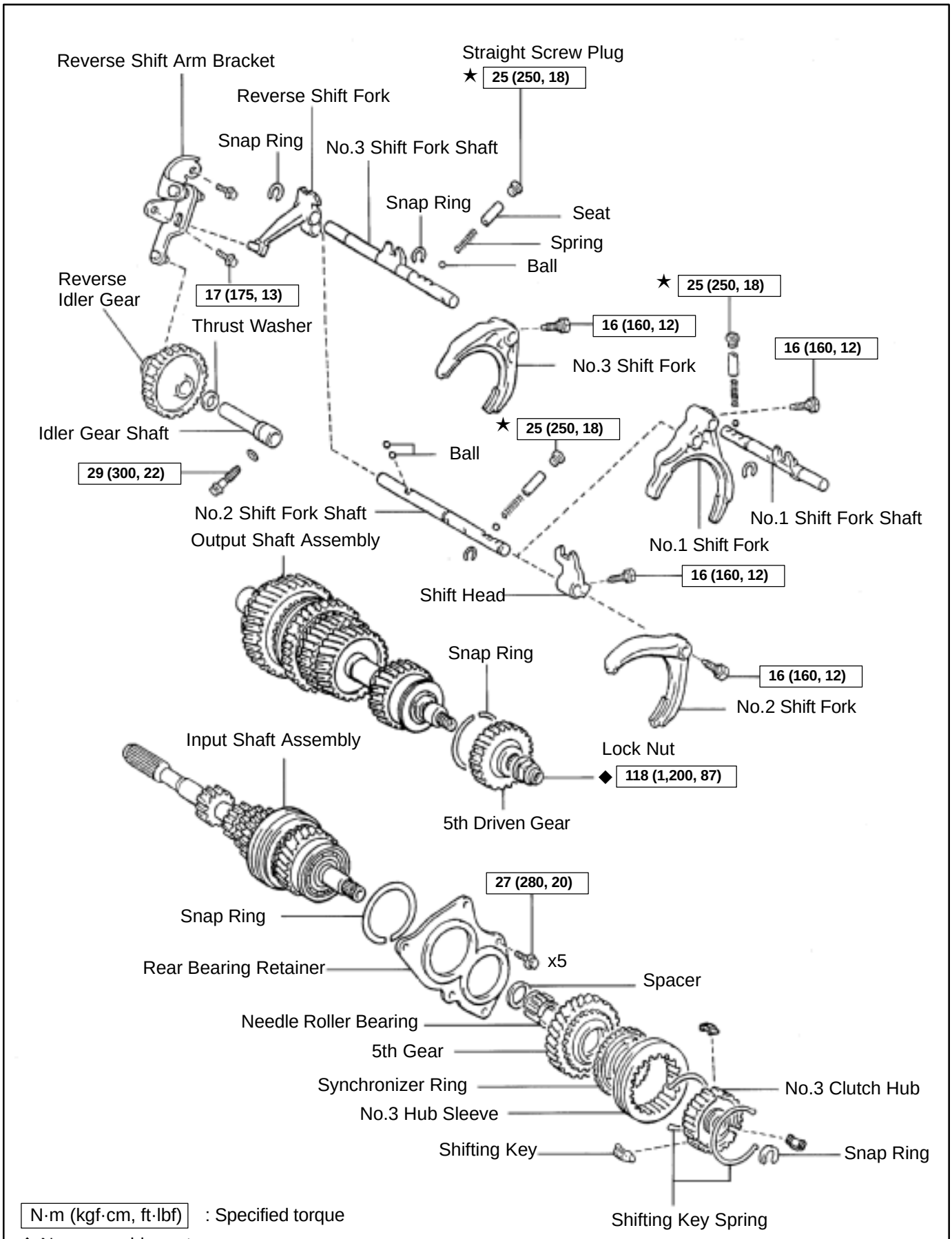

N·m (kgf·cm, ft·lbf) : Specified torque
◆ Non–reusable part
★ Precoated part

Z18919

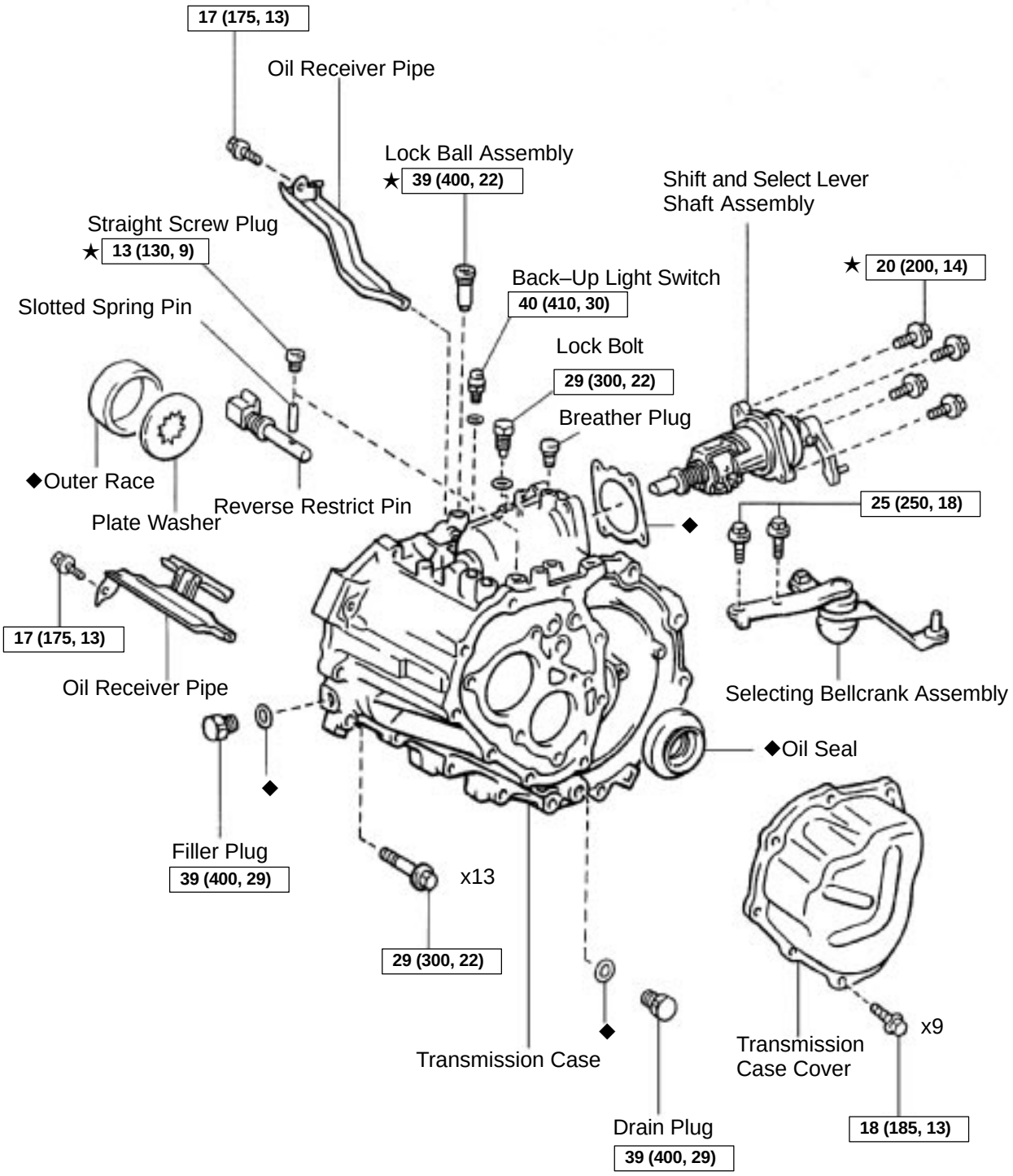

N·m (kgf·cm, ft·lbf) : Specified torque
◆ Non–reusable part
★ Precoated part

Z18973

MX06W–03

DISASSEMBLY

1. REMOVE RELEASE FORK AND BEARING

HINT:

At the time of reassembly, please refer to the following item.

Apply molybdenum disulphide lithium base grease (See page CL–18).

2. REMOVE SPEEDOMETER DRIVEN GEAR

Remove the driven gear lock plate set bolt and driven gear.

Torque: 11 N·m (115 kgf·cm, 8 ft·lbf)

3. REMOVE BACK–UP LIGHT SWITCH

Torque: 40 N·m (410 kgf·cm, 30 ft·lbf)

4. REMOVE CONTROL LEVER HOUSING SUPPORT BRACKET

Remove the 3 bolts and bracket.

Torque: 11 N·m (115 kgf·cm, 8 ft·lbf)

5. REMOVE SELECTING BELLCRANK ASSEMBLY

Remove the 2 bolts and selecting bellcrank assembly.

Torque: 25 N·m (250 kgf·cm, 18 ft·lbf)

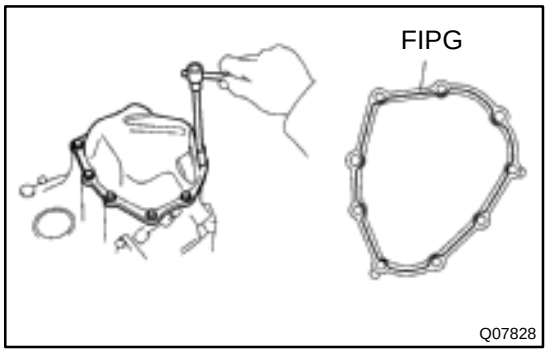

6. REMOVE TRANSMISSION CASE COVER

(a) Remove the 9 bolts.

Torque: 18 N·m (185 kgf·cm, 13 ft·lbf)

(b) Carefully tap the projection of the transmission case cover with a brass hammer and remove it.

FIPG:

Part No. 08826–00090, THREE BOND 1281 or equivalent

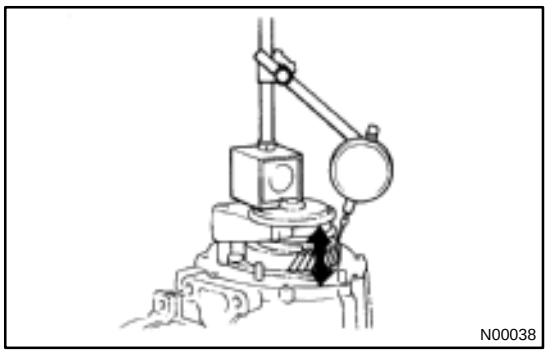

7. INSPECT 5TH GEAR THRUST CLEARANCE

Using a dial indicator, measure the thrust clearance.

Standard clearance:
0.10–0.57 mm (0.0039–0.0224 in.)
Maximum clearance:
0.65 mm (0.0256 in.)

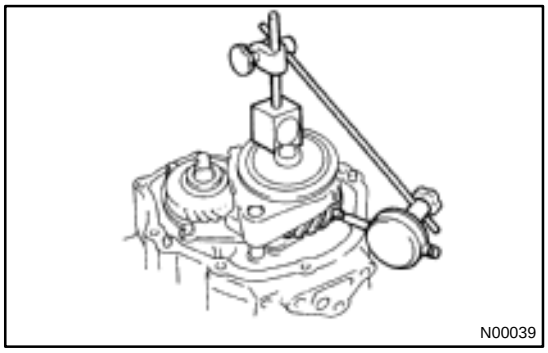

8. INSPECT 5TH GEAR RADIAL CLEARANCE

Using a dial indicator, measure the radial clearance.

Standard clearance:
0.015–0.058 mm (0.0006–0.0023 in.)
Maximum clearance:
0.070 mm (0.0028 in.)

If the clearance exceeds the maximum, replace the gear, needle roller bearing or shaft.

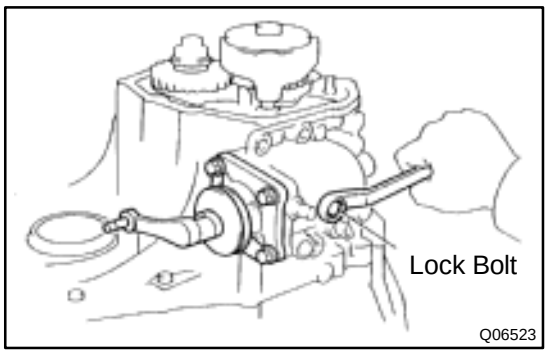

9. REMOVE SHIFT AND SELECT LEVER SHAFT ASSEMBLY

(a) Remove the lock bolt.
Torque: 29 N·m (300 kgf·cm, 22 ft·lbf)

(b) Remove the 4 bolts and pull out the shift and select lever shaft assembly with the gasket.
Sealant:
Part No.08833–00080, THREE BOND 1344, LOCTITE 242 or equivalent
Torque: 20 N·m (200 kgf·cm, 14 ft·lbf)

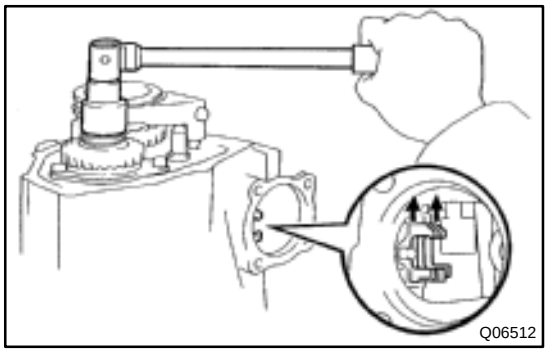

10. REMOVE LOCK NUT

(a) Engage the gear to the double meshing.

(b) Using a chisel and hammer, loosen the staked part of the nut.

(c) Remove the lock nut.
Torque: 118 N·m (1,200 kgf·cm, 87 ft·lbf)

(d) Disengage the double meshing of the gear.

11. REMOVE NO.3 HUB SLEEVE AND NO.3 SHIFT FORK

(a) Remove the bolt from the No.3 shift fork.
Torque: 16 N·m (160 kgf·cm, 12 ft·lbf)

(b) Remove the No.3 hub sleeve and shift fork.

12. REMOVE NO.3 CLUTCH HUB AND 5TH GEAR

(a) Using 2 screwdrivers and a hammer, tap out the snap ring.

HINT:
Select a snap ring that allows the minimum axial play.

Mark	Thickness mm (in.)	Mark	Thickness mm (in.)
A	2.25 (0.0886)	E	2.49 (0.0980)
B	2.31 (0.0909)	F	2.55 (0.1004)
C	2.37 (0.0933)	G	2.61 (0.1028)
D	2.43 (0.0957)	–	–

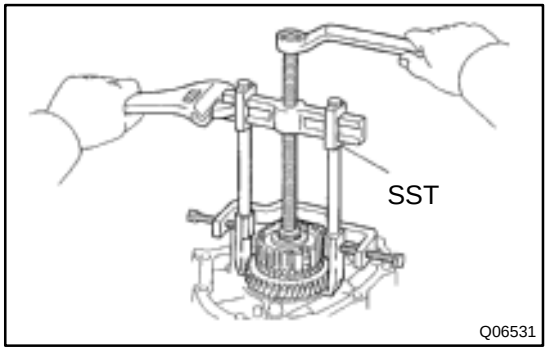

(b) Using SST, remove the 5th gear, No.3 clutch hub, synchronizer ring, needle roller bearings and spacer.
SST 09950–40010

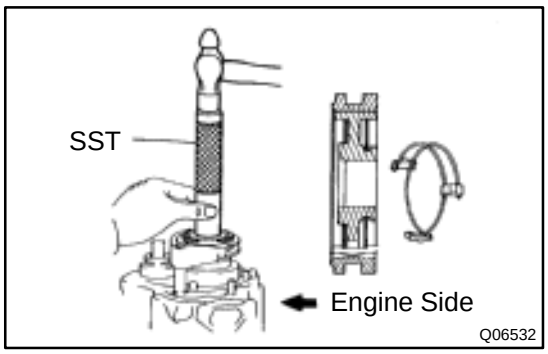

HINT:
At the time of reassembly, please refer to the following item.
- Install the No.3 clutch hub and shifting keys to the hub sleeve.
- Install the shifting key springs under the shifting keys.
- Support the tip of the input shaft with a spacer or such to raise the transaxle assembly.
- Using SST and a hammer, drive in the No.3 hub sleeve assembly with the No.3 shift fork.
  SST 09612–22011

NOTICE:
At the time of reassembly, please refer to the following item.
- **Align the synchronizer ring slots with the shifting keys.**
- **Position the key springs so that their end gaps are not in line.**

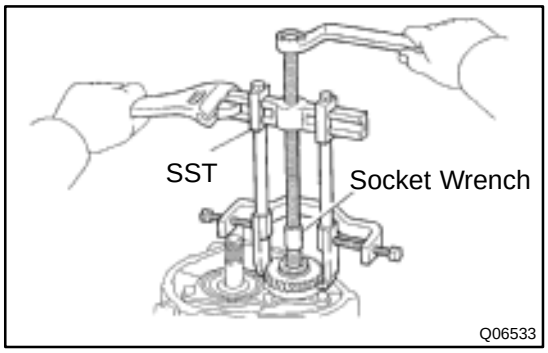

13. REMOVE 5TH DRIVEN GEAR
Using SST and a socket wrench, remove the 5th driven gear.
SST 09950–40010

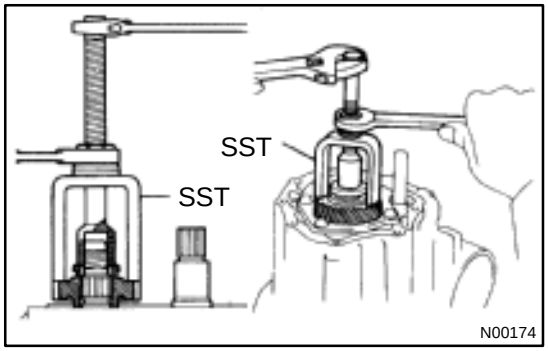

HINT:
At the time of reassembly, please refer to the following item.
Using SST, install the 5th driven gear.
SST 09309–12020

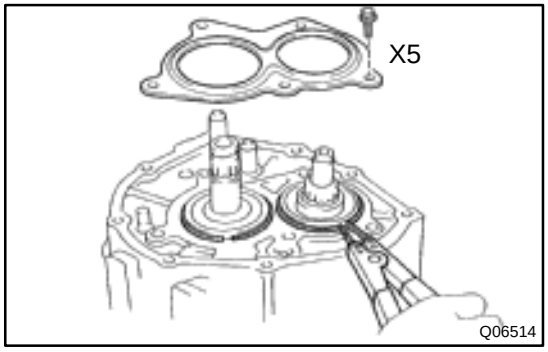

14. REMOVE REAR BEARING RETAINER
Remove the 5 bolts and retainer.
Torque: 27 N·m (280 kgf·cm, 20 ft·lbf)

15. REMOVE BEARING SNAP RING
Using a snap ring expander, remove the 2 snap rings.
HINT:
If it is difficult to remove and install the snap rings, pull up the shafts.

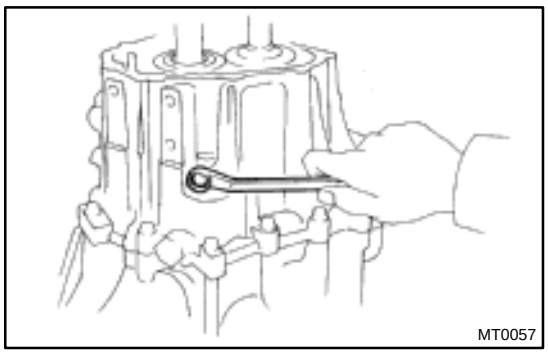

16. REMOVE REVERSE IDLER GEAR SHAFT LOCK BOLT
Torque: 29 N·m (300 kgf·cm, 22 ft·lbf)

17. REMOVE SNAP RING FROM NO.2 SHIFT FORK SHAFT

Using 2 screwdrivers and a hammer, tap out the snap ring.

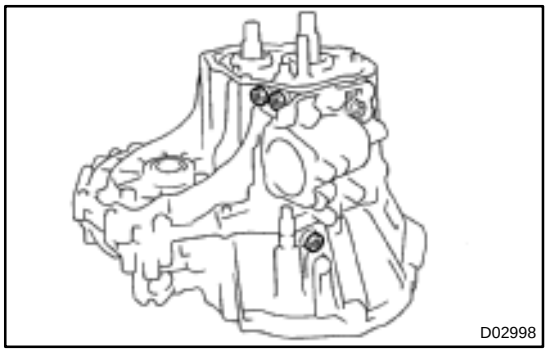

18. REMOVE STRAIGHT SCREW PLUG, SEAT, SPRING AND BALL

(a) Using a hexagon wrench, remove the 3 plugs.
Sealant:
Part No.08833–00080, THREE BOND 1344, LOCTITE 242 or equivalent
Torque: 25 N·m (250 kgf·cm, 18 ft·lbf)

(b) Using a magnetic finger, remove the 3 seats, springs and balls.

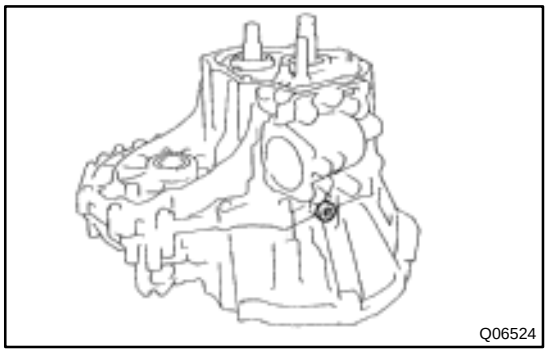

19. REMOVE LOCK BALL ASSEMBLY

Using a hexagon wrench, remove the lock ball assembly.
Sealant:
Part No.08833–00080, THREE BOND 1344, LOCTITE 242 or equivalent
Torque: 39 N·m (400 kgf·cm, 29 ft·lbf)

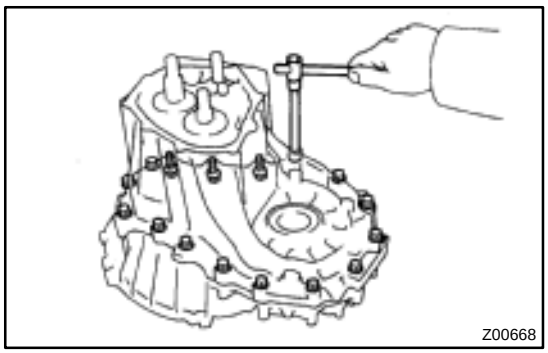

20. REMOVE TRANSMISSION CASE

(a) Remove the 16 bolts.
Torque: 29 N·m (300 kgf·cm, 22 ft·lbf)

(b) Carefully tap the transmission case with a plastic hammer and remove it.

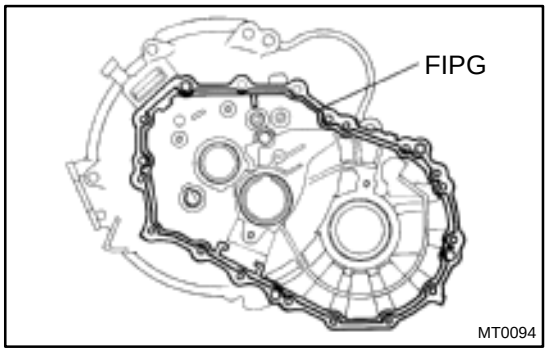

FIPG:
Part No. 08826–00090, THREE BOND 1281 or equivalent

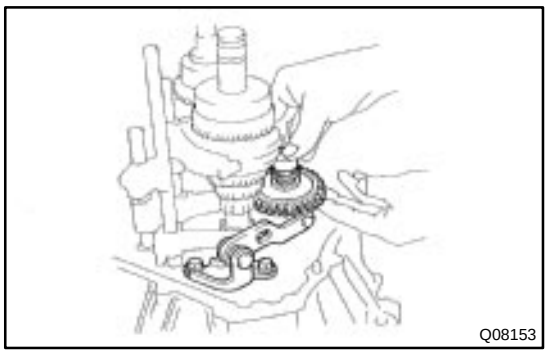
Q08153

21. REMOVE REVERSE IDLER GEAR, THRUST WASHER AND SHAFT

22. REMOVE REVERSE SHIFT ARM BRACKET

Remove the 2 bolts and bracket.

Torque: 17 N·m (175 kgf·cm, 13 ft·lbf)

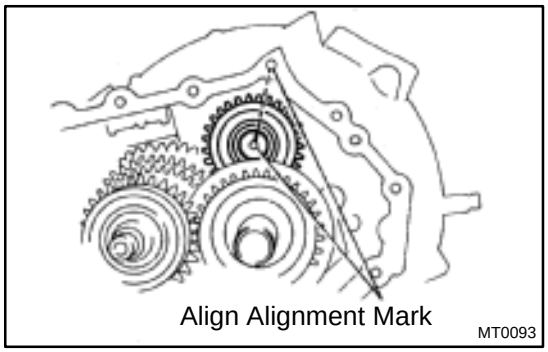

MT0093

HINT:

At the time of reassembly, please refer to the following item.

Install the reverse idler gear, thrust washer and shaft, as shown.

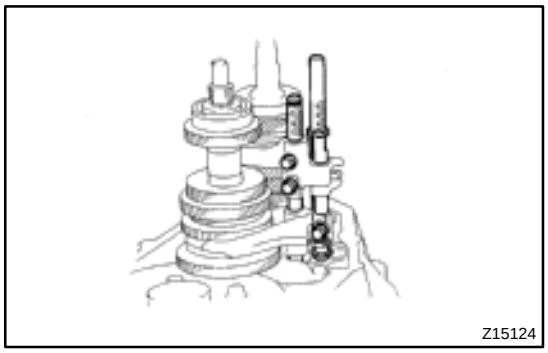
Z15124

23. REMOVE SHIFT FORK AND SHIFT FORK SHAFT

(a) Using 2 screwdrivers and a hammer, tap out the 3 snap rings.

(b) Remove the 3 set bolts.

Torque: 16 N·m (160 kgf·cm, 12 ft·lbf)

(c) Remove the No.2 shift fork shaft and shift head.

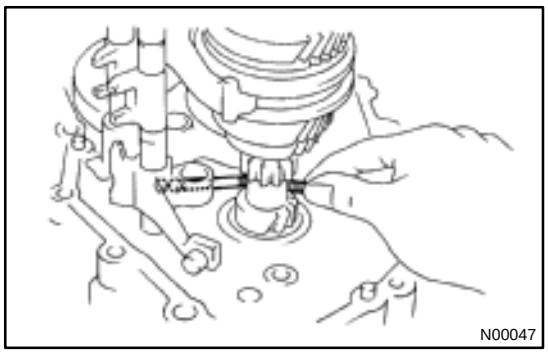
N00047

(d) Using a magnetic finger, remove the 2 balls from the reverse shift fork.

(e) Remove the No.3 shift fork shaft and reverse shift fork.

(f) Pull out the No.1 shift fork shaft.

(g) Remove the No.1 and No.2 shift forks.

24. REMOVE INPUT AND OUTPUT SHAFTS TOGETHER FROM TRANSAXLE CASE

25. REMOVE DIFFERENTIAL CASE ASSEMBLY

HINT:

At the time of reassembly, please refer to the following item.

Before assembly, inspect the differential side bearing preload.

26. REMOVE MAGNET FROM TRANSAXLE CASE

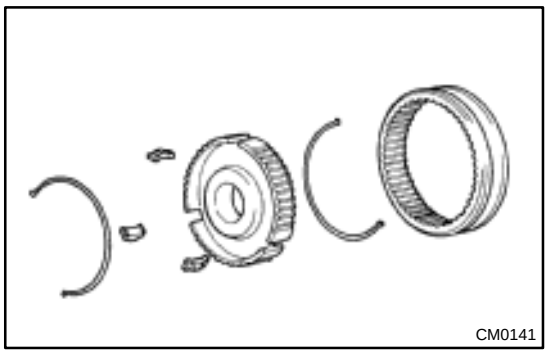

27. REMOVE NO.3 HUB SLEEVE, SHIFTING KEY AND SPRING FROM NO.3 CLUTCH HUB

Using a screwdriver, remove the 3 shifting keys and 2 springs from the No.3 clutch hub.

MX06X–01

INSPECTION

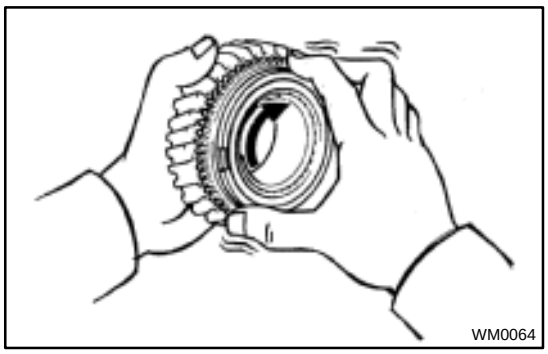
WM0064

1. INSPECT 5TH GEAR SYNCHRONIZER RING

(a) Check for wear or damage.

(b) Check the braking effect of the synchronizer ring. Turn the synchronizer ring in one direction while pushing it to the gear cone. Check that the ring locks.

If the braking effect is insufficient, apply a small amount of fine lapping compound between the synchronizer ring and gear cone. Lightly rub the synchronizer ring and gear cone together.

NOTICE:

Ensure the fine lapping compound is completely washed off after rubbing.

(c) Check again the braking effect of the synchronizer ring.

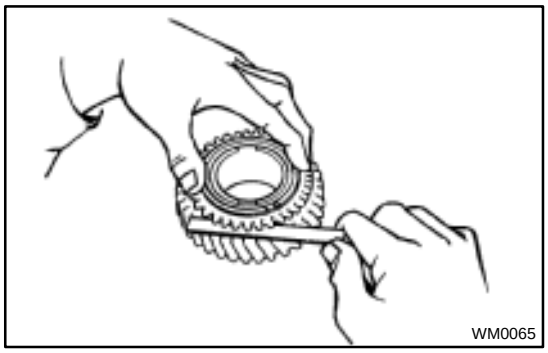
WM0065

(d) Using a feeler gauge, measure the clearance between the synchronizer ring back and gear spline end.

Minimum clearance:
0.6 mm (0.024 in.)

If the clearance is less than the minimum, replace the synchronizer ring and gear cone by applying a small amount of fine lapping compound.

NOTICE:

Ensure the fine lapping compound is completely washed off after rubbing.

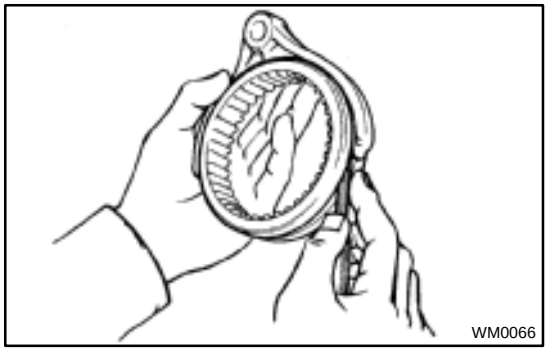
WM0066

2. INSPECT SHIFT FORK AND HUB SLEEVE CLEARANCE

Using a feeler gauge, measure the clearance between the hub sleeve and shift fork.

Maximum clearance: 1.0 mm (0.039 in.)

If the clearance exceeds the maximum, replace the shift fork or hub sleeve.

3. REMOVE TRANSAXLE CASE RECEIVER

Remove the bolt and transaxle case receiver.

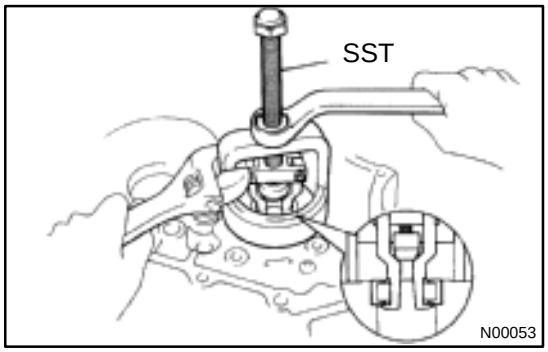

N00053

4. IF NECESSARY, REPLACE INPUT SHAFT FRONT BEARING AND OIL SEAL

(a) Using SST, remove the bearing.

SST 09612–65014

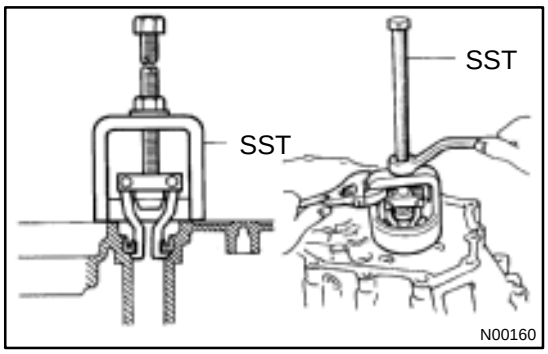

(b) Using SST, remove the oil seal.
SST 09612–65014

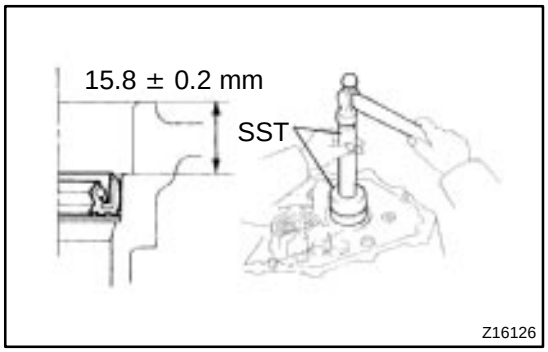

(c) Using SST and a hammer, drive in a new oil seal.
SST 09950–60010 (09951–00360), 09950–70010 (09951–07150)
Drive in depth: 15.8 ± 0.2 mm (0.622 ± 0.008 in.)

(d) Coat the lip of the oil seal with MP grease.

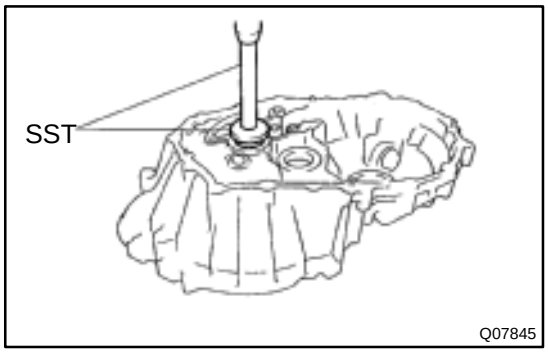

(e) Using SST and a press, install a new bearing.
SST 09950–60010 (09951–00460), 09950–70010 (09951–07150)

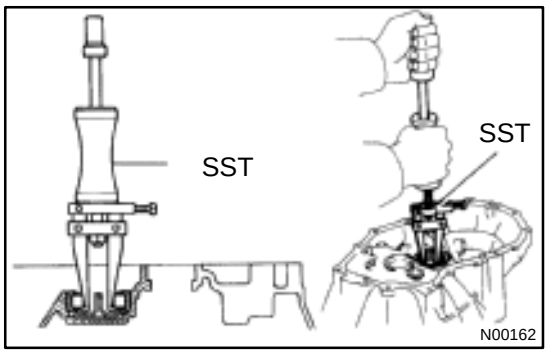

5. IF NECESSARY, REPLACE OUTPUT SHAFT FRONT BEARING AND OUTPUT SHAFT COVER

(a) Remove the bolt and bearing lock plate.

(b) Using SST, pull out the bearing.
SST 09308–00010

(c) Remove the output shaft cover.

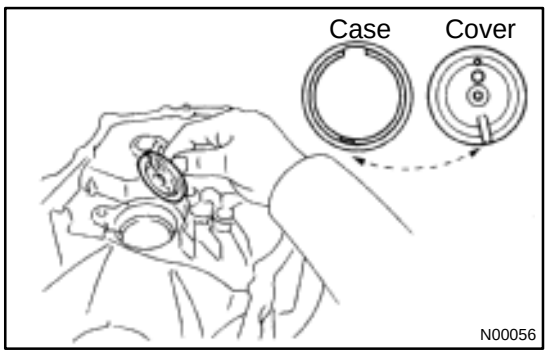

(d) Install the output shaft cover.

HINT:
Install the output shaft cover projection into the case side hollow.

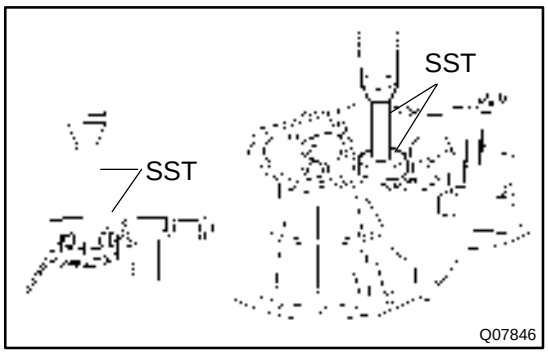

(e) Using SST and a press, install a new bearing.
SST 09950–60010 (09951–00620), 09950–70010 (09951–07150)

(f) Install the bearing lock plate and torque the bolt.
Torque: 11 N·m (115 kgf·cm, 8 ft·lbf)

6. INSTALL TRANSAXLE CASE RECEIVER

Install the transaxle case receiver and torque the bolt.
Torque: 11 N·m (115 kgf·cm, 8 ft·lbf)

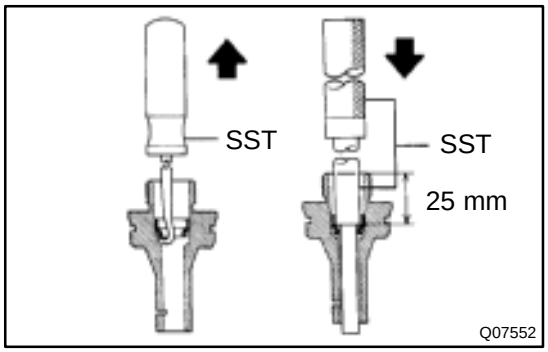

7. IF NECESSARY, REPLACE SPEEDOMETER DRIVEN GEAR OIL SEAL

(a) Using SST, remove the oil seal.
SST 09921–00010

(b) Using SST, drive in a new oil seal.
SST 09201–10000 (09201–01080), 09950–70010 (09951–07150)
Drive in depth: 25 mm (0.98 in.)

(c) Coat the lip of oil seal with MP grease.

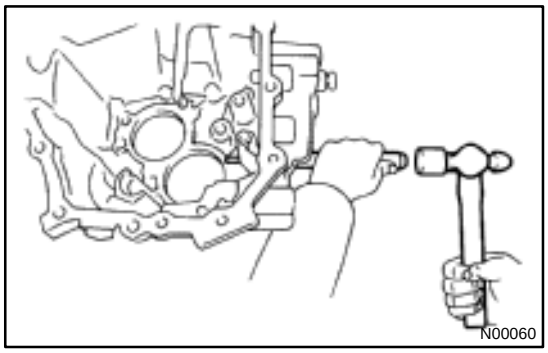

8. IF NECESSARY, REPLACE REVERSE RESTRICT PIN

(a) Using a hexagon wrench, remove the straight screw plug.

(b) Using a pin punch and hammer, drive out the slotted spring pin.

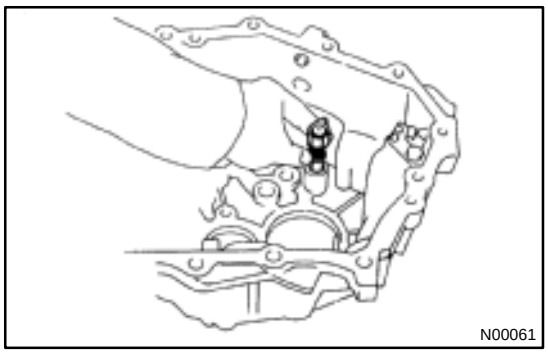

(c) Replace the reverse restrict pin.

(d) Using a pin punch and hammer, drive in the slotted spring pin.

(e) Apply sealant to the plug threads.
Sealant:
Part No.08833–00080, THREE BOND 1344, LOCTITE 242 or equivalent

(f) Using a hexagon wrench, install the straight screw plug.
Torque: 13 N·m (130 kgf·cm, 9 ft·lbf)

MX06Y–01

REASSEMBLY

Reassembly is in the reverse order of disassembly (See page MX–10).

HINT:

Coat all of the sliding and rotating surfaces with gear oil before reassembly.

NOTICE:

When working with FIPG material, you must observe the following items.

- **Using a razor blade and gasket scraper, remove all the old FIPG material from the gasket surfaces.**
- **Thoroughly clean all components to remove all the loose material.**
- **Clean both sealing surfaces with a non–residue solvent.**
- **Apply FIPG in an approx. 1 mm (0.04 in.) wide bead along the sealing surface.**
- **Part must be assembled within 10 minutes of application. Otherwise, the FIPG material must be removed and reapplied.**

MANUAL TRANSAXLE UNIT

COMPONENTS

MX06S–03

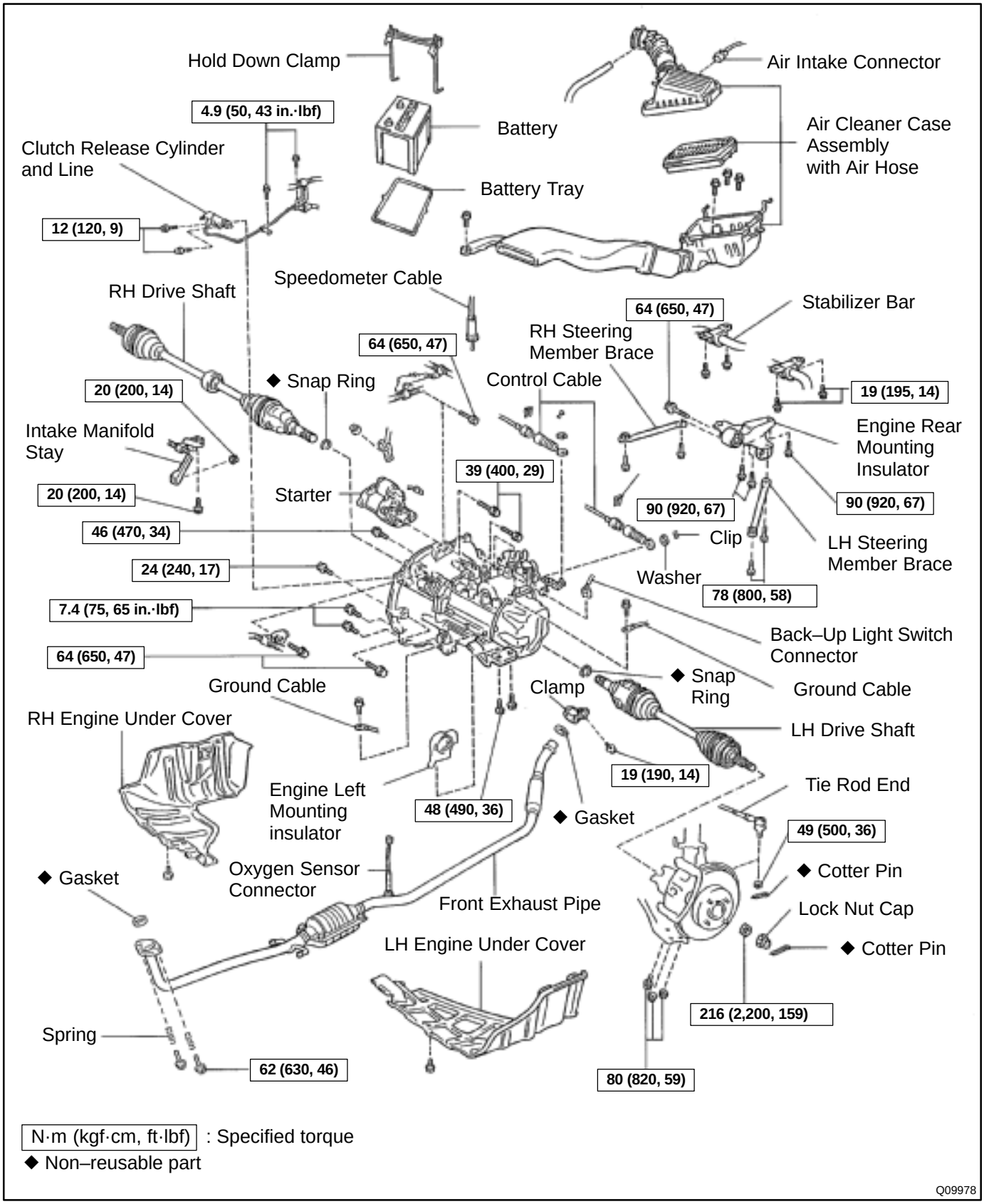

N·m (kgf·cm, ft·lbf) : Specified torque
◆ Non–reusable part

Q09978

MX06U–01

INSTALLATION

Installation is in the reverse order of removal (See page MX–3).

HINT:

After installation, check and inspect items as follows.

- Front wheel alignment (See page SA–4).
- Do the road test.

MX06T–02

REMOVAL

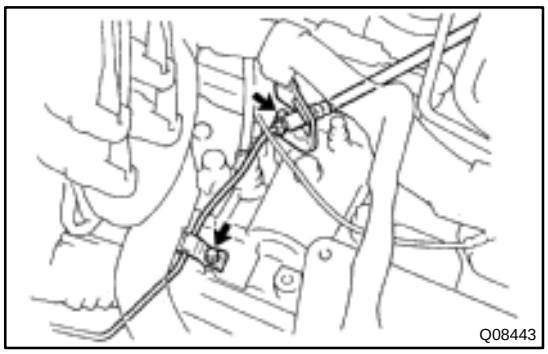

1. REMOVE BATTERY AND AIR CLEANER CASE ASSEMBLY WITH AIR HOSE

2. REMOVE CLUTCH RELEASE CYLINDER AND LINE

(a) Remove the 2 set bolts of the clutch line bracket.
Torque: 4.9 N·m (50 kgf·cm, 43 in.·lbf)

(b) Remove the 2 bolts and release cylinder and line.
Torque: 12 N·m (120 kgf·cm, 9 ft·lbf)

3. DISCONNECT BACK–UP LIGHT SWITCH CONNECTOR

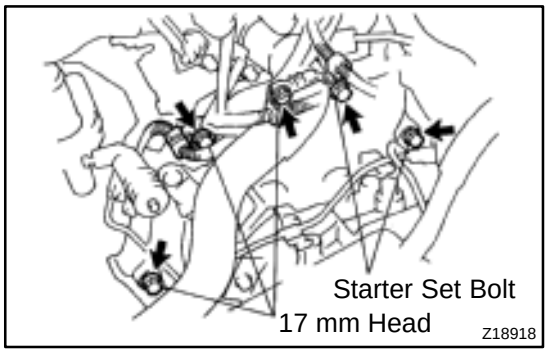

4. DISCONNECT CONTROL CABLE

(a) Remove the 2 clips and washers.

(b) Remove the 2 clips from the cables.

5. REMOVE STARTER SET BOLT

Remove the 2 set bolts of the starter from the transaxle upper side.

Torque: 39 N·m (400 kgf·cm, 29 ft·lbf)

6. REMOVE TRANSAXLE MOUNTING BOLT

Remove the 3 bolts from transaxle upper side.

Torque:
17 mm head: 64 N·m (650 kgf·cm, 47 ft·lbf)

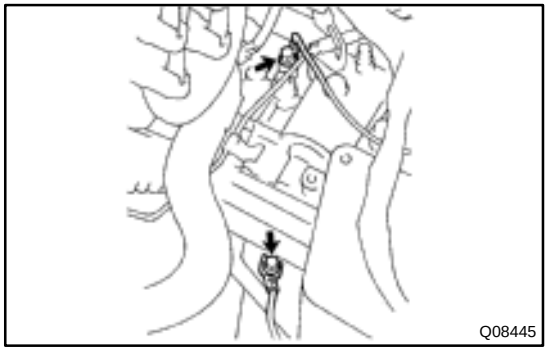

7. DISCONNECT GROUND CABLE

Remove the 2 set bolts of the ground cable.

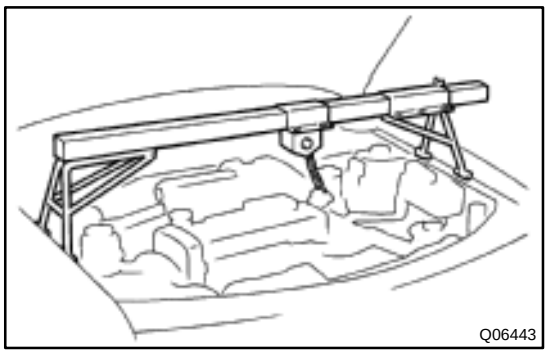
Q06443

8. INSTALL ENGINE SUPPORT FIXTURE

9. REMOVE FRONT WHEEL

Torque: 103 N·m (1,050 kgf·cm, 76 ft·lbf)

10. RAISE VEHICLE

NOTICE:

Make sure that the vehicle is securely supported.

11. REMOVE LH AND RH ENGINE UNDER COVERS

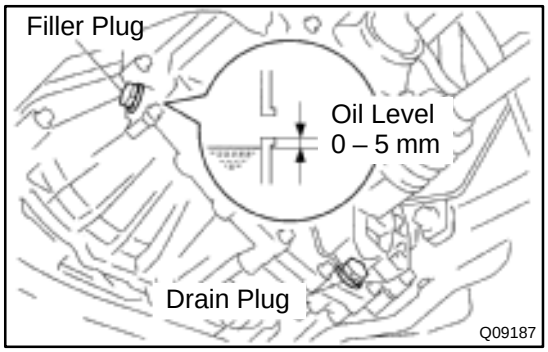

Q09187

12. DRAIN TRANSAXLE OIL

Oil grade: API GL–4 or GL–5

Viscosity: SAE 75W–90

Capacity: 1.9 liters (2.0 US qts, 1.7 Imp. qts)

Torque: 39 N·m (400 kgf·cm, 29 ft·lbf)

13. REMOVE LH AND RH DRIVE SHAFTS

(See page SA–4)

14. REMOVE FRONT EXHAUST PIPE

(a) Disconnect the oxygen sensor connector.

(b) Remove the 2 bolts, springs and gasket from the exhaust manifold.

Torque: 62 N·m (630 kgf·cm, 46 ft·lbf)

(c) Remove the bolt, clamp and gasket.

Torque: 19 N·m (190 kgf·cm, 14 ft·lbf)

(d) Disconnect the pipe from the 2 rings and remove it.

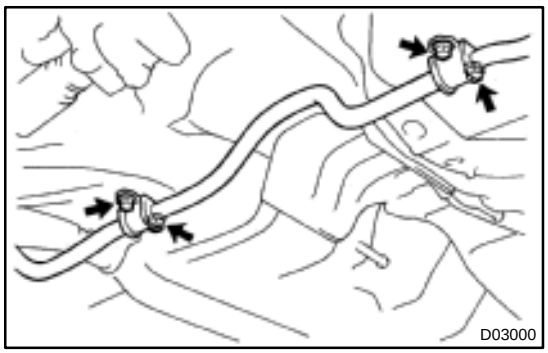
D03000

15. REMOVE ENGINE REAR MOUNTING INSULATOR

(a) Remove the 4 set bolts of the stabilizer bar bracket.

Torque: 19 N·m (195 kgf·cm, 14 ft·lbf)

(b) Disconnect the stabilizer bar from the body.

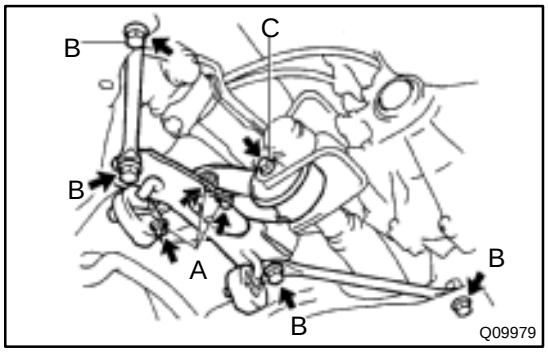

Q09979

(c) Remove the 8 bolts, left and right steering member braces and insulator.

Torque:

Bolt A : 90 N·m (920 kgf·cm, 67 ft·lbf)

Bolt B : 78 N·m (800 kgf·cm, 58 ft·lbf)

Bolt C : 64 N·m (650 kgf·cm, 47 ft·lbf)

16. REMOVE INTAKE MANIFOLD STAY

Remove the bolt, nut and stay.

Torque: 20 N·m (200 kgf·cm, 14 ft·lbf)

17. REMOVE STARTER

Disconnect the connector and wire and remove the starter.

18. DISCONNECT SPEEDOMETER CABLE

19. JACK UP TRANSAXLE SLIGHTLY

Using a transmission jack, support the transaxle.

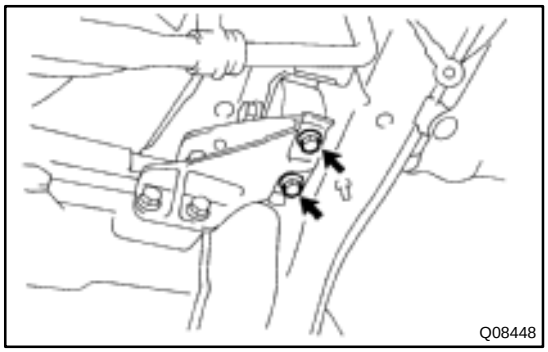

20. DISCONNECT ENGINE LEFT MOUNTING BRACKET FROM ENGINE LEFT MOUNTING INSULATOR

Remove the 2 bolts.

Torque: 48 N·m (490 kgf·cm, 35 ft·lbf)

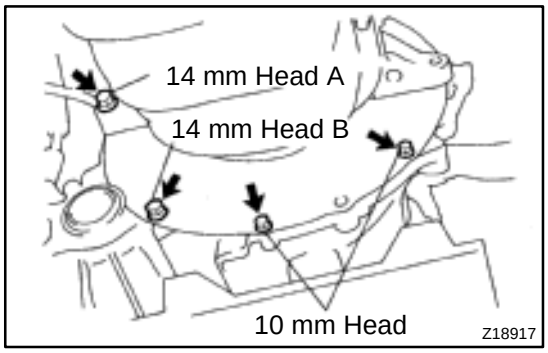

21. REMOVE TRANSAXLE LOWER SIDE MOUNTING BOLT

Remove the 4 bolts.

Torque:
14 mm head A: 46 N·m (470 kgf·cm, 34 ft·lbf)
14 mm head B: 24 N·m (240 kgf·cm, 17 ft·lbf)
10 mm head: 7.4 N·m (75 kgf·cm, 65 in.·lbf)

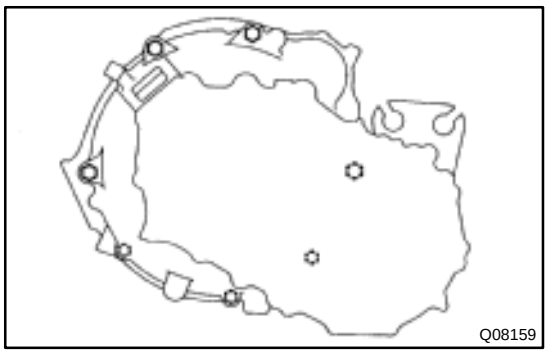

22. REMOVE TRANSAXLE

Lower the engine left side and remove the transaxle from the engine.

HINT:

At the time of installation, please refer to the following item.

Align the input shaft with the clutch disc and install the transaxle to the engine.

OUTPUT SHAFT

MX073–01

COMPONENTS

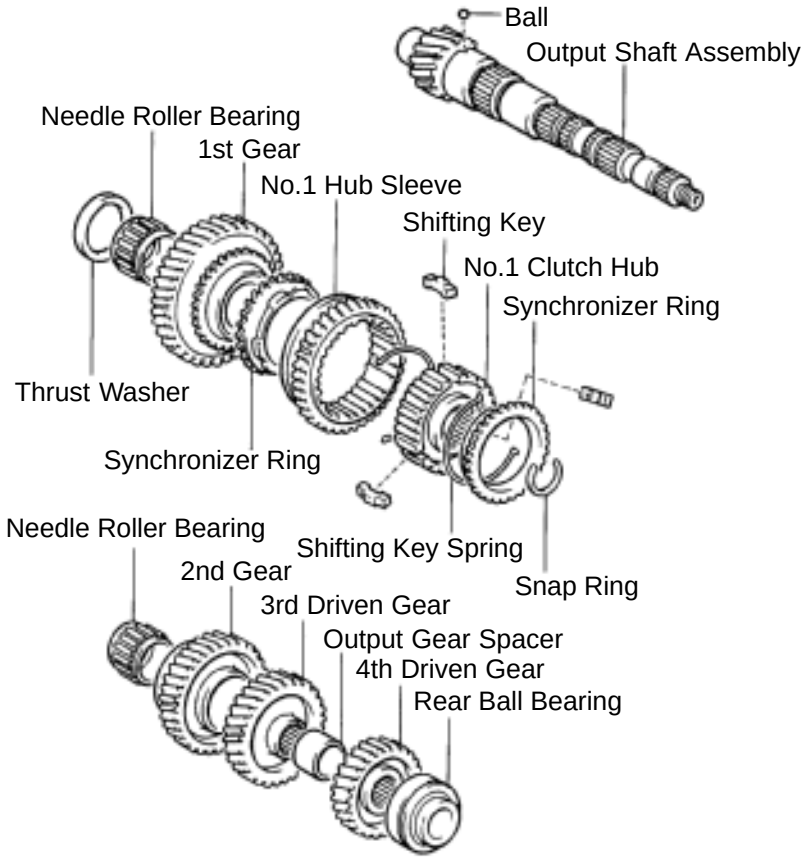

Q06509

MX074–01

DISASSEMBLY

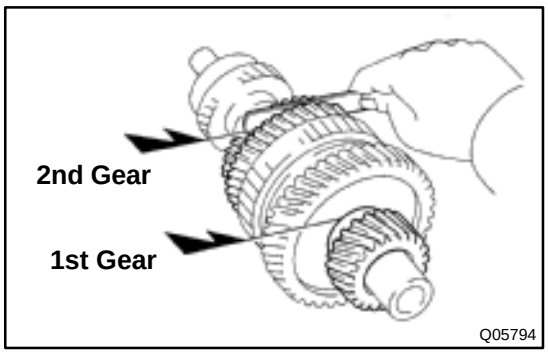

1. INSPECT 1ST AND 2ND GEARS THRUST CLEARANCE

Using a feeler gauge, measure the thrust clearance.

Standard clearance:
1st gear: 0.10–0.40 mm (0.0039–0.0157 in.)
2nd gear: 0.10–0.45 mm (0.0039–0.0177 in.)
Maximum clearance:
1st gear: 0.45 mm (0.0177 in.)
2nd gear: 0.50 mm (0.0197 in.)

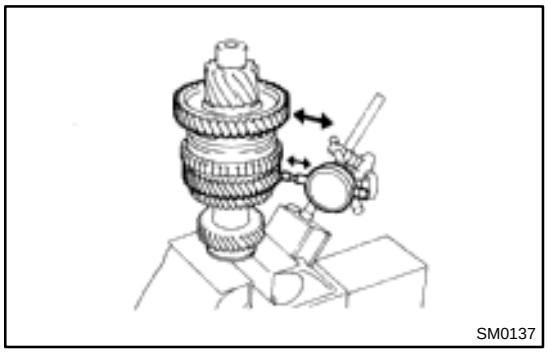

2. INSPECT 1ST AND 2ND GEARS RADIAL CLEARANCE

Using a dial indicator, measure the radial clearance between the gear and shaft.

Standard clearance:
0.015–0.058 mm (0.0006–0.0023 in.)
Maximum clearance:
0.070 mm (0.0028 in.)

If the clearance exceeds the maximum, replace the gear, needle roller bearing or shaft.

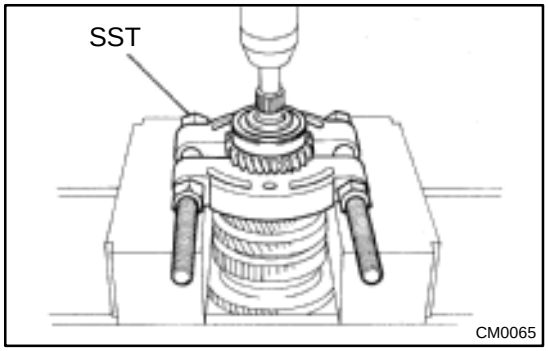

3. REMOVE REAR BALL BEARING, 4TH DRIVEN GEAR AND OUTPUT GEAR SPACER FROM OUTPUT SHAFT

(a) Using SST and a press, remove the rear ball bearing and 4th driven gear.
SST 09950–00020

(b) Remove the output gear spacer.

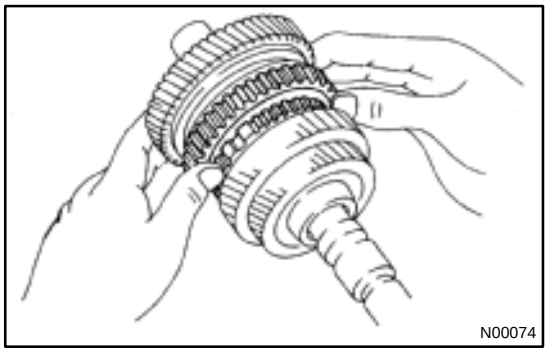

4. REMOVE 3RD DRIVEN GEAR, 2ND GEAR, NEEDLE ROLLER BEARING AND SYNCHRONIZER RING

(a) Shift the No.1 hub sleeve into the 1st gear.

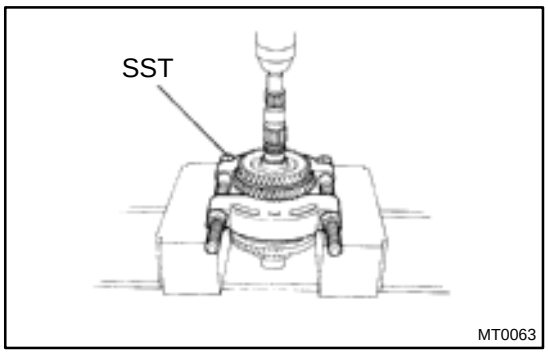

(b) Using SST and a press, remove the 3rd driven gear and 2nd gear.
SST 09950–00020

(c) Remove the needle roller bearing and synchronizer ring.

5. REMOVE SNAP RING

Using 2 screwdrivers and a hammer, tap out the snap ring.

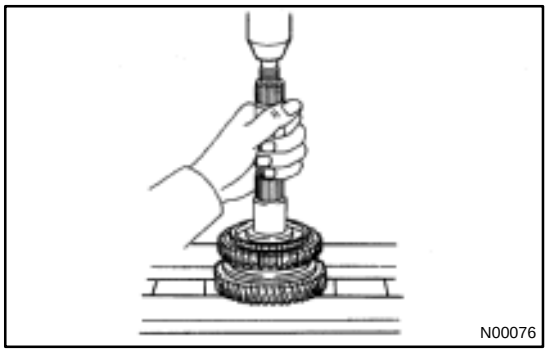

6. REMOVE NO.1 HUB SLEEVE ASSEMBLY, 1ST GEAR, SYNCHRONIZER RING, NEEDLE ROLLER BEARING, THRUST WASHER AND BALL

(a) Using a press, remove the No.1 hub sleeve assembly, 1st gear and synchronizer ring.

(b) Remove the needle roller bearing, thrust washer and ball.

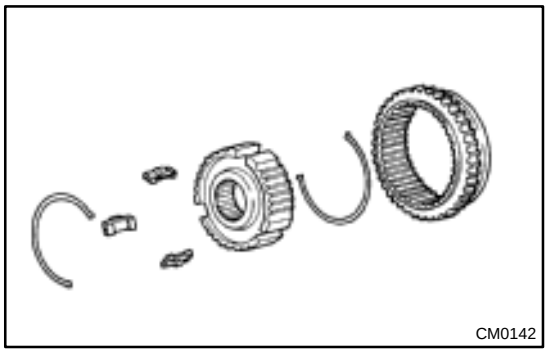

7. REMOVE NO.1 HUB SLEEVE, SHIFTING KEY AND SPRING FROM NO.1 CLUTCH HUB

Using a screwdriver, remove the 3 shifting keys and 2 springs from the No.1 clutch hub.

MX075–02

INSPECTION

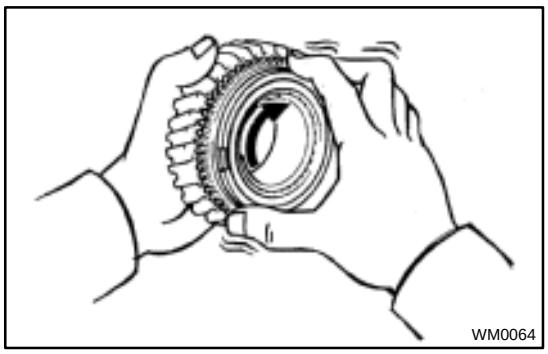
WM0064

1. INSPECT SYNCHRONIZER RING

(a) Check for wear or damage.

(b) Check the braking effect of the synchronizer ring. Turn the synchronizer ring in one direction while pushing it to the gear cone. Check that the ring locks.

If the braking effect is insufficient, apply a small amount of fine lapping compound between the synchronizer ring and gear cone. Lightly rub the synchronizer ring and gear cone together.

NOTICE:

Ensure the fine lapping compound is completely washed off after rubbing.

(c) Check again the braking effect of the synchronizer ring.

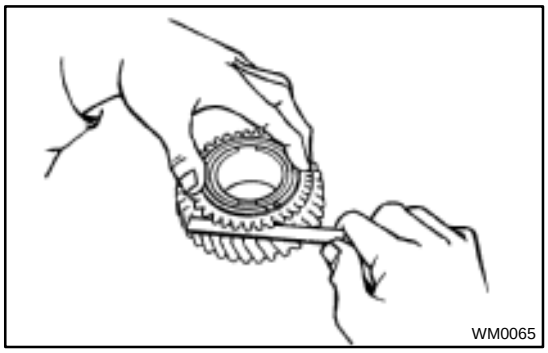
WM0065

(d) Using a feeler gauge, measure the clearance between the synchronizer ring back and gear spline end.

Minimum clearance: 0.6 mm (0.024 in.)

If the clearance is less than the minimum, replace the synchronizer ring and apply a small amount of the fine lapping compound on gear cone.

NOTICE:

Ensure the fine lapping compound is completely washed off after rubbing.

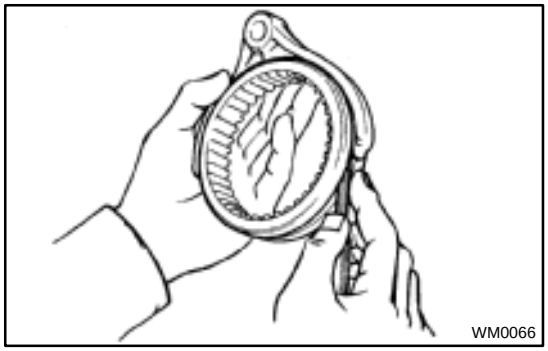
WM0066

2. INSPECT SHIFT FORK AND HUB SLEEVE CLEARANCE

Using a feeler gauge, measure the clearance between the hub sleeve and shift fork.

Maximum clearance: 1.0 mm (0.039 in.)

If the clearance exceeds the maximum, replace the shift fork or hub sleeve.

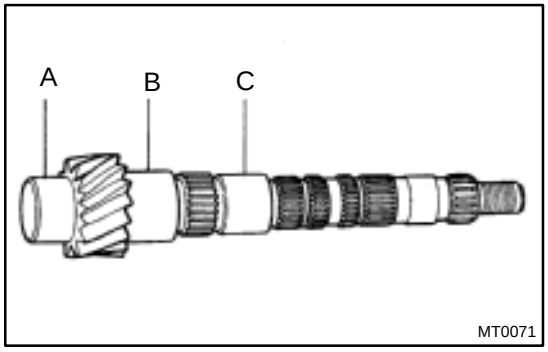

MT0071

3. INSPECT OUTPUT SHAFT

(a) Check the output shaft for wear or damage.

(b) Using a micrometer, measure the outer diameter of the output shaft journal surface.

Minimum outer diameter:

Part A: 32.970 mm (1.2980 in.)

Part B: 37.970 mm (1.4949 in.)

Part C: 31.970 mm (1.2587 in.)

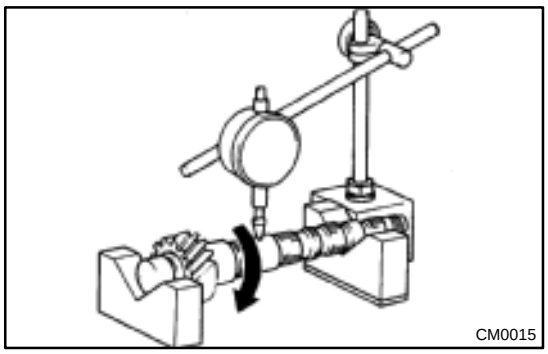

If the outer diameter is less than the minimum, replace the output shaft.

(c) Using a dial indicator, check the shaft runout.
Maximum runout: 0.05 mm (0.0020 in.)

If the runout exceeds the maximum, replace the output shaft.

MX076–01

REASSEMBLY

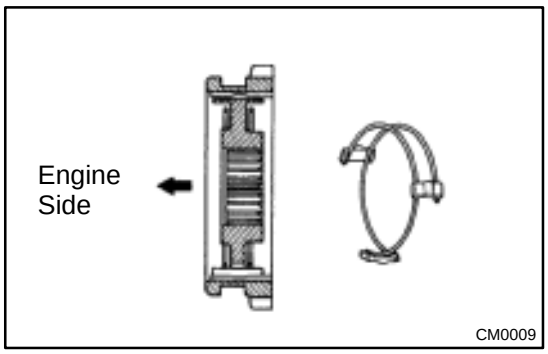

HINT:

Coat all of the sliding and rotating surfaces with gear oil before assembly.

1. INSTALL NO.1 CLUTCH HUB INTO HUB SLEEVE

(a) Install the No.1 clutch hub and shifting keys to the No.1 hub sleeve.

(b) Install the shifting key springs under the shifting keys.

NOTICE:

Position the key springs so that their end gaps are not in line.

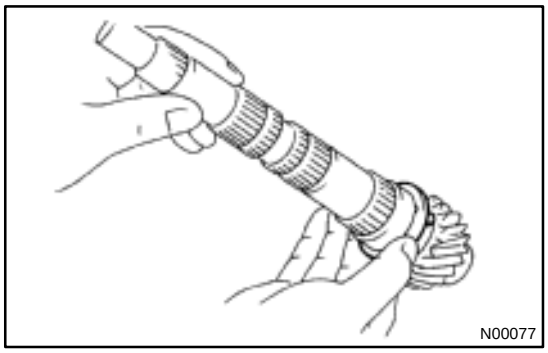

2. INSTALL BALL, THRUST WASHER, 1ST GEAR, NEEDLE ROLLER BEARING, SYNCHRONIZER RING AND NO.1 HUB SLEEVE ASSEMBLY TO OUTPUT SHAFT

(a) Install the ball to the shaft.

(b) Fit the thrust washer groove securely over the locking ball when installing the thrust on the shaft.

(c) Apply gear oil to the needle roller bearing.

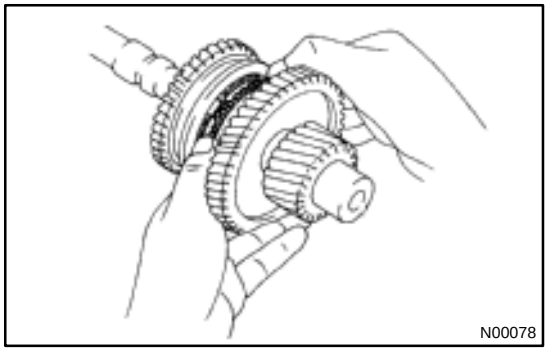

(d) Place the synchronizer ring on the gear and align the ring slots with the shifting keys.

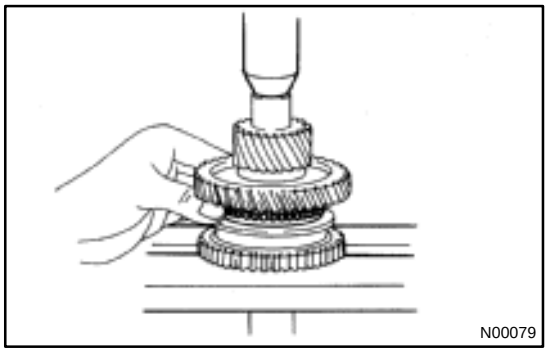

(e) Using a press, install the 1st gear and No.1 hub sleeve.

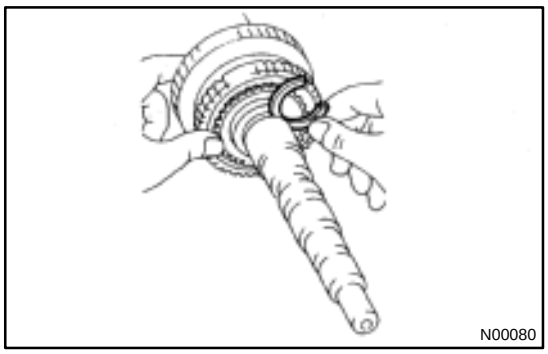
N00080

3. INSTALL SNAP RING

(a) Select a snap ring that allows the minimum axial play.

Mark	Thickness mm (in.)	Mark	Thickness mm (in.)
A	2.50 (0.0984)	D	2.68 (0.1055)
B	2.56 (0.1008)	E	2.74 (0.1079)
C	2.62 (0.1031)	F	2.80 (0.1102)

(b) Using a screwdriver and hammer, tap in the snap ring.

4. INSPECT 1ST GEAR THRUST CLEARANCE
(See page MX–28)

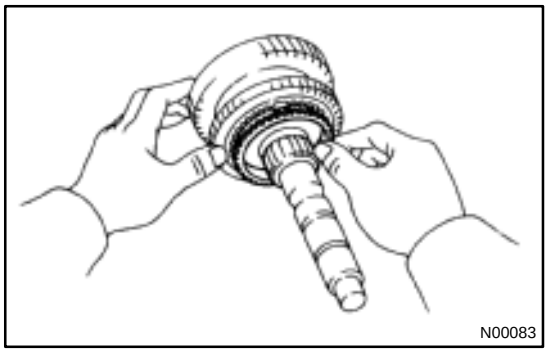
N00083

5. INSTALL SYNCHRONIZER RING, 2ND GEAR, NEEDLE ROLLER BEARING AND 3RD DRIVEN GEAR

(a) Place the synchronizer ring on the gear and align the ring slots with the shifting keys.

(b) Apply gear oil to the needle roller bearing.

(c) Install the 2nd gear.

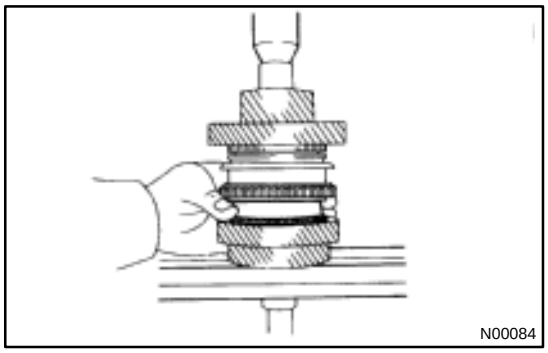
N00084

(d) Using a press, install the 3rd driven gear.

6. INSPECT 2ND GEAR THRUST CLEARANCE
(See page MX–28)

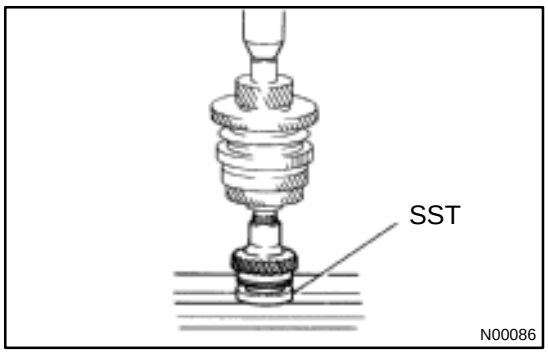

N00086

7. INSTALL OUTPUT GEAR SPACER, 4TH DRIVEN GEAR AND REAR BALL BEARING

(a) Install the output gear spacer.

(b) Using SST and a press, install the 4th driven gear and rear ball bearing.
SST 09608–00071

SHIFT AND SELECT LEVER SHAFT

COMPONENTS

MX077–01

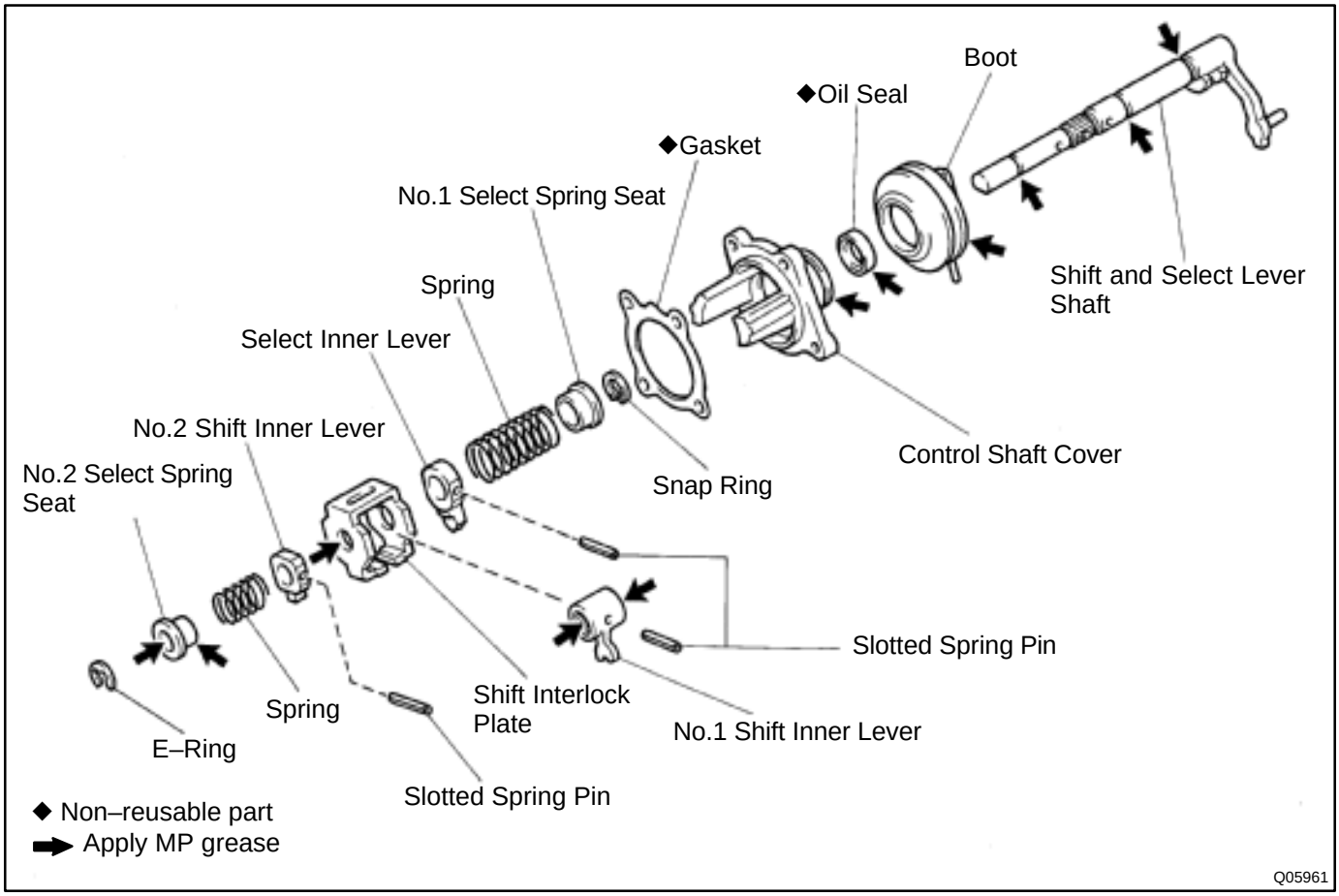

SHIFT LEVER AND CONTROL CABLE

MX07B–01

COMPONENTS

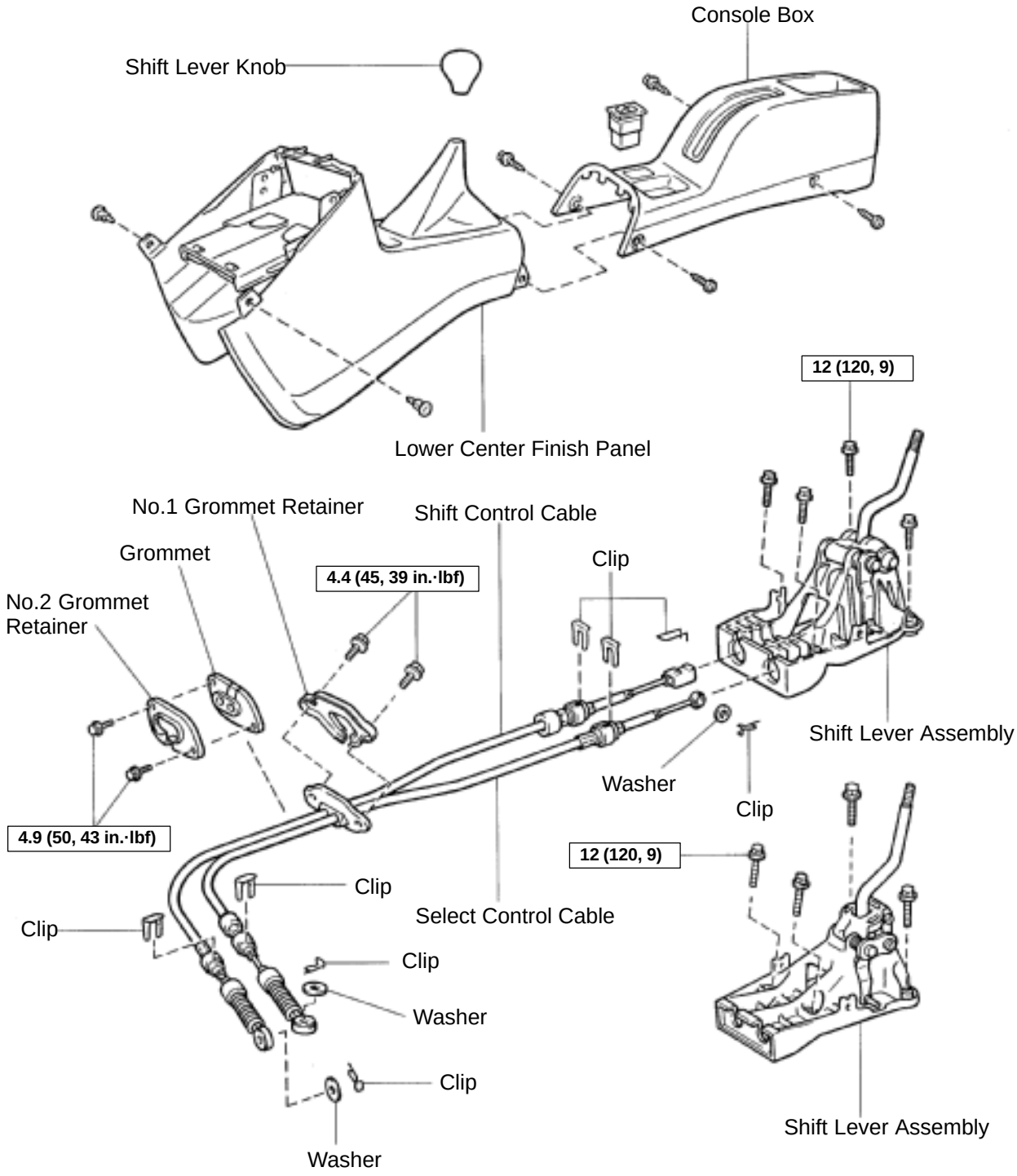

N·m (kgf·cm, ft·lbf) : Specified torque

HINT : There are 2 shapes of shift lever assembly. However, both function in the same way.

Q08442

TROUBLESHOOTING

MX06R–01

PROBLEM SYMPTOMS TABLE

Use the table below to help you find the cause of the problem. The numbers indicate the priority of the likely cause of the problem. Check each part in order. If necessary, replace these parts.

Symptom	Suspect Area	See page
Noise	1. Oil (Level low)	MX–3
	2. Oil (Wrong)	MX–3
	3. Gear (Worn or damaged)	MX–7
	4. Bearing (Worn or damaged)	MX–7
Oil leakage	1. Oil (Level too high)	MX–3
	2. Gasket (Damaged)	MX–7
	3. Oil seal (Worn or damaged)	MX–7
	4. O–Ring (Worn or damaged)	MX–7
Hard to shift or will not shift	1. Control cable (Faulty)	MX–40
	2. Synchronizer ring (Worn or damaged)	MX–20 MX–27
	3. Shift key spring (Damaged)	MX–20 MX–27
Jumps out of gear	1. Locking ball spring (Damaged)	MX–7
	2. Shift fork (Worn)	MX–7
	3. Gear (Worn or damaged)	MX–7
	4. Bearing (Worn or damaged)	MX–7

PP17H–01

EQUIPMENT

Voltmeter	
Ammeter	
Ohmmeter	
Tester lead	
Thermometer	Thermister
Torque Wrench	
Dial indicator	Magnetic clutch

PP17I–01

LUBRICANT

Item	Capacity	Classification
Compressor oil	–	ND–OIL 8 or equivalent
When replacing condenser	40 cc (1.4 fl.oz.)	
When replacing evaporator	40 cc (1.4 fl.oz.)	
When replacing compressor	120 cc (4.1 fl.oz.)	

PP17G–01

RECOMMENDED TOOLS

	09082–00040	TOYOTA Electrical Tester.	
	09216–00021	Belt Tension Gauge .	
	09216–00030	Belt Tension Gauge Cable .	

AIR CONDITIONING

PP17F–01

SST (Special Service Tools)

	07110–58060	Air Conditioner Service Tool Set	
	(07117–58060)	Refrigerant Drain Service Valve	
	(07117–58070)	T–Joint	
	(07117–58080)	Quick Disconnect Adapter	Discharge (diam. 16 mm)
	(07117–58090)	Quick Disconnect Adapter	Suction (diam. 13 mm)
	(07117–78050)	Refrigerant Charging Gauge	
	(07117–88060)	Refrigerant Charging Hose	Discharge (Red)
	(07117–88070)	Refrigerant Charging Hose	Suction (Blue)
	(07117–88080)	Refrigerant Charging Hose	Utility (Green)
	07112–66040	Magnetic Clutch Remover	
	07112–76050	Magnetic Clutch Stopper	
	07114–84020	Snap Ring Pliers	

	07116–38360 Gas Leak Detector Assembly	

PP17L–01

EQUIPMENT

OBD II scan tool	
Straight edge	Check torque converter clutch installation
Dial indicator or dial indicator with magnetic base	Measure inside diameter or piston stroke
Torque wrench	

PP17M–01

LUBRICANT

Item	Capacity	Classification
Automatic transmission fluid Dry fill Drain and refill	 7.2 liters (7.6 US qts, 6.3 Imp. qts) 3.1 liters (3.3 US qts, 2.7 Imp. qts)	 ATF D–II or DEXRON® III (DEXRON® II)

PP17K–01

RECOMMENDED TOOLS

	09082–00040 TOYOTA Electrical Tester.	

PP17N–01

SSM (Special Service Materials)

08833–00070	Adhesive 1324, THREE BOND 1324 or equivalent	Torque converter clutch mounting bolt

AUTOMATIC TRANSAXLE

PP2Q3–01

SST (Special Service Tools)

	09201–10000	Valve Guide Bushing Remover & Replacer Set	
	(09201–01080)	Valve Guide Bushing Remover & Replacer 8	
	09308–00010	Oil Seal Puller	
	09350–30020	TOYOTA Automatic Transmission Tool Set	
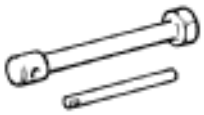	(09351–32010)	One–way Clutch Test Tool	
	(09351–32020)	Stator Stopper	
	09350–32014	TOYOTA Automatic Transmission Tool Set	
	(09351–32130)	Handle	
	(09351–32150)	Oil Seal Replacer	
	09921–00010	Spring Tension Tool	

PP0IG–02

EQUIPMENT

Voltmeter	
Ammeter	
Ohmmeter	
Test lead	
Bulb (3.4W)	Fuel sender gauge, Seat belt warning relay
Bulb (21W)	Turn signal flasher relay
Dry cell battery	Fuel sender gauge
Torque wrench	
Masking tape	Rear window defogger wire
Tin foil	Rear window defogger wire

PP180–01

RECOMMENDED TOOLS

	09082–00040	TOYOTA Electrical Tester.	
	09041–00030	Torx Driver T30 .	For removing and installing steering wheel pad
	09042–00010	Torx Socket T30 .	For removing and installing steering wheel pad

PP181–01

SSM (Special Service Materials)

08888–88888	DuPont Paste No. 4817 or equivalent	Rear window defogger

BODY ELECTRICAL

PP0IE–02

SST (Special Service Tools)

 09843–18020 Diagnosis Check Wire	

PP0AZ–05

EQUIPMENT

Clip remover	
Torque wrench	
Torx driver	
Hog ring pliers	
Hand riveter	
Tape	To avoid surface damage
Adhesive tape	To avoid surface damage
Double–stick tape	
Adhesive	
Cleaner	
Shop rag	
Knife	
Sealer gun	
Brush	
Putty spatula	
Glass plate or similar object	
Wooden block or similar object	
Piano wire	
Rope (no projections, difficult to break)	Seat belt pretensioner
Tire Width: 185 mm (7.28 in.) Inner diam: 360 mm (14.17 in.)	Seat belt pretensioner
Tire with disk wheel Width: 185 mm (7.28 in.) Inner diam: 360 mm (14.17 in.)	Seat belt pretensioner
Vinyl bag	Seat belt pretensioner

PP0B0–02

LUBRICANT

Item	Capacity	Classification
MP grease	–	–

PP0AY–02

RECOMMENDED TOOLS

	09070–20010 Moulding Remover .	

SSM (Special Service Materials)

	08833–00070 Adhesive 1324, THREE BOND 1324 or equivalent	
	08833–00030 Three cement black or equivalent	
	08850–00801 Windshield Glass Adhesive Set or equivalent	

BODY

PP0AX–02

SST (Special Service Tools)

	09082–00700	SRS Airbag Deployment Tool	
	09082–00740	Airbag Deployment Wire Sub–harness No.2	
	09804–24010	Luggage Compartment Door Torsion Bar Tool	
	09812–00010	Door Hinge Set Bolt Wrench	

PP0JN–01

EQUIPMENT

Torque wrench	
Micrometer	Brake disk
Dial indicator	Brake disk
Vernier calipers	Brake drum

PP0JO–01

LUBRICANT

Item	Capacity	Classification
Brake fluid	–	SAEJ1703 or FMVSS No. 116 DOT 3

PP0JM–02

RECOMMENDED TOOLS

	09082–00040 TOYOTA Electrical Tester.	
	09905–00013 Snap Ring Pliers .	

BRAKE

PP2Q4–01

SST (Special Service Tools)

	09023–00100	Union Nut Wrench 10 mm	
	09703–30010	Brake Shoe Return Spring Tool	
	09709–29018	LSPV Gauge Set	
	09718–00010	Shoe Hold Down Spring Driver	
	09737–00010	Brake Booster Push Rod Gauge	
	09751–36011	Brake Line Union Nut 10 x 12 mm Wrench	
	09843–18020	Diagnosis Check Wire	
	09990–00150	ABS Actuator Checker and Sub–harness	
	09990–00163	ABS Actuator Checker Sheet ”A”	
	09990–00200	ABS Actuator Checker Sub–harness ”C”	
	09990–00300	ABS Actuator Checker Sub–harness ”I”	

PP19Q–01

EQUIPMENT

Battery specific gravity gauge	
Belt tension gauge	
Torque wrench	
Vernier calipers	Rotor (Slip ring), Brush

PP19P–01

RECOMMENDED TOOLS

	09082–00040	TOYOTA Electrical Tester.	
	09200–00010	Engine Adjust Kit .	

CHARGING

PP19O–01

SST (Special Service Tools)

	09285–76010	Injection Pump Camshaft Bearing Cone Replacer	Rotor rear bearing cover
	09286–46011	Injection Pump Spline Shaft Puller	Rectifier end frame
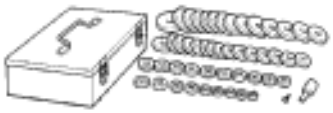	09950–60010	Replacer Set	
	(09951–00460)	Replacer 46	Rotor front bearing
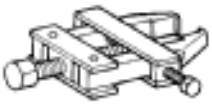	09820–00021	Alternator Rear Bearing Puller	
	09820–00030	Alternator Rear Bearing Replacer	Rotor rear bearing
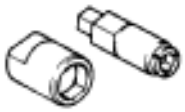	09820–63010	Alternator Pulley Set Nut Wrench Set	

PP155–01

EQUIPMENT

Calipers	
Dial indicator	
Torque wrench	

PP154–01

RECOMMENDED TOOLS

	09031–00030	Pin Punch .	Reservoir tank
	09082–00040	TOYOTA Electrical Tester.	
	09905–00013	Snap Ring Pliers .	

CLUTCH

PP153–01

SST (Special Service Tools)

	09023–00100	Union Nut Wrench 10 mm	Clutch line
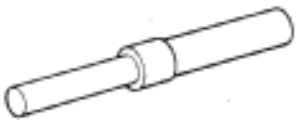	09301–00210	Clutch Guide Tool	
	09333–00013	Clutch Diaphragm Spring Aligner	

PP191–04

COOLANT

Item	Capacity	Classification
Engine Coolant (w/Heater)		
M/T	4.9 liters (5.2 US qts, 4.3 lmp. qts)	Ethylene–glycol base
A/T	5.3 liters (5.6 US qts, 4.7 lmp. qts)	

PP1AB–01

EQUIPMENT

Heater	
Radiator cap tester	
Thermometer	
Torque wrench	
Vernir calipers	

PP1AC–01

RECOMMENDED TOOLS

	09082–00040 TOYOTA Electrical Tester.	
	09258–00030 Hose Plug Set .	

PP1AA–01

SSM (Special Service Materials)

08826–00100	Seal Packing 1282B, THREE BOND 1282B or equivalent (FIPG)	Water pump

COOLING

PP2Q0–01

SST (Special Service Tools)

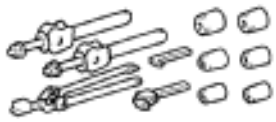	09230–01010 Radiator Service Tool Set	

EMISSION CONTROL

PP1A4–01

EQUIPMENT

Torque wrench	
Vacuum gauge	

PP1A7–01

EQUIPMENT

Caliper gauge	
CO/HC meter	
Compression gauge	
Connecting rod aligner	
Cylinder gauge	
Dial indicator	
Dye penetrant	
Engine tune–up tester	
Heater	
Magnetic finger	
Micromerer	
OBDII scan tool	Idle speed
Piston ring compressor	
Piston ring expander	
Plastigage	
precision straight edge	
Soft brush	
Spring tester	Valve spring
Steel square	Valve spring
Torque wrench	
Valve seat cutter	
Vernier calipers	

PP1A6–01

RECOMMENDED TOOLS

	09040–00010	Hexagon Wrench Set .	Oil filter union
	09043–50080	Bi–hexagon Wrench 8 mm .	Cylinder head bolt
	09090–04020	Engine Sling Device	For suspending engine
	09200–00010	Engine Adjust Kit .	
	09258–00030	Hose Plug Set .	Plug for the vacuum hose, fuel hose etc.
	09904–00010	Expander Set .	Intake camshaft snap ring

PP1A8–01

SSM (Special Service Materials)

08826–00080	Seal Packing Black or equivalent (FIPG)	Camshaft bearing cap (No.1 and No.2) Cylinder head cover Rear oil seal retainer
08826–00100	Seal Packing 1282B, THREE BOND 1282B or equivalent (FIPG)	Water outlet housing
08833–00070	Adhesive 1324, THREE BOND 1324 or equivalent	Spark plug tube Flywheel or drive plate bolt
08833–00080	Adhesive 1344 THREE BOND 1344 LOCTITE 242 or equivalent	Oil pressure switch

ENGINE MECHANICAL

PP1A5–01

SST (Special Service Tools)

	09201–10000	Valve Guide Bushing Remover & Replacer Set	
	(09201–01060)	Valve Guide Bushing Remover & Replacer 6	
	09202–70020	Valve Spring Compressor	
	09213–14010	Crankshaft Pulley Holding Tool	
	09221–25026	Piston Pin Remover & Replacer	
	(09221–00020)	Body	
	(09221–00030)	Spring	
	(09221–00130)	Guide ”G”	
	(09221–00140)	Guide ”H”	
	(09221–00150)	Bushing ”D”	
	09223–15030	Oil Seal & Bearing Replacer	
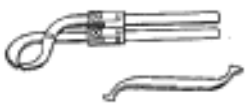	09248–55040	Valve Clearance Adjust Tool Set	

 (09248–05410) Valve Lifter Press		
 (09248–05420) Valve Lifter Stopper		
 09309–37010	Transmission Bearing Replacer	Crankshaft front oil seal
 09330–00021	Companion Flange Holding Tool	Crankshaft pulley
 09550–10012	Replacer Set ”B”	
 (09252–10010)	No. 1 Replacer Handle	Valve guide bushing Spark plug tube gasket crankshaft rear oil seal
 (09556–10010)	Differential Drive Pinion Front Bearing Remover	Spark plug tube gasket
 09816–30010	Oil Pressure Switch Socket	Knock sensor Oil pressure switch
 09843–18020	Diagnosis Check Wire	
 09950–50010	Puller C Set	
 (09951–05010)	Hanger 150	Crankshaft pulley
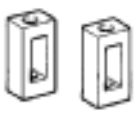 (09952–05010)	Slide Arm	Crankshaft pulley
 (09953–05020)	Center Bolt 150	Crankshaft pulley

	(09954–05020)	Claw No.2	Crankshaft pulley
	09960–10010	Variable Pin Wrench Set	
	(09962–01000)	Variable Pin Wrench Arm Assy	Camshaft timing pulley Camshaft sub–gear
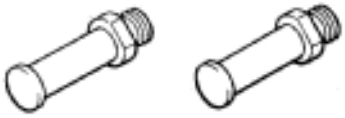	(09963–01000)	Pin 10	Camshaft timing pulley
	(09963–00500)	Pin 5	Camshaft sub–gear

PP19V–01

EQUIPMENT

Spark plug cleaner	

IGNITION

RECOMMENDED TOOLS

PP19U–01

	09082–00040 TOYOTA Electrical Tester.	
	09200–00010 Engine Adjust Kit .	

PP19Y–01

EQUIPMENT

Oil pressure gauge	
Straight edge	Oil pump
Torque wrench	

PP19Z–01

LUBRICANT

Item	Capacity	Classification
Engine oil		API grade SH Energy–Conserving ll or SJ, Energy Conserving or ILSAC multigrade engine oil SAE 5W–30 is the best choice for your vehicle, for good fuel economy, and good starting in cold weather
Drain and refill		
w/o Oil filter change	2.6 liters (2.7 US qts, 2.3 lmp. qts)	
w/ Oil filter change	2.8 liters (3.0 US qts, 2.5 lmp. qts)	
Dry fill	3.7 liters (3.9 US qts, 3.3 lmp. qts)	

PP19X–01

RECOMMENDED TOOLS

	09090–04020	Engine Sling Device	For suspending engine
	09200–00010	Engine Adjust Kit .	
	09905–00013	Snap Ring Pliers .	

PP1A0–01

SSM (Special Service Materials)

08826–00080	Seal Packing Black or equivalent (FIPG)	Oil pump Oil pan
08833–00080	Adhesive 1344 THREE BOND 1344 LOCTITE 242 or equivalent	Oil pressure switch

LUBRICATION

PP19W–01

SST (Special Service Tools)

	09032–00100 Oil Pan Seal Cutter	
	09228–06501 Oil Filter Wrench	

MAINTENANCE

PP1A9–01

EQUIPMENT

Mirror	Brake hose
Torque wrench	

PP150–01

EQUIPMENT

Dial indicator with magnetic base	
Feeler gauge	
Micrometer	
Torque wrench	
Magnetic finger	

PP151–01

LUBRICANT

Item	Capacity	Classification
Manual transaxle oil (w/ Differential oil)	1.9 liters (2.0 US qts, 1.7 Imp. qts)	API GL–4 or GL–5 SAE 75W–90

PP14Z–01

RECOMMENDED TOOLS

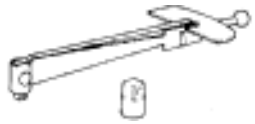	09025–00010	Torque Wrench (30 kgf–cm)	Differential preload
	09031–00030	Pin Punch .	
	09040–00010	Hexagon Wrench Set .	
	09905–00012	Snap Ring No.1 Expander .	

PP152–01

SSM (Special Service Materials)

08826–00090	Seal Packing 1281, THREE BOND 1281 or equivalent (FIPG)	Transmission case x Transaxle case Transmission case x Case cover
08833–00080	Adhesive 1344 THREE BOND 1344 LOCTITE 242 or equivalent	Straight screw plug Control shaft cover bolt

MANUAL TRANSAXLE

SST (Special Service Tools)

PP2Q2–01

	09201–10000	Valve Guide Bushing Remover & Replacer Set	Speedometer driven gear oil seal
	(09201–01080)	Valve Guide Bushing Remover & Replacer 8	
	09308–00010	Oil Seal Puller	Output shaft front bearing
	09309–12020	5th Driven Gear Replacer	
	09350–32014	TOYOTA Automatic Transmission Tool Set	
	(09351–32090)	Oil Seal Remover & Replacer	Differential side bearing
	(09351–32111)	Side Bearing Race Replacer	Differential side bearing oil seal (Transmission case side)
	(09351–32120)	Overdrive Bearing Replacer	Differential side bearing
	(09351–32130)	Handle	
	(09351–32150)	Oil Seal Replacer	Differential side bearing oil seal (Transaxle case side)
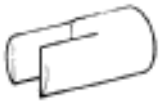	09564–32011	Differential Preload Adaptor	
	09608–00071	Drive Pinion Rear Bearing Cone Replacer	Input shaft rear ball bearing 4th driven gear and rear ball bearing

	09612–22011	Tilt Handle Bearing Replacer	No.3 hub sleeve assembly
	09612–65014	Steering Worm Bearing Puller	Input shaft front bearing and oil seal Differential taper roller bearing outer race
	09921–00010	Spring Tension Tool	Speedometer driven gear oil seal
	09950–00020	Bearing Remover	
	09950–00030	Bearing Remover Attachment	
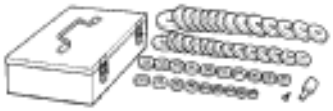	09950–60010	Replacer Set	
	(09951–00360)	Replacer 36	Input shaft front oil seal Differential case side bearing
	(09951–00460)	Replacer 46	Input shaft front bearing
	(09951–00620)	Replacer 62	Output shaft front bearing
	09950–60020	Replacer Set No.2	
	(09951–00680)	Replacer 68	Differential taper roller bearing outer race (Transaxle case side)
	(09951–00710)	Replacer 71	Differential taper roller bearing outer race (Transmission case side)
	09950–70010	Handle Set	

	(09951–07150) Handle 150	

PP0MS–01

EQUIPMENT

Torque wrench	
Bolt: Length: 35 mm (1.38 in.) Pitch: 1.0 mm (0.039 in.) Diam.: 6.0 mm (0.236 in.)	Airbag disposal
Tire Width: 185 mm (7.28 in.) Inner diam.: 360mm (14.17 in.)	Airbag disposal
Tire with disc wheel Width: 185 mm (7.28 in.) Inner diam.: 360 mm (14.17 in.)	Airbag disposal
Vinyl bag	Airbag disposal

PP2Q6–01

RECOMMENDED TOOLS

	09042–00020	Torx Socket T40 .	Airbag sensor assembly
	09082–00040	TOYOTA Electrical Tester.	

SUPPLEMENTAL RESTRAINT SYSTEM

PP2Q5–01

SST (Special Service Tools)

	09082–00700 SRS Airbag Deployment Tool	
	09843–18020 Diagnosis Check Wire	

PP16I–01

EQUIPMENT

Dial indicator	
Torque wrench	
Drill	
Spring tension gauge	

PP16J–03

LUBRICANT

Item	Capacity	Application
Outboard joint grease Color=Black	100 – 110 g (3.5 – 3.9 oz.)	
Inboard joint grease Color=Yellow ocher	140 – 150 g (4.9 – 5.3 oz.)	

PP16H–01

RECOMMENDED TOOLS

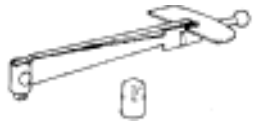	09025–00010	Torque Wrench (30 kgf–cm)	
	09042–00010	Torx Socket T30 .	
	09905–00012	Snap Ring No.1 Expander .	
	09905–00013	Snap Ring Pliers .	

SUSPENSION AND AXLE

PP16G–03

SST (Special Service Tools)

	09223–15020	Oil Seal & Bearing Replacer	Front axle
	09308–00010	Oil Seal Puller	Front axle Rear axle
	09309–36010	Transmission Rear Bearing Replacer	Front drive shaft
	09316–20011	Transfer Bearing Replacer	Front drive shaft
	09520–00031	Rear Axle Shaft Puller	Front axle
	09550–10012	Replacer Set ”B”	Rear axle
	(09552–10010)	No. 2 Replacer Handle–	
	(09553–10010)	Differential Side Bearing Replacer	
	(09557–10010)	Differential Drive Pinion Front Bearing Replacer	
	09608–10010	Steering Knuckle Oil Seal Replacer	Front axle
	09608–16042	Front Hub Bearing Adjusting Tool	Front drive shaft
	(09608–02021)	Bolt & Nut	

	(09608–02041)	Retainer	
	09628–10011	Ball Joint Puller	Front axle
	09628–62011	Ball Joint Puller	Front axle Front suspension
	09631–12040	Oil Seal ”A” Replacer	Front axle
	09727–30021	Coil Spring Compressor	Front suspension Rear suspension
	09751–36011	Brake Line Union Nut 10 x 12 mm Wrench	Rear axle
	09950–00020	Bearing Remover	Front axle Front drive shaft
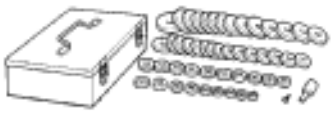	09950–60010	Replacer Set	
	(09951–00460)	Replacer 46	Rear axle
	(09951–00610)	Replacer 61	Front axle
	(09951–00650)	Replacer 65	Front axle
	09950–70010	Handle Set	Front axle Rear axle
	(09951–07150)	Handle 150	

PP1A3–01

EQUIPMENT

Carburetor cleaner	
OBDII scan tool	
Soft brush	Throttle body
Sound scope	Injector
Thermometer	
Torque wrench	
Vacuum gauge	

PP1A2–01

RECOMMENDED TOOLS

	09082–00040	TOYOTA Electrical Tester.	
	09200–00010	Engine Adjust Kit .	
	09258–00030	Hose Plug Set .	Plug for the vacuum hose, fuel hose etc.

SFI

SST (Special Service Tools)

PP1A1–01

	09268–41046	Injection Measuring Tool Set	
	(90405–09015)	No.1 Union	
	09268–45012	EFI Fuel Pressure Gauge	
	09631–22020	Power Steering Hose Nut 14 x 17 mm Wrench Set	Fuel line flare nut
	09816–30010	Oil Pressure Switch Socket	Knock sensor
	09842–30070	Wiring ”F” EFI Inspection	
	09843–18020	Diagnosis Check Wire	

PP18L–01

EQUIPMENT

Belt tension gauge	Drive belt
Caliper gauge	PS vane pump
Calipers	PS vane pump
Cylinder gauge	PS gear
Dial indicator	PS gear
Feeler gauge	PS vane pump
Micrometer	PS vane pump
Torque wrench	

PP18M–01

LUBRICANT

Item		Capacity	Classification
Power steering fluid	Total	0.8 liters (0.9 US qts, 0.7 Imp.qts)	ATF DEXRON® II or III

PP18K–01

RECOMMENDED TOOLS

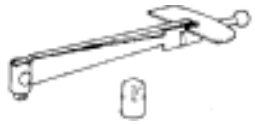	09025–00010	Torque Wrench (30 kgf–cm)	PS vane pump PS gear
	09042–00010	Torx Socket T30 .	Steering column
	09904–00010	Expander Set .	
	(09904–00050)	No. 4 Claw	
	09905–00012	Snap Ring No.1 Expander .	
	09905–00013	Snap Ring Pliers .	

PP18N–01

SSM (Special Service Materials)

08833–00080	Adhesive 1344 THREE BOND 1344 LOCTITE 242 or equivalent	PS gear

STEERING

PP18J–01

SST (Special Service Tools)

	09608–04031	Front Hub Inner Bearing Cone Replacer	PS vane pump
	09612–00012	Rack & Pinion Steering Rack Housing Stand	PS gear
	09612–22011	Tilt Handle Bearing Replacer	Steering column PS gear
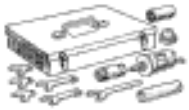	09612–24014	Steering Gear Housing Overhaul Tool Set	
	(09612–10061)	Steering Pinion Bearing Replacer	PS gear
	09612–65014	Steering Worm Bearing Puller	PS gear
	(09612–01030)	Claw ”C”	PS gear
	09613–12010	Power Steering Control Valve Puller	PS gear
	09616–00010	Steering Worm Bearing Adjusting Socket	PS gear
	09631–10030	Oil Seal Remover	PS vane pump
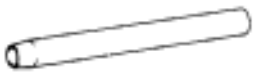	09631–10041	Steering Rack Cover ”D”	PS gear
	09631–12071	Steering Rack Oil Seal Test Tool	PS gear

	09631–20081	Seal Ring Tool	PS gear
	09631–20090	Cylinder End Stopper Nut Wrench	PS gear
	09631–22020	Power Steering Hose Nut 14 x 17 mm Wrench Set	PS gear
	09633–00020	Power Steering Hose Nut Wrench	PS gear
	09640–10010	Power Steering Pressure Gauge Set	
	(09641–01010)	Gauge Assy	Power steering fluid
	(09641–01030)	Attachment B	Power steering fluid
	(09641–01060)	Attachment E	Power steering fluid
	09922–10010	Variable Open Wrench	PS gear
	09950–40011	Puller B Set	
	(09951–04010)	Hanger 150	PS gear
	(09952–04010)	Slide Arm	PS gear
	(09953–04020)	Center Bolt 150	PS gear

	(09954–04010)	Arm 25	PS gear
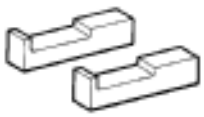	(09955–04050)	Claw No.5	PS gear
	(09957–04010)	Attachment	PS gear
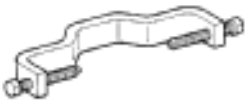	(09958–04010)	Holder	PS gear
	09950–50010	Puller C Set	
	(09951–05010)	Hanger 150	Steering column
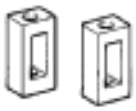	(09952–05010)	Slide Arm	Steering column
	(09953–05020)	Center Bolt 150	Steering column
	(09954–05020)	Claw No.2	Steering column
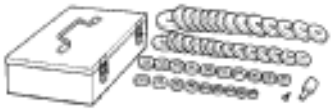	09950–60010	Replacer Set	
	(09951–00200)	Replacer 20	PS gear
	(09951–00230)	Replacer 23	PS gear
	(09951–00240)	Replacer 24	PS gear

	(09951–00330)	Replacer 33	PS vane pump
	(09951–00340)	Replacer 34	PS gear
	(09951–00380)	Replacer 38	PS gear
	(09952–06010)	Adapter	PS gear
	09950–70010	Handle Set	
	(09951–07100)	Handle 100	PS vane pump
	(09951–07150)	Handle 150	PS gear
	(09951–07360)	Handle 360	PS gear
	09960–10010	Variable Pin Wrench Set	
	(09962–01000)	Variable Pin Wrench Arm Assy	PS vane pump
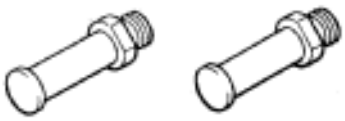	(09963–01000)	Pin 10	PS vane pump

PP19T–01

EQUIPMENT

Caliper gauge	Center bearing for planetary type
Dial indicator	Commutator
Magnetic finger	
Micrometer	Planet carrier shaft for planetary type
Press	Reduction type
Pull scale	Brush spring
Sandpaper	Commutator
Torque wrench	
V–block	
Vernier calipers	Commutator Brush

PP19S–01

RECOMMENDED TOOLS

	09082–00040	TOYOTA Electrical Tester.	
	09904–00010	Expander Set .	Planetary type

STARTING

PP2Q1–01

SST (Special Service Tools)

	09221–25026	Piston Pin Remover & Replacer	
	(09221–00071)	Guide ”A”	Center bearing for planetary type
	(09221–00090)	Guide ”C”	Center bearing for planetary type
	09286–46011	Injection Pump Spline Shaft Puller	Armature bearing for reduction type
	09820–00030	Alternator Rear Bearing Replacer	Armature rear bearing for reduction type
	09810–38140	Starter Magnet Switch Nut Wrench 14	Terminal nut

AIRBAG SENSOR ASSEMBLY

COMPONENTS

RS039–09

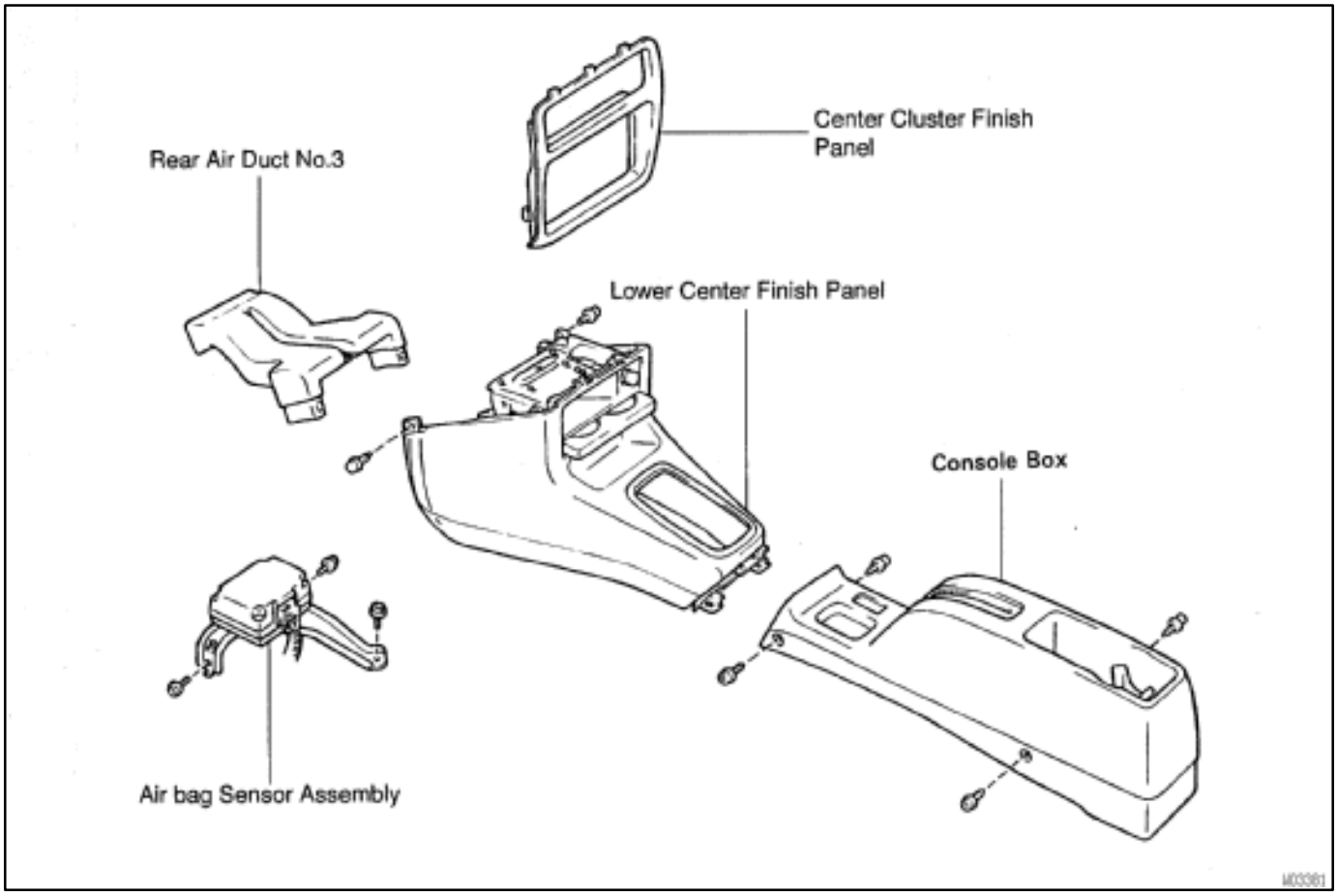

RS0OE–01

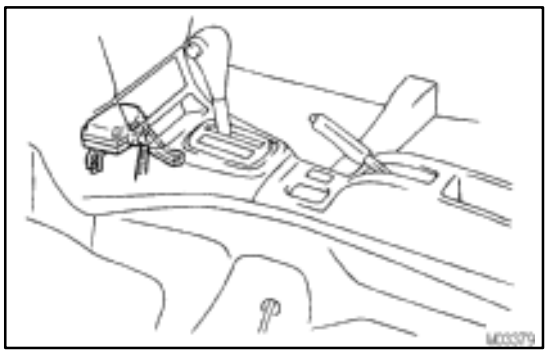

INSPECTION

1. VEHICLES NOT INVOLVED IN COLLISION

Do a diagnostic system check (See page DI–211).

2. VEHICLES INVOLVED IN COLLISION AND SRS IS NOT DEPLOYED

Do a diagnostic system check (See page DI–211).

3. VEHICLES INVOLVED IN COLLISION AND SRS IS DEPLOYED

Replace the airbag sensor assembly (See page RS–33).

RS03C–10

INSTALLATION

NOTICE:

- **Never use SRS parts from another vehicle. When replacing parts, replace with new parts.**
- **Never reuse the airbag sensor assembly involved in a collision when the airbag has deployed.**
- **Never repair a sensor in order to reuse it.**

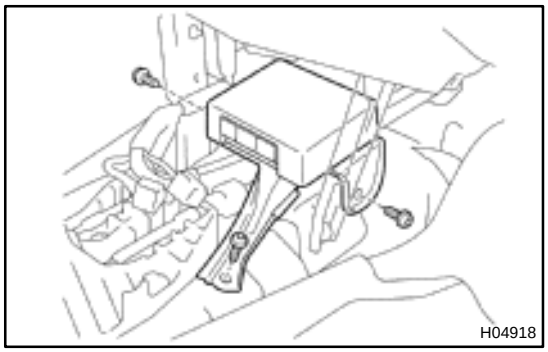

1. INSTALL AIRBAG SENSOR ASSEMBLY

(a) Using a torx wrench, install the airbag sensor assembly with the 3 screws.
Torx wrench: T40 (Part No. 09042–00020 or locally manufactured tool)
Torque: 20 N·m (205 kgf·cm, 15 ft·lbf)

(b) Connect the connector.

NOTICE:

- **Installation of the connector is done after the sensor assembly has been installed.**
- **Make sure the sensor assembly is installed to the specified torque.**
- **If the sensor assembly has been dropped, or there are cracks, dents or other defects in the case, bracket or connector, replace the sensor assembly with a new one.**
- **When installing the airbag sensor assembly, take care that the SRS wiring does not interfere with other parts and is not pinched between other parts.**
- **After installation, shake the sensor assembly to check that there is no looseness.**

2. INSTALL THESE PARTS:
(See page BO–51)

- Console box
- Center cluster finish panel
- Lower center finish panel
- Rear air duct No. 3

RS03A–10

REMOVAL

NOTICE:

- **Do not open the cover or the case of the ECU and various computers unless absolutely necessary.**
  (If the IC terminals are touched, the IC may be destroyed by static electricity.)
- **Never use SRS parts from another vehicle. When replacing parts, replace with new ones.**
- **Never reuse the airbag sensor assembly involved in a collision when the airbag has deployed.**
- **Never repair a sensor in order to reuse it.**

1. REMOVE THESE PARTS
(See page BO–51)

- Console box
- Center cluster finish panel
- Lower center finish panel
- Rear air duct No. 3

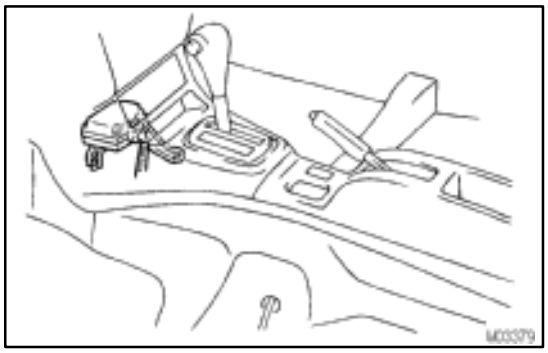

2. REMOVE AIRBAG SENSOR ASSEMBLY

(a) Disconnect the connectors.

NOTICE:

Remove the connector with the sensor assembly installed.

(b) Using a torx wrench remove the 3 screws and the airbag sensor assembly.
Torx wrench: T40 (Part No. 09042–00020 or locally manufactured tool)

RS01J–08

REPLACEMENT

REPLACEMENT REQUIREMENTS

In the following cases, replace the airbag sensor assembly.

- If the SRS has been deployed in a collision.
- If the airbag sensor assembly has been found to be faulty in troubleshooting.
- If the airbag sensor assembly has been dropped.

CAUTION:

For removal and installation of the airbag sensor assembly, see page RS–34 and RS–37. Be sure to follow the correct procedure.

FRONT PASSENGER AIRBAG ASSEMBLY

RS033–09

COMPONENTS

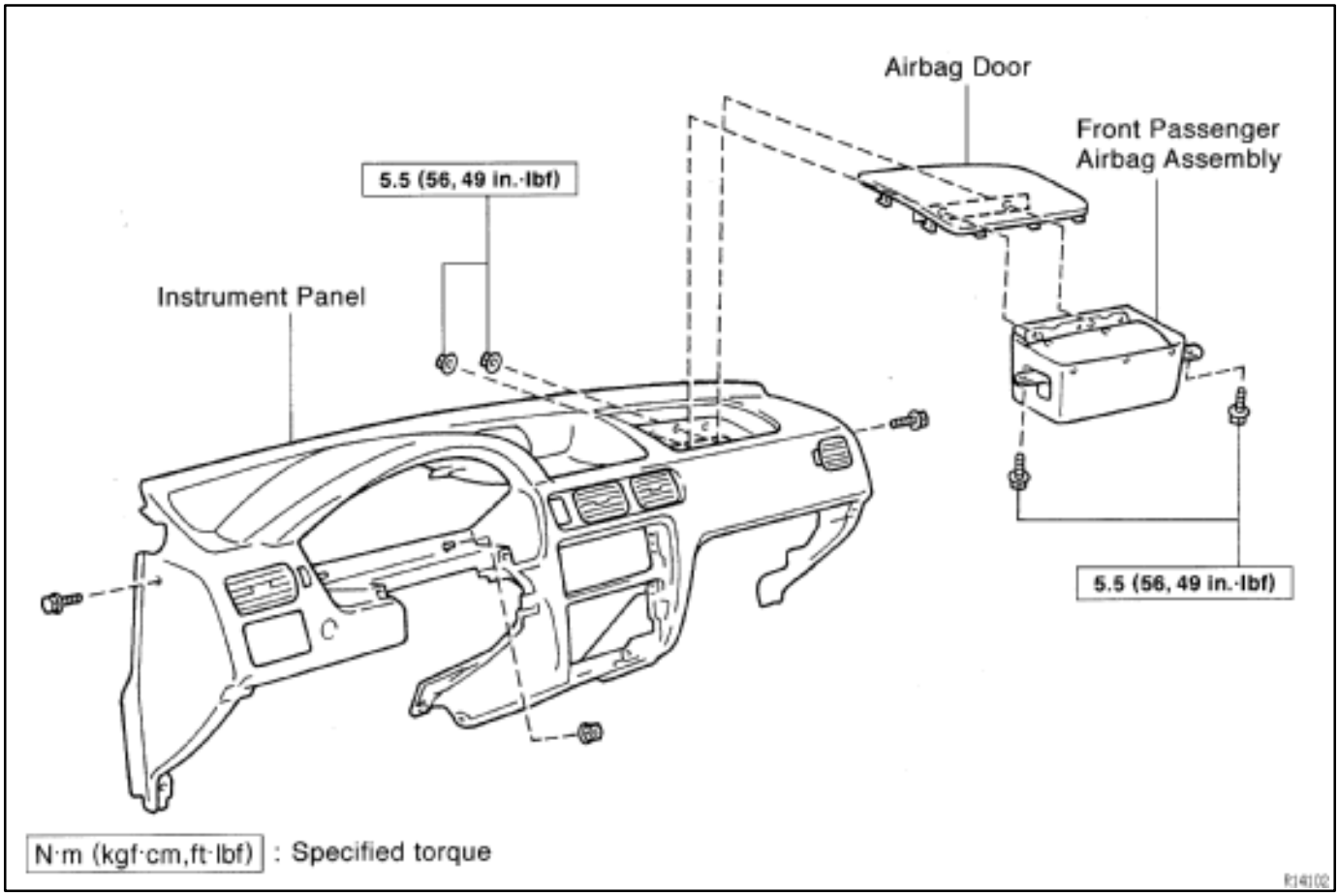

RS036–09

DISPOSAL

HINT:

When an scrapping vehicle equipped with an SRS or disposing of a front passenger airbag assembly, always first deploy the airbag in accordance with the procedure described below. If any abnormality occurs with the airbag deployment, contact the SERVICE DEPT. of TOYOTA MOTOR SALES, U.S.A., INC.

When disposing of a front passenger airbag assembly with an airbag deployed in a collision, follow the same procedure given in step 1–(e) in ”DISPOSAL”.



CAUTION:

- **Never dispose of a front passenger airbag assembly which has an undeployed airbag.**
- **The airbag produces a sizeable exploding sound when it deploys, so perform the operation out–of–doors and where it will not create a nuisance to nearby residents.**
- **When deploying the airbag, always use the specified SST (SRS Airbag Deployment Tool). Perform the operation in a place away from electrical noise.**
  SST 09082–00700
- **When deploying an airbag, perform the operation at least 10 m (33 ft) away from the front passenger airbag assembly.**
- **The front passenger airbag assembly is very hot when the airbag is deployed, so leave it alone for at least 30 minutes after deployment.**
- **Use gloves and safety glasses when handling a front passenger airbag assembly with deployed airbag.**
- **Always wash your hands with water after completing the operation.**
- **Do not apply water, etc. to a front passenger airbag assembly with deployed airbag.**

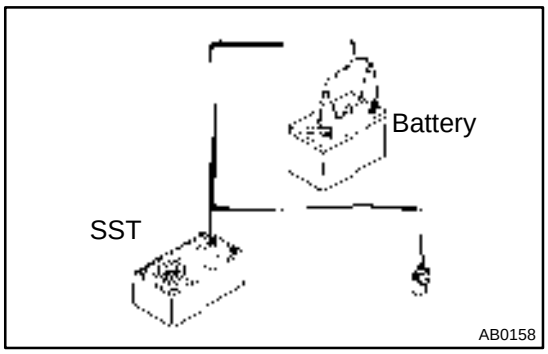

1. AIRBAG DEPLOYMENT WHEN SCRAPPING VEHICLE

HINT:
Have a battery ready as the power source to deploy the airbag.



(a) Check functioning of the SST (See page RS–11).
SST 09082–00700

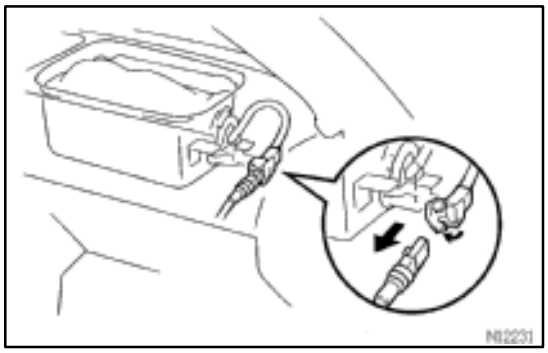

(b) Disconnect the airbag connector.
(1) Remove the lower finish panel (See page BO–51).
(2) Remove the RH flont door scuff plate cowl side trim.
(3) Disconnect the airbag connector.

NOTICE:
When handling the airbag connector, take care not to damage the airbag wire harness.

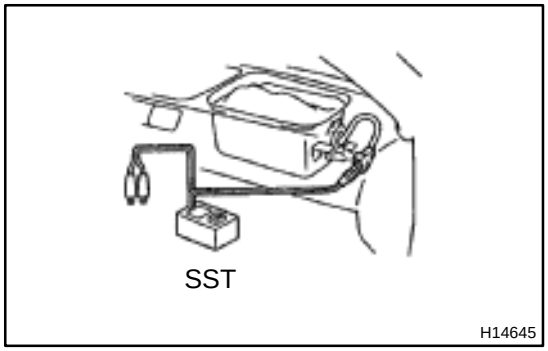

(c) Install the SST.
(1) Connect the SST connector to the front passenger airbag assembly connector.
SST 09082–00700

NOTICE:
To avoid damaging the SST connector and wire harness, do not lock the secondary lock of the twin lock.

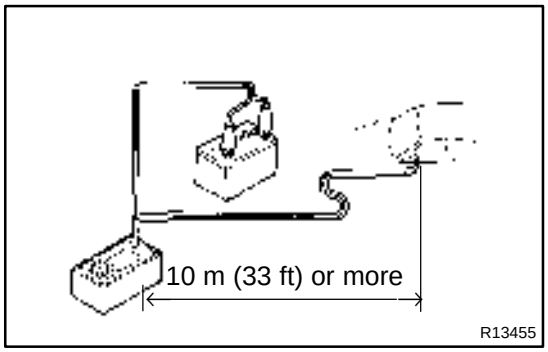

(2) Move the SST to at least 10 m (33 ft) away from the front of the vehicle.
(3) Close all the doors and windows of the vehicle.

NOTICE:
Take care not to damage the SST wire harness.

(4) Connect the SST red clip to the battery positive (+) terminal and the black clip to the negative (–) terminal.

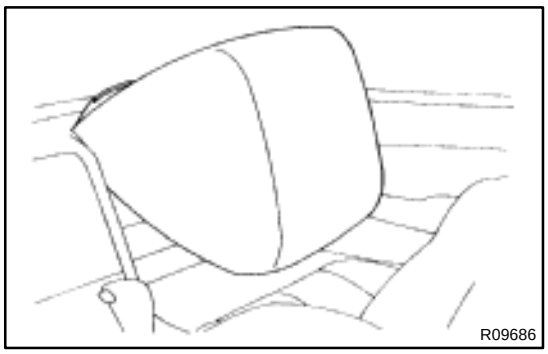

(d) Deploy the airbag.
(1) Check that no one is inside the vehicle or within 10 m (33 ft) area around the vehicle.
(2) Press the SST activation switch and deploy the airbag.

HINT:
The airbag deploys simultaneously as the LED of the SST activation switch lights up.

(e) Dispose of the front passenger airbag assembly.

CAUTION:
- **The front passenger airbag assembly is very hot when the airbag is deployed, so leave it alone for at least 30 minutes after deployment.**
- **Use gloves and safety glasses when handling a front passenger airbag assembly with deployed airbag.**
- **Always wash your hands with water after completing the operation.**
- **Do not apply water, etc. to a front passenger airbag assembly with deployed airbag.**
  (1) When scrapping a vehicle, deploy the airbag and scrap the vehicle with the front passenger airbag assembly still installed.
  (2) When moving a vehicle for scrapping which has a front passenger airbag assembly with deployed airbag, use gloves and safety glasses.

2. DEPLOYMENT WHEN DISPOSING OF FRONT PASSENGER AIRBAG ASSEMBLY ONLY

NOTICE:
- **When disposing of the front passenger airbag assembly only, never use the customers vehicle to deploy the airbag.**
- **Be sure to follow the procedure given below when deploying the airbag.**

HINT:
Have a battery ready as the power source to deploy the airbag.

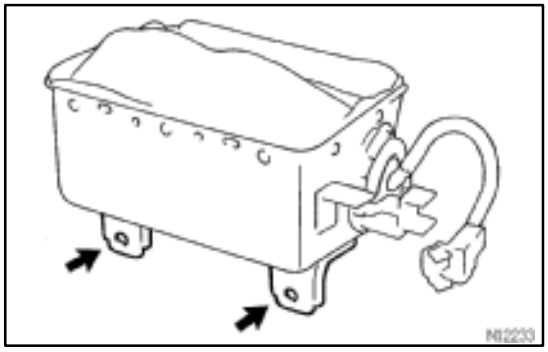

(a) Remove the front passenger airbag assembly (See page RS–22).

CAUTION:
- **When removing the front passenger airbag assembly, work must be started 90 seconds after the ignition switch is turned to the "LOCK" position and the negative (–) terminal cable is disconnected from the battery.**
- **Store the front passenger airbag assembly with the airbag deployment side facing upward.**

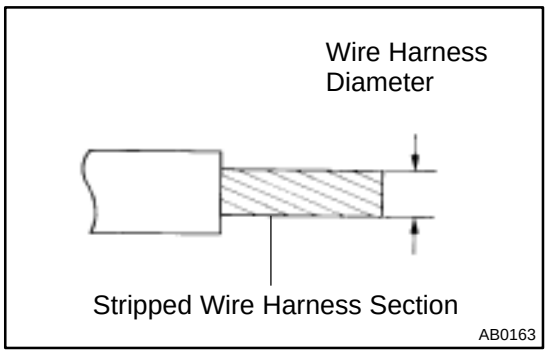

(b) Using a service–purpose wire harness for the vehicle, tie down the front passenger airbag assembly to the tire.
Wire harness: Stripped wire harness section 1.25 mm^2 or more (0.0019 in.^{2} or more)

CAUTION:
If the front passenger airbag assembly is tied down with too thin wire harness, it may snap. This is highly dangerous. Always use a wire harness for vehicle use which is at least 1.25 mm^2 (0.0019 in.^{2}).

HINT:
To calculate the square of the stripped wire harness section:
Square = 3.14 X (Diameter)^2 divided by 4

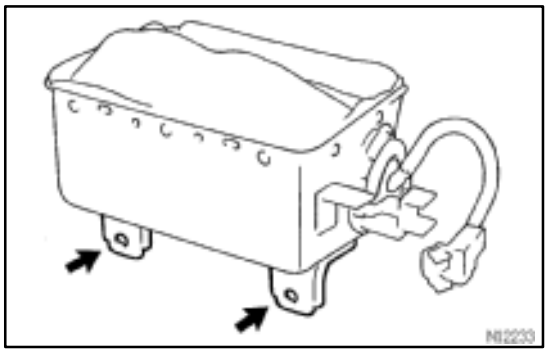

(1) Wind the wire harness around the tire, passing the wire harness through the installation holes indicated by arrows in the installation.

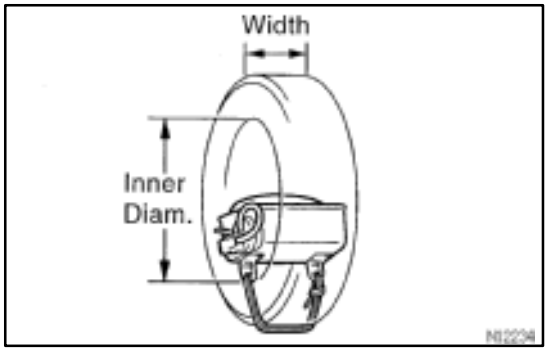

(2) Position the front passenger airbag assembly inside the tire with the airbag deployment side facing inside.
Tire size: Must exceed the following dimensions–
Width: 185 mm (7.28 in.)
Inner diameter: 360 mm (14.17 in.)

CAUTION:
- **Make sure that the wire harness is tight. It is very dangerous if looseness in the wire harness results in the front passenger airbag assembly coming free due to the shock of the airbag deploying.**
- **Always tie down the front passenger airbag assembly with the airbag door facing inside.**

NOTICE:
The tire will be marked by the airbag deployment, so when disposing of the airbag use a redundant tire.

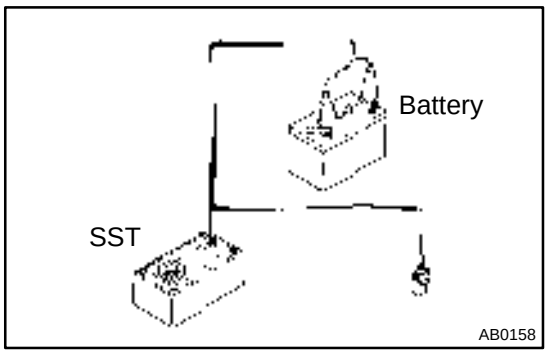

(c) Check functioning of the SST.
SST 09082–00700

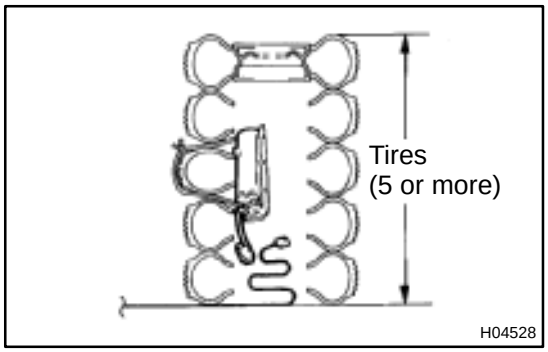

(d) Place tires.
(1) Place at least 2 tires under the tire to which the front passenger airbag assembly is tied.
(2) Place at least 2 tires over the tire to which the front passenger airbag assembly is tied. The top tire should have the wheel installed.
(3) Tie the tires together with 2 wire harnesses.

CAUTION:
Make sure that the wire harnesses are tight. It is very dangerous if loose wire harnesses result in the tires coming free due to the shock of the airbag deploying.

HINT:
Place the SST connector and wire harness inside tires. Provide at least 1 m (3 ft) of slack for the wire harness.

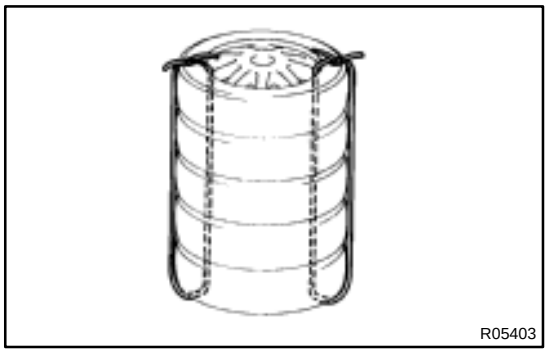

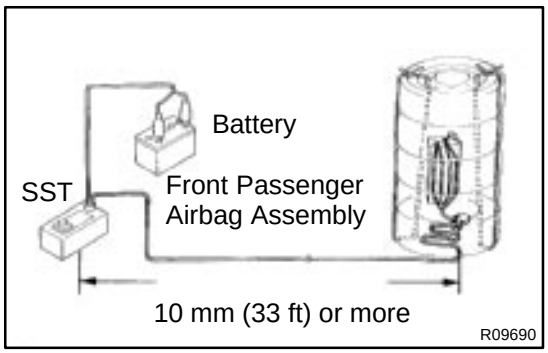

(e) Install the SST.
Connect the SST connector to the front passenger airbag assembly connector.
SST 09082–00700

NOTICE:
To avoid damaging the SST connector and wire harness, do not lock the secondary lock of the twin lock.

(f) Deploy the airbag.
(1) Connect the SST red clip to the battery positive (+) terminal and the black clip to the battery negative (–) terminal.
(2) Confirm that no one is within 10 m (33 ft) area around the tire which the front passenger airbag assembly is tied to.
(3) Press the SST activation switch and deploy the airbag.

HINT:
The airbag deploys simultaneously as the LED of the SST activation switch lights up.



(g) Dispose of the front passenger airbag assembly.

CAUTION:

- **The front passenger airbag assembly is very hot when the airbag is deployed, so leave it alone for at least 30 minutes after deployment.**
- **Use gloves and safety glasses when handling a front passenger airbag assembly with deployed airbag.**
- **Always wash your hands with water after completing the operation.**
- **Do not apply water, etc. to a front passenger airbag assembly with deployed airbag.**

(1) Remove the front passenger airbag assembly from the tire.

(2) Place the front passenger airbag assembly in a vinyl bag, tie the end tightly and dispose of it in the same way as other general parts.

RS035–09

INSPECTION

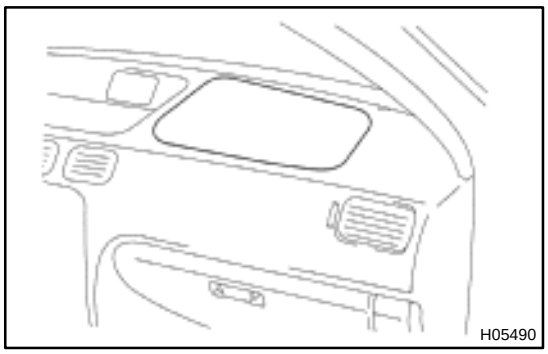

1. VEHICLE NOT INVOLVED IN COLLISION

(a) Do a diagnostic system check (See page DI–211).

(b) Do a visual check which includes the following items with the front passenger airbag assembly installed in the vehicle.

Check for cuts, minute cracks in or marked discoloration of the front passenger airbag door.

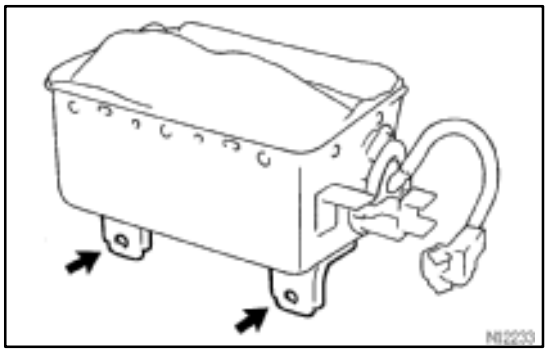

2. VEHICLE INVOLVED IN COLLISION AND AIRBAG IS NOT DEPLOYED

(a) Do a diagnostic system check (See page DI–211).

(b) Do a visual check which includes the following items with the front passenger airbag assembly removed from the vehicle.

- Check for cuts and cracks in, or marked discoloration of the front passenger airbag door.
- Check for cuts and cracks in wire harnesses, and for chipping in connectors.
- Check for deformation of the instrument panel and instrument panel reinforcement.

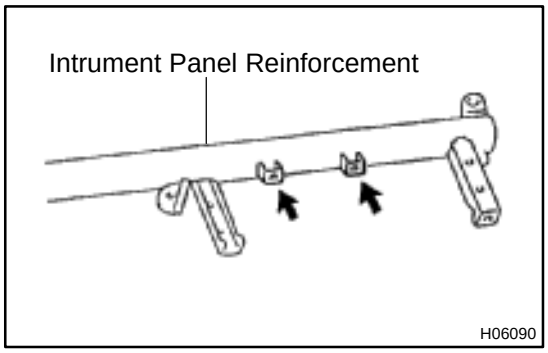

HINT:

If the instrument panel or instrument panel reinforcement is deformed, never repair it. Always replace it with a new one.

CAUTION:

For removal and installation of the front passenger airbag assembly, see page RS–22 and RS–32, and be sure to follow the correct procedure.

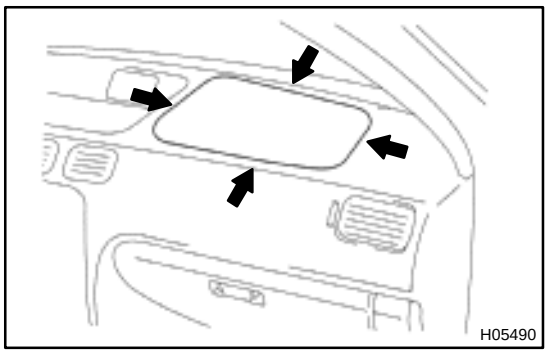

3. VEHICLE INVOLVED IN COLLISION AND AIRBAG IS DEPLOYED

(a) Do a diagnostic system check (See page DI–211).

(b) Do a visual check which includes the following items with the airbag assembly removed from the vehicle.

- Check for deformation of the instrument panel, instrument panel reinforcement and glove compartment door.
- Check for damage to the connector and wire harness.

HINT:

If the instrument panel or instrument panel reinforcement is deformed, never repair it. Always replace it with a new one.

RS0B0–05

INSTALLATION

NOTICE:

Never use airbag parts from another vehicle. When replacing parts, replace them with new parts.

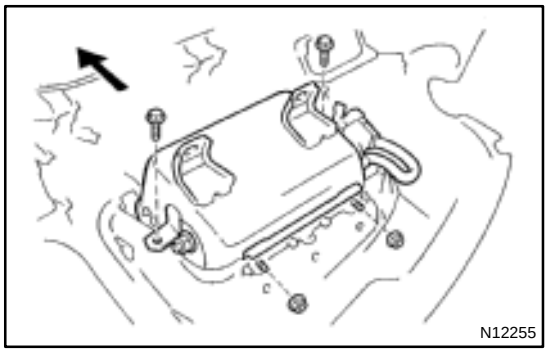

1. INSTALL FRONT PASSENGER AIRBAG ASSEMBLY

(a) Install the airbag door.

(b) Install the front passenger airbag assembly, with 2 bolts and nuts to the instrument panel.

Torque: 5.5 N·m (56 kgf·cm, 49 in.·lbf)

NOTICE:

- **Make sure that the front passenger airbag assembly is installed to the specified torque.**
- **If the front passenger airbag assembly has been dropped, or there are cracks, dents or other defects in the case or connector, replace the front passenger airbag assembly with a new one.**
- **When installing the front passenger airbag assembly, take care that the wiring does not interfere with other parts and is not pinched between other parts.**

2. INSTALL INSTRUMENT PANEL

(See page BO–51)

Install the 2 bolts to instrument panel reinforcement.

Torque: 19 N·m (195 kgf·cm, 14 ft·lbf)

NOTICE:

- **When installing the instrument panel, take care that the airbag wire harness does not interfere with other parts and is not pinched between other parts.**
- **When installing the instrument panel box, carefully pull out the airbag wire harness from the glove compartment upper hole.**

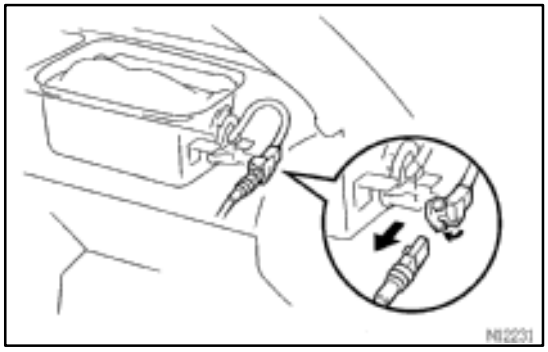

3. CONNECT AIRBAG CONNECTOR

(a) Connect the airbag connector.

(b) Install the lower finish panel (See page BO–51).

(c) Connect the airbag connector.

(d) Put the connector on the glove compartment door finish plate.

(e) Install the glove compartment door finish plate to the glove compartment box.

RS0AZ–05

REMOVAL

NOTICE:

- **If the wiring connector of the SRS is disconnected with the ignition switch at ON or ACC, diagnostic trouble codes will be recorded.**
- **Never use airbag parts from another vehicle. When replacing parts, replace will new parts.**

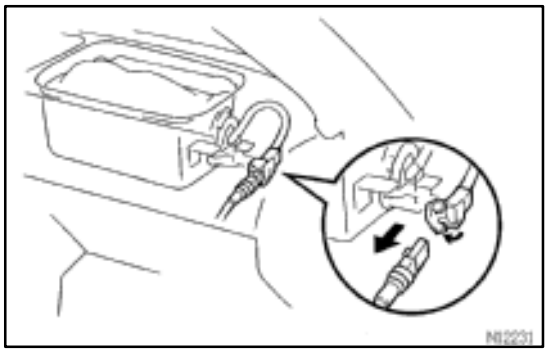

1. DISCONNECT AIRBAG CONNECTOR

(a) Remove the lower finish panel (See page BO–51).

(b) Disconnect the airbag connector.

(c) Remove the 2 bolts from the instrument panel reinforcement.

NOTICE:

When handling the airbag connector, take care not to damage the airbag wire harness.

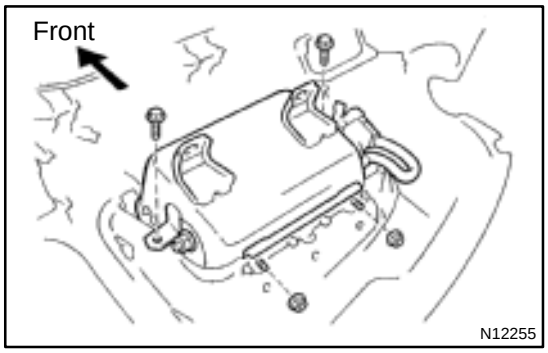

2. REMOVE INSTRUMENT PANEL(See page BO–51)

3. REMOVE FRONT PASSENGER AIRBAG ASSEMBLY

(a) Remove the 2 bolts, 2 nuts and front passenger airbag assembly.

(b) Remove the airbag door.

CAUTION:

- **Do not store the front passenger airbag assembly with the airbag deployment side facing down**
- **Never disassemble the front passenger airbag assembly.**

RS037–03

REPLACEMENT

REPLACEMENT REQUIREMENTS

In the following cases, replace the front passenger airbag assembly, instrument panel, instrument panel reinforcement and glove compartment door.

Case	Replacing part
If the airbag has been deployed.	Front passenger airbag assembly
If the front passenger airbag assembly has been found to be faulty in trouble-shooting.	Front passenger airbag assembly
If the front passenger airbag assembly has been found to be faulty during checking items (See page RS–23).	Front passenger airbag assembly
If the instrument panel has been found to be faulty during checking items (See page RS–23).	Instrument panel
If the instrument panel reinforcement has been found to be faulty during checking items (See page RS–23).	Instrument panel reinforcement
If the front passenger airbag assembly has been dropped.	Front passenger airbag assembly

CAUTION:

For removal and installation of the front passenger airbag assembly, see page RS–22 and RS–32, and be sure to follow the correct procedure.

RS0OC–01

OPERATION

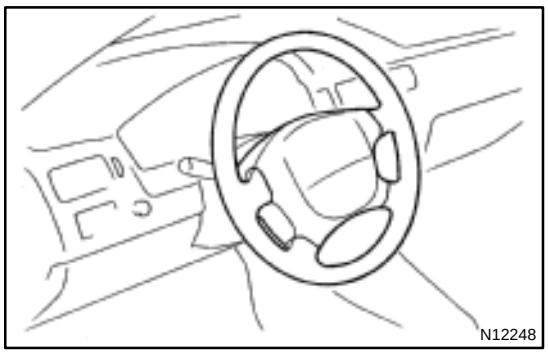

1. STEERING WHEEL PAD (with AIRBAG)

The inflater and bag of the SRS are stored in the steering wheel pad and cannot be disassembled. The inflater contains a squib, igniter charge, gas generant, etc., and inflates the bag when instructed by the airbag sensor assembly.

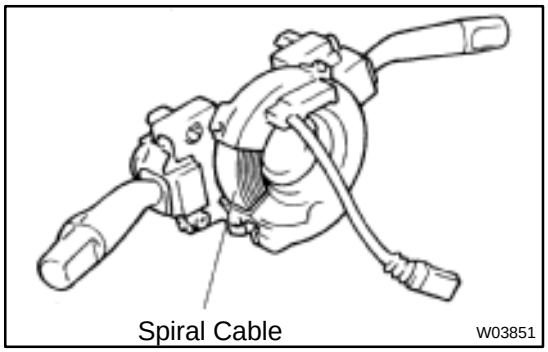

2. SPIRAL CABLE (in COMBINATION SWITCH)

A spiral cable is used as an electrical joint from the vehicle body side to the steering wheel.

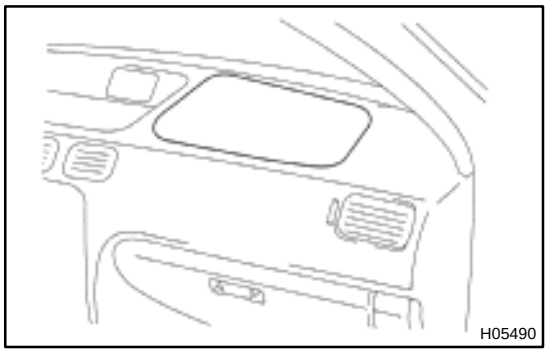

3. FRONT PASSENGER AIRBAG ASSEMBLY

The inflater and bag of the SRS are stored in the front passenger airbag assembly and cannot be disassembled. The inflater contains a squib, igniter charge and gas generant, etc., and inflates the bag when instructed by the airbag sensor assembly.

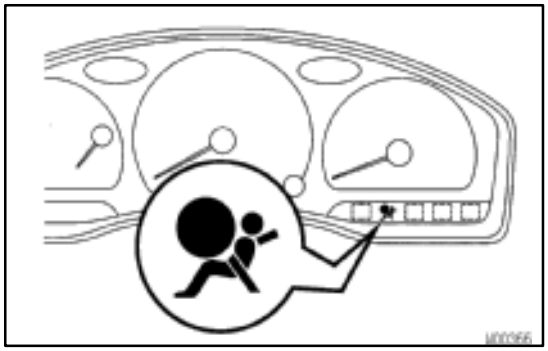

4. SRS WARNING LIGHT

The SRS warning light is located on the combination meter. It goes on to alert the driver of trouble in the system when a malfunction is detected in the airbag sensor assembly self–diagnosis. In normal operating conditions when the ignition switch is turned to the ACC or ON position, the light goes on for about 6 seconds and then goes off.

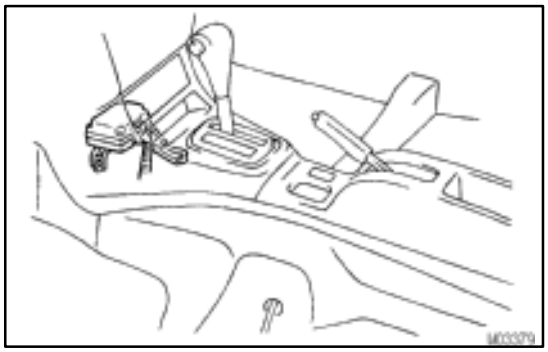

5. AIRBAG SENSOR ASSEMBLY

The airbag sensor assembly is mounted on the floor inside the center cluster. The airbag sensor assembly consists of airbag sensor, safing sensor, diagnosis circuit, ignition control and drive circuit, etc. It receives signals from the airbag sensor and judges whether the SRS must be activated or not.

6. SRS CONNECTORS

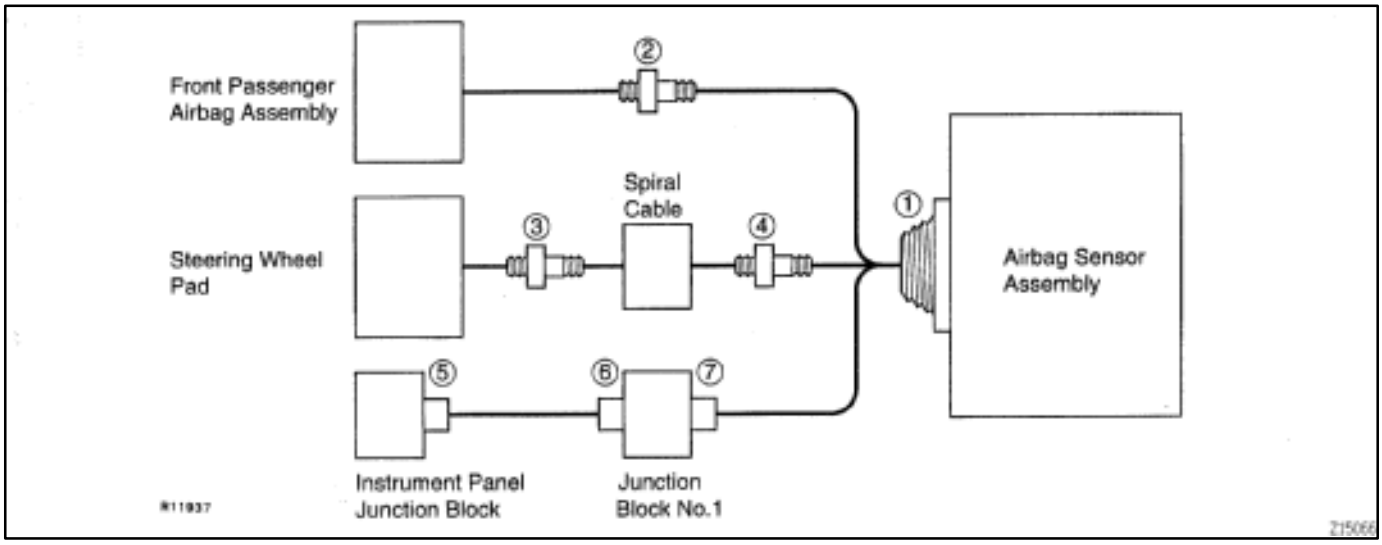

No.	Item	Application
(1)	Terminal Twin–Lock Mechanism	Connectors 1, 2, 3, 4, 5, 6, 7
(2)	Airbag Activation Prevention Mechanism	Connectors 2, 3, 4
(3)	Electrical Connection Check Mechanism	Connectors 1
(4)	Connector Twin–Lock Mechanism	Connectors 2, 3, 4

(a) All connectors in the SRS are colored in yellow to distinguish them from other connectors. Connectors having special functions and specifically designed for SRS are used in the locations shown above to ensure high reliability. These connectors use durable gold–plated terminals.

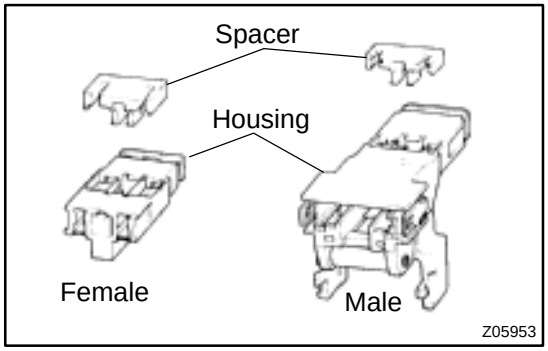

(1) Terminal Twin–Lock Mechanism
Each connector has a two–piece construction consisting of a housing and a spacer. This design enables the terminal to be locked securely by two locking devices (the spacer and the lance) to prevent terminals from coming out.

(2) Airbag Activation Prevention Mechanism
Each connector contains a short spring plate. When the connector is disconnected, positive (+) terminal and negative (–) terminal of the squib are attached.

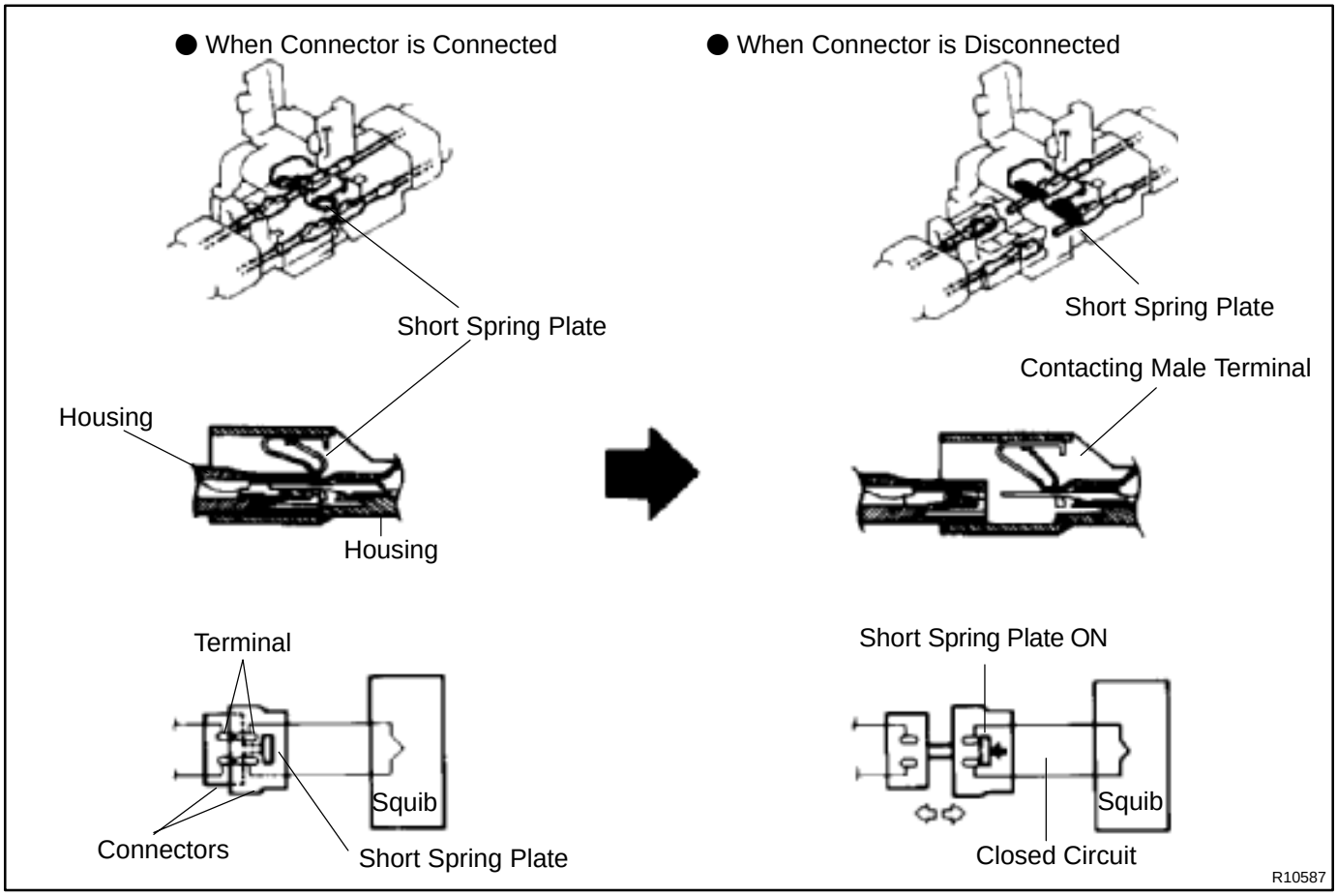

HINT:
The type of connector shown above is used for the connectors ”1”, ”2”, ”3”, ”4”, ”5” and ”7” in the diagram on the previous page, but the operating principle is the same.

(3) Electrical Connection Check Mechanism
This mechanism is designed to electrically check if connectors are connected correctly and completely. The electrical connection check mechanism is designed so that the connection detection pin connects with the diagnosis terminals when the connector housing lock is in the locked condition.

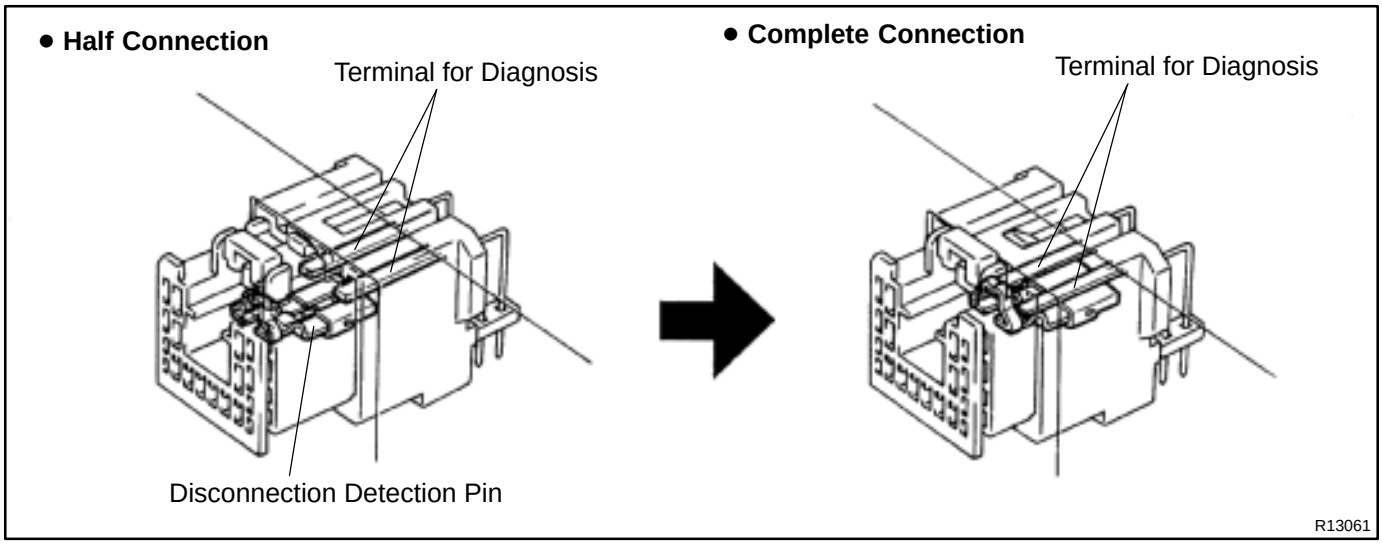

(4) Connector Twin–Lock Mechanism
With this mechanism connectors (male and female connectors) are locked by two locking devices to increase connection reliability.

If the primary lock is incomplete, ribs interfere and prevent the secondary lock.

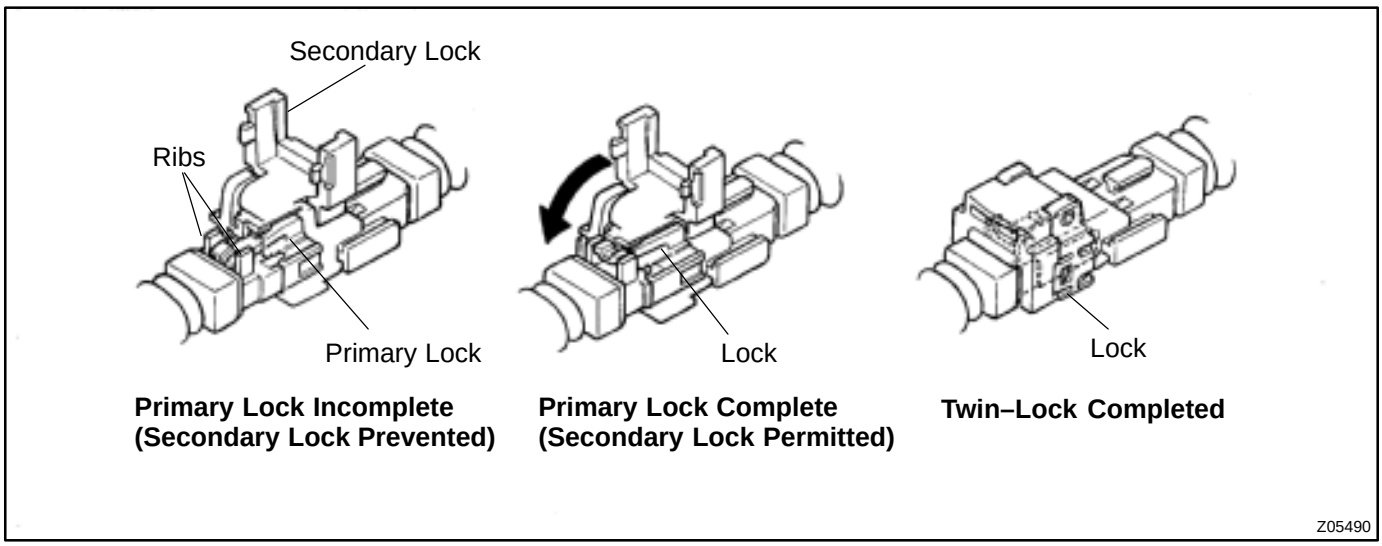



Fig.1

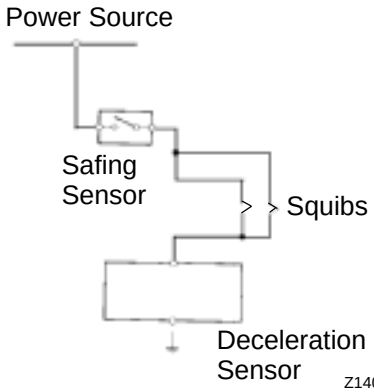

Fig.2

(b) When the vehicle is involved in a frontal collision in the hatched area (Fig. 1) and the shock is larger than the predetermined level, the SRS is activated automatically. A safing sensor is designed to go on at a smaller deceleration rate than the airbag sensors. As illustrated in Fig. 2, ignition is caused when a safing sensor and the deceleration sensor go on simultaneously. When a deceleration force acts on the sensors, two squibs in the driver airbag and front passenger airbag ignite and generate gas. The gas discharging into the driver and front passenger airbags rapidly increases the pressure inside the bags breaking open the steering wheel pad and instrument panel door. Bag inflation then ends, and the bags deflate as the gas is discharged through discharge holes at the bag's rear or side.

SRS AIRBAG

RS02V–10

PRECAUTION

NOTICE:

- **The PASEO is equipped with an SRS, which comprises a driver airbag and front passenger airbag. Failure to carry out service operations in the correct sequence could cause the SRS to unexpectedly deploy during servicing, possibly leading to a serious accident. Further, if a mistake is made in servicing the SRS, it is possible the SRS may fail to operate when required. Before performing servicing (including removal or installation of parts, inspection or replacement), be sure to read the following items carefully, then follow the correct procedure described in the repair manual.**
- **Malfunction symptoms of the SRS are difficult to confirm, so the DTCs become the most important source of information when troubleshooting the SRS, always inspect the DTCs before disconnecting the battery.**
- **Even in cases of a minor collision where the SRS does not deploy, the steering wheel pad, front passenger airbag assembly and airbag sensor assembly should be inspected (See page RS–9, RS–23, RS–35).**
- **Never use SRS parts from another vehicle. When replacing parts, replace them with new parts.**
- **Never disassemble and repair the steering wheel pad, front passenger airbag assembly or airbag sensor assembly in order to reuse it.**
- **If the steering wheel pad, front passenger airbag assembly or airbag sensor assembly has been dropped, or if there are cracks, dents or other defects in the case, bracket or connector, replace them with new ones.**
- **Use a volt/ohmmeter with high impedance (10 kΩ/V minimum) for troubleshooting the system's electrical circuits.**
- **Information labels are attached to the periphery of the SRS components. Follow the instruction on the notices.**
- **After work on the SRS is completed, check the SRS warning light (See page DI–211).**
- **If the vehicle is equipped with a mobile communication system, refer to the precaution in the IN section.**

CAUTION:

- **Work must be started 90 seconds after the ignition switch is turned to the "LOCK" position and the negative (–) terminal cable is disconnected from the battery. (The SRS is equipped with a back–up power source so that if work is started within 90 seconds of disconnecting the negative (–) terminal cable of the battery, the SRS may be deployed.)**
- **When the negative (–) terminal cable is disconnected from the battery, the memory of the clock and audio system will be canceled. So before starting work, make a record of the contents memorized in the audio memory system. When work is finished, reset the audio systems as before and adjust the clock. To avoid erasing the memory of each memory system, never use a back–up power supply from outside the vehicle.**
- **Before repairs, remove the airbag sensor if shocks are likely to be applied to the sensor during repairs.**
- **Do not expose the steering wheel pad, front passenger airbag assembly or airbag sensor assembly directly to hot air or flames.**

STEERING WHEEL PAD AND SPIRAL CABLE

RS02X–10

COMPONENTS

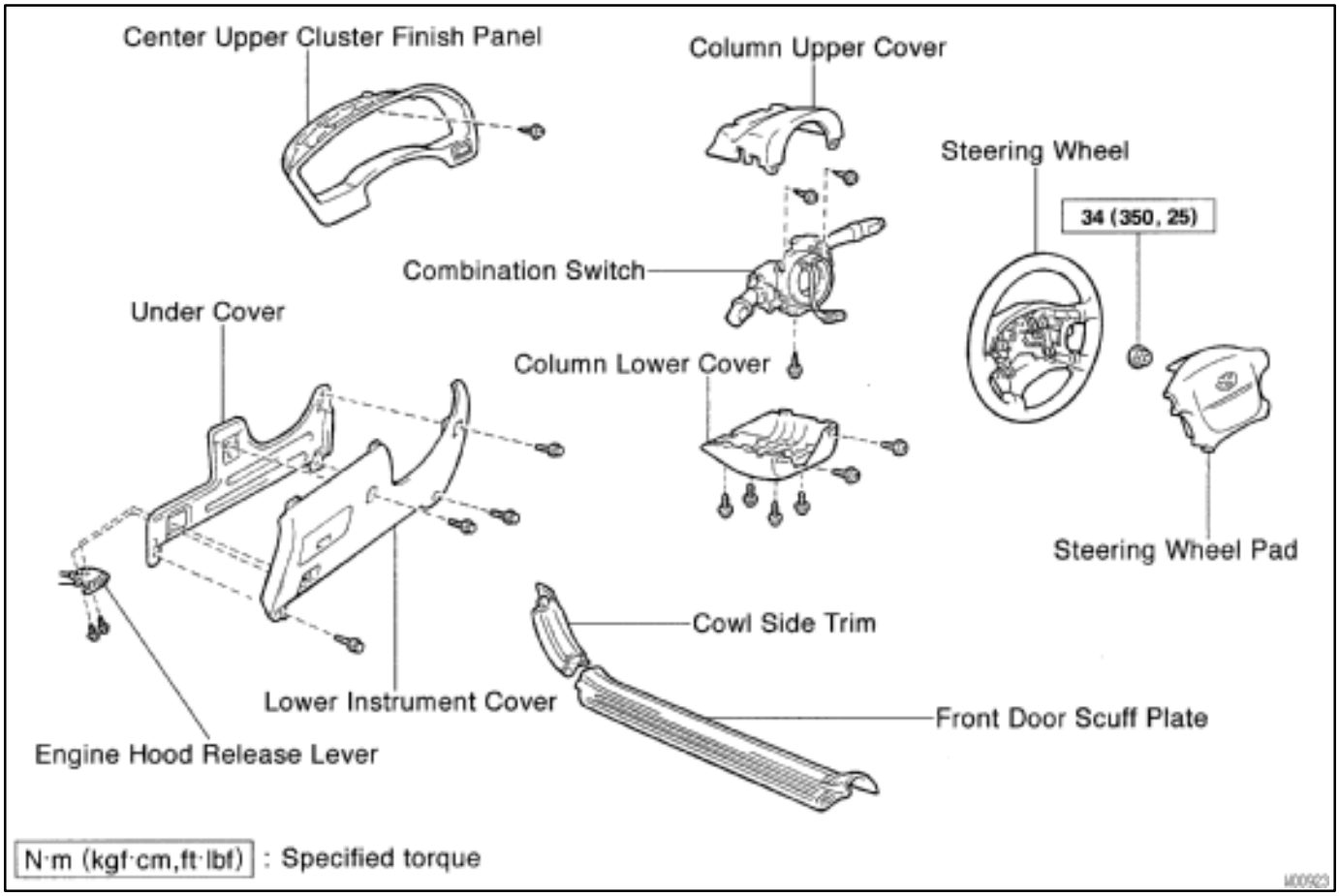

RS030–11

DISPOSAL

HINT:

When scrapping vehicle equipped with an SRS or disposing of a steering wheel pad (with airbag), always first deploy the airbag in accordance with the procedure described below. If any abnormality occurs with the airbag deployment, contact the SERVICE DEPT. of TOYOTA MOTOR SALES, U.S.A., INC.

When disposing of a steering wheel pad with an airbag deployed in a collision, follow the same procedure given in step 1–(d) in ”DISPOSAL”.



CAUTION:

- **Never dispose of a steering wheel pad which has an undeployed airbag.**
- **The airbag produces a sizeable exploding sound when it deploys, so perform the operation out–of–doors and where it will not create a nuisance to nearby residents.**
- **When deploying the airbag, always use the specified SST (SRS Airbag Deployment Tool). Perform the operation in a place away from electrical noise.**
  SST 09082–00700
- **When deploying an airbag, perform the operation at least 10 m (33 ft) away from the steering wheel pad.**
- **The steering wheel pad is very hot when the airbag is deployed, so leave it alone for at least 30 minutes after deployment.**
- **Use gloves and safety glasses when handling a steering wheel pad with deployed airbag.**
- **Always wash your hands with water after completing the operation.**
- **Do not apply water, etc. to a steering wheel pad with deployed airbag.**

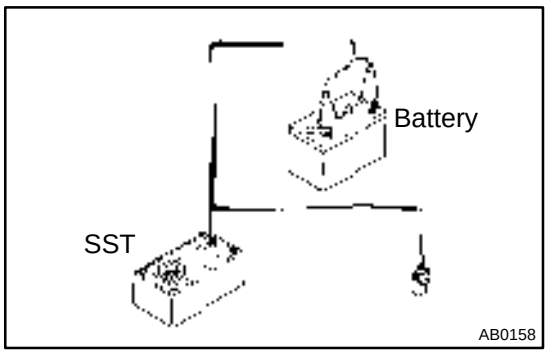

1. AIRBAG DEPLOYMENT WHEN SCRAPPING VEHICLE

HINT:
Have a battery ready as the power source to deploy the airbag.



(a) Check functioning of the SST.

CAUTION:
When deploying the airbag, always use the specified SST: SRS Airbag Deployment Tool.

SST 09082–00700

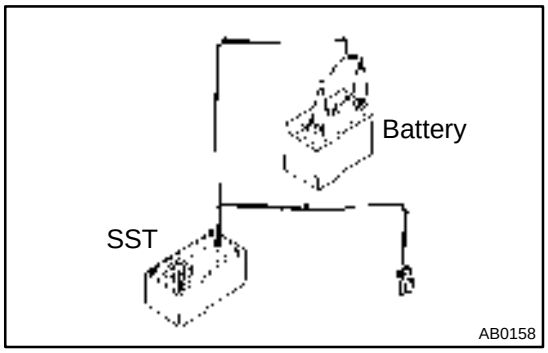

(1) Connect the SST to battery.
Connect the red clip of the SST to the battery positive (+) terminal and the black clip to the battery negative (–) terminal.

HINT:
Do not connect the yellow connector which will be connected with the supplemental restraint system.

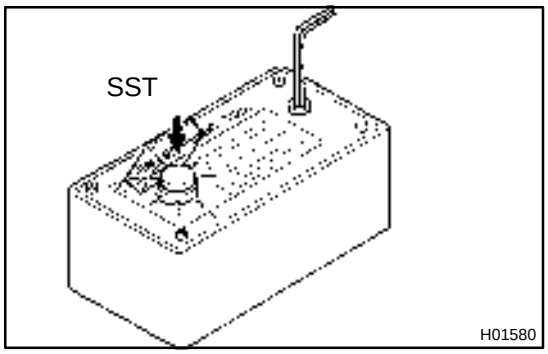

(2) Check functioning of the SST.
Press the SST activation switch, and confirm the LED of the SST activation switch lights up.

CAUTION:
If the LED lights up when the activation switch is not being pressed, SST malfunction is probable, so definitely do not use the SST.

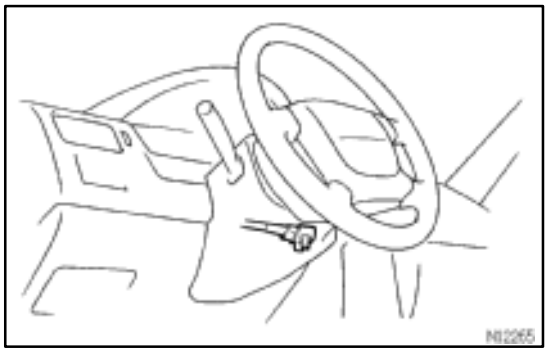

(b) Install the SST.

CAUTION:
Check that there is no looseness in the steering wheel and steering wheel pad.

(1) Remove the steering column lower cover.
Remove the 3 screws and steering column lower cover as shown in the illustration.

(2) Disconnect the airbag connector of the spiral cable.

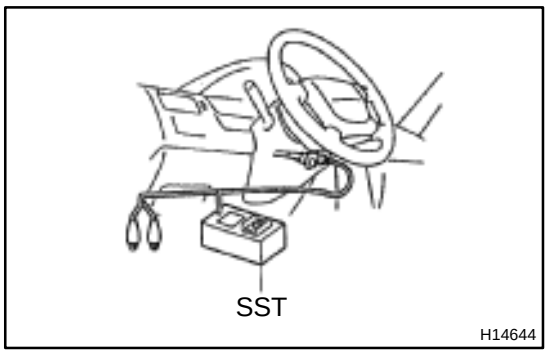

(3) Connect the SST connector to the airbag connector of the spiral cable.

SST 09082–00700

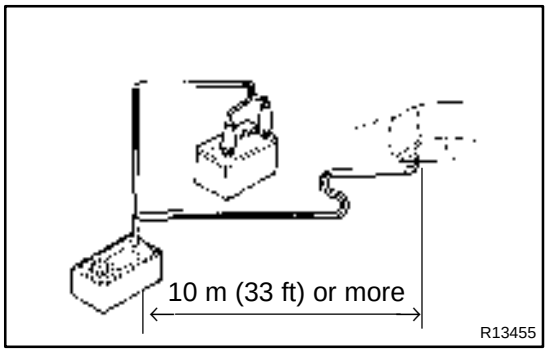

(4) Move the SST to at least 10 m (33 ft) away from the front of the vehicle.

(5) Close all the doors and windows of the vehicle.

NOTICE:

Take care not to damage the SST wire harness.

(6) Connect the SST red clip to the battery positive (+) terminal and the black clip to the negative (–) terminal.

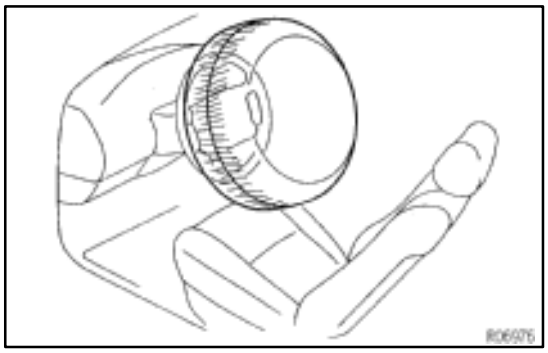

(c) Deploy the airbag.

(1) Check that no one is inside the vehicle or within 10 m (33 ft) area around the vehicle.

(2) Press the SST activation switch and deploy the airbag.

HINT:

The airbag deploys simultaneously as the LED of the SST activation switch lights up.

(d) Dispose of the steering wheel pad (with airbag).

CAUTION:

- **The steering wheel pad is very hot when the airbag is deployed, so leave it alone for at least 30 minutes after deployment.**
- **Use gloves and safety glasses when handling a steering wheel pad with deployed airbag.**
- **Always wash your hands with water after completing the operation.**
- **Do not apply water, etc. to a steering wheel pad with deployed airbag.**

(1) When scrapping a vehicle, deploy the airbag and scrap the vehicle with the steering wheel pad still installed.

(2) When moving a vehicle for scrapping which has a steering wheel pad with deployed airbag, use gloves and safety glasses.

2. DEPLOYMENT WHEN DISPOSING OF STEERING WHEEL PAD ONLY

NOTICE:

- **When disposing of the steering wheel pad (with airbag) only, never use the customers vehicle to deploy the airbag.**
- **Be sure to follow the procedure given below when deploying the airbag.**

HINT:

Have a battery ready as the power source to deploy the airbag.

(a) Remove the steering wheel pad (See page SR–12).

CAUTION:

When storing the steering wheel pad, keep the upper surface of the pad facing upward.

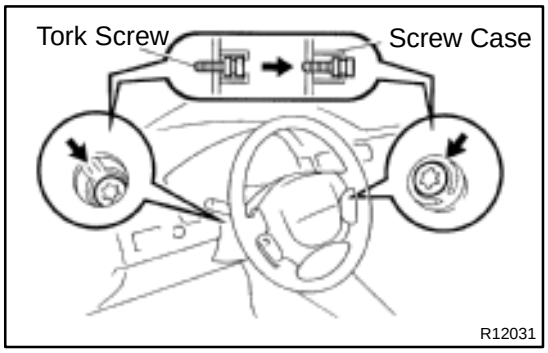

(b) Remove the connector on the steering wheel pad rear surface from the inflater cover.

(c) Remove the steering wheel pad and cover.

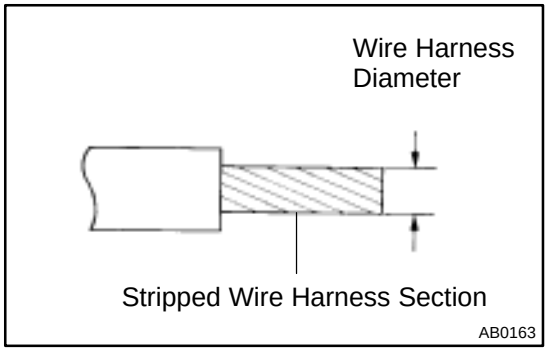

(d) Using a service–purpose wire harness for the vehicle tie down the steering wheel pad to the disc wheel
Wire harness: Stripped wire harness section 1.25 mm^2 or more (0.0019 $in.^2$ or more).

CAUTION:

If a wire harness which is too thin or some other thing is used to tie down the steering wheel pad, it may be snapped by the shock when the airbag is deployed. This is highly dangerous. Always use a wire harness for vehicle use which is at least 1.25 mm^2 (0.0019 $in.^2$).

HINT:

To calculate the square of the stripped wire harness section:
Square = 3.14 X $(Diameter)^2$ divided by 4

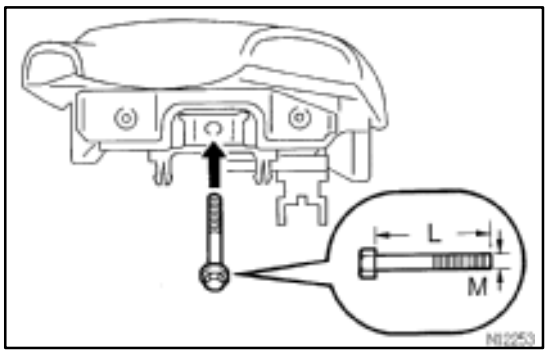

(1) Install the 2 bolts with washers in the 3 bolt holes in the steering wheel pad.

Bolt:
L: 35.0 mm (1.387 in.)
M: 6.0 mm (0.236 in.)
Pitch: 1.0 mm (0.039 in.)

NOTICE:

- **Tighten the bolts by hand until the bolts become difficult to turn.**
- **Do not tighten the bolts too much.**

(2) Using 3 wire harness, wind the wire harness at least 2 times each around the bolts installed on the left and right sides of the steering wheel pad.

CAUTION:

- **Tightly wind the wire harness around the bolts so that there is no slack.**
- **If there is slackness in the wire harness, the steering wheel pad may come loose due to the shock when the airbag is deployed. This is highly dangerous.**

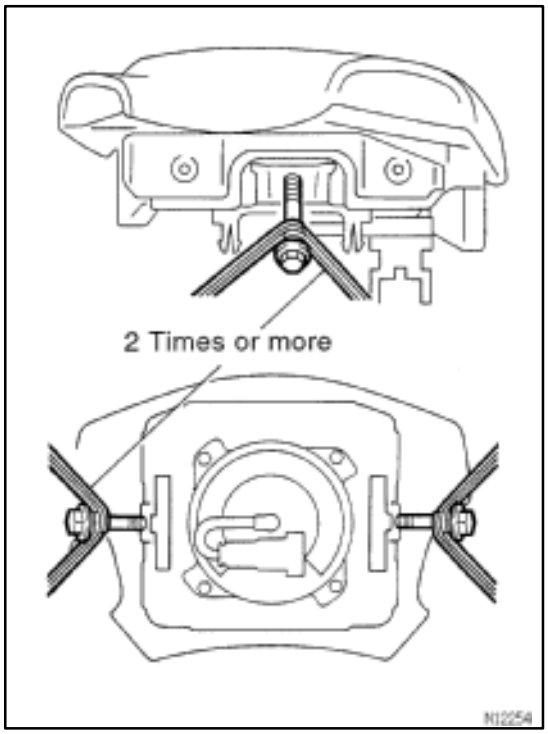

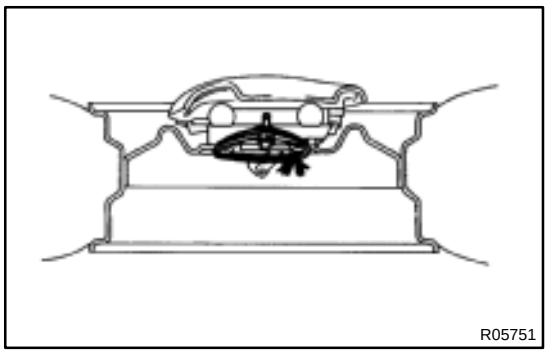

(3) Face the upper surface of the steering wheel pad upward. Separately tie the left and right sides of the steering wheel pad to the disc wheel through the hub nut holes. Position the steering wheel pad connector so that it hangs downward through a hub hole in the disc wheel.

CAUTION:

- **Make sure that the wire harness is tight. It is very dangerous if looseness in the wire harness results in the steering wheel pad coming free through the shock of the airbag deploying.**
- **Always tie down the steering wheel pad with the pad side facing upward. It is very dangerous if the steering wheel pad is tied down with the metal surface facing to the airbag deploying direction and the steering wheel pad will be thrown into the air.**

HINT:
The disc wheel will be marked by airbag deployment, so when disposing of the airbag use a redundant disc wheel.

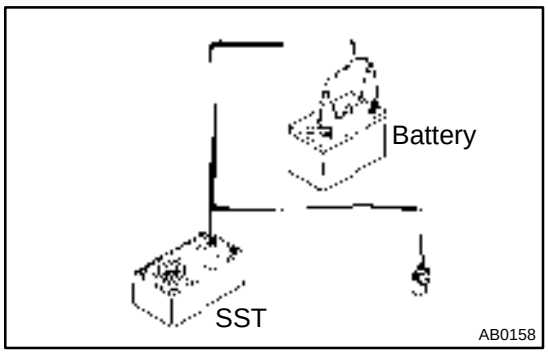

(e) Check functioning of the SST.
SST 09082–00700

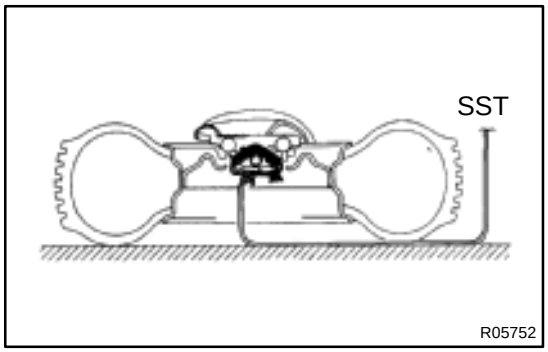

(f) Install the SST.

CAUTION:

Place the disc wheel on level ground.

(1) Connect the SST connector to the steering wheel pad connector.
SST 09082–00700

NOTICE:

To avoid damaging the SST connector and wire harness, do not lock the secondary lock of the twin lock. Also, provide some slack for the SST wire harness inside the disc wheel.

(2) Move the SST to at least 10 m (33 ft) away from the steering wheel pad tied down on the disc wheel.

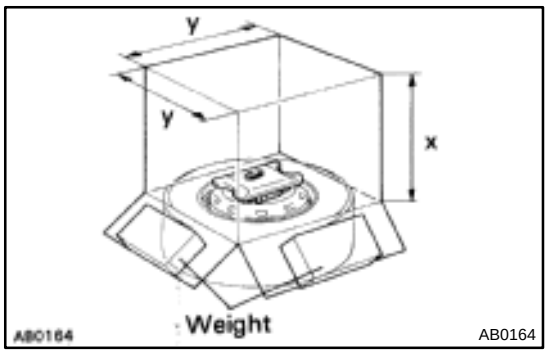

(g) Cover the steering wheel pad with cardboard box or tires.

- Covering method using cardboard box:
  Cover the steering wheel pad with the cardboard box and weight the cardboard box down in 4 places with at least 196 N (20 kg, 44 lb).

  Size of cardboard box:
  Must exceed the following dimensions:
  x= 460 mm (18.11 in.)
  When dimension y of the cardboard box exceeds the diameter of the disc wheel with tire to which the steering wheel pad is tied –
  x= 460 mm (18.11 in.) + width of tire
  y= 650 mm (25.59 in.)

NOTICE:

If a cardboard box smaller than the specified size is used, the cardboard box will be broken by the shock of the airbag deployment.

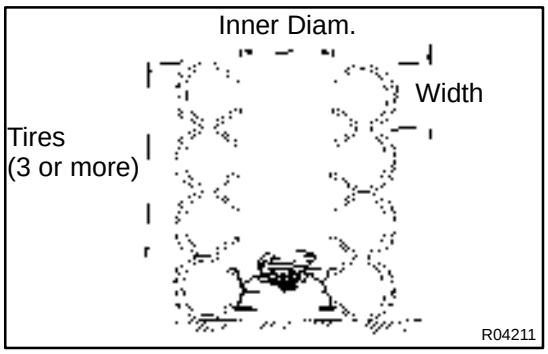

- Covering method using tires:
  Place at least 3 tires without disc wheel on top of the disc wheel with tire to which the steering wheel pad is tied.

Tire size: Must exceed the following dimensions–
Width: 185 mm (7.28 in.)
Inner diameter: 360 mm (14.17 in.)

CAUTION:
Do not use tires with disc wheels.

NOTICE:
The tires may be marked by the airbag deployment, so use redundant tires.

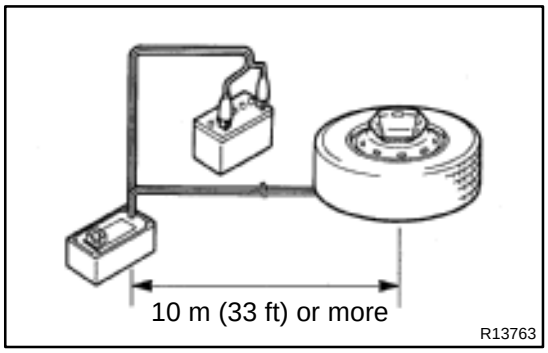

(h) Deploy the airbag.
  (1) Connect the SST red clip to the battery positive (+) terminal and the black clip to the battery negative (–) terminal.
  (2) Confirm that no one is within 10 m (33 ft) area around the disc wheel to which the steering wheel pad is tied.
  (3) Press the SST activation switch and deploy the airbag.

HINT:
The airbag deploys simultaneously as the LED of the SST activation switch lights up.



(i) Dispose of the steering wheel pad (with airbag).

CAUTION:
- **The steering wheel pad is very hot when the airbag is deployed, so leave it alone for at least 30 minutes after deployment.**
- **Use gloves and safety glasses when handling a steering wheel pad with deployed airbag.**
- **Always wash your hands with water after completing the operation.**

- **Do not apply water, etc. to a steering wheel pad with deployed airbag.**
  (1) Remove the steering wheel pad from the disc wheel.
  (2) Place the steering wheel pad in a vinyl bag, tie the end tightly and dispose of it in the same way as other general parts.

RS0OD–01

INSPECTION

1. VEHICLE NOT INVOLVED IN COLLISION

(a) Do a diagnostic system check (See page DI–211).

(b) Do a visual check which includes the following items with the steering wheel pad (with airbag) installed in the vehicle.

Check for cuts, minute cracks or marked discoloration of the steering wheel pad top surface and grooved portion.

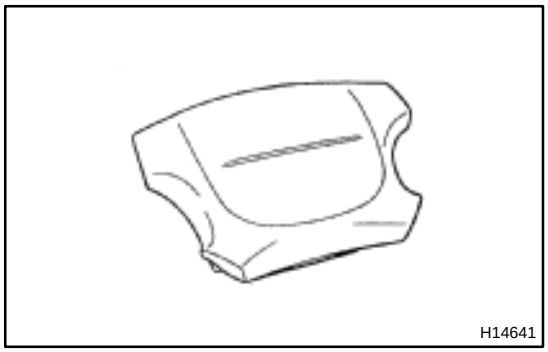

2. VEHICLE INVOLVED IN COLLISION AND AIRBAG IS NOT DEPLOYED

(a) Do a diagnostic system check (See page DI–211).

(b) Do a visual check which includes the following items with the steering wheel pad (with airbag) installed in the vehicle.

- Check for cuts and cracks in, or marked discoloration of the steering wheel pad top surface and grooved portion.
- Check for cuts and cracks in wire harnesses, and for chipping in connectors.
- Check for deformation of the horn button contact plate of the steering wheel.

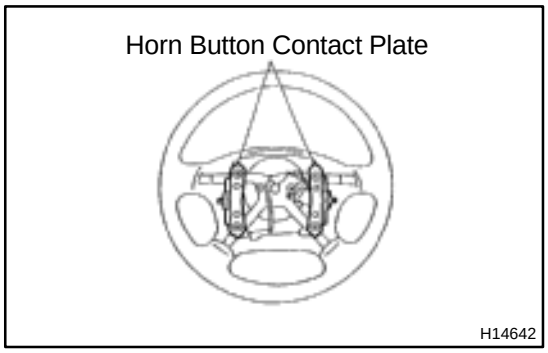

HINT:

- If the horn button contact plate of the steering wheel is deformed, never repair it. Always replace the steering wheel assembly with a new one.
- There should be no interference between the steering wheel pad and the steering wheel, and the clearance should be uniform all the way around when the new steering wheel pad is installed on the steering wheel.

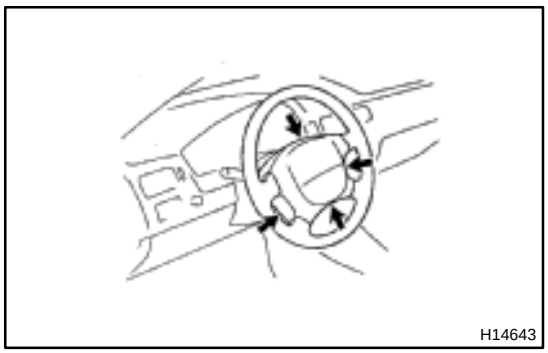

CAUTION:

For removal and installation of the steering wheel pad, see page SR–12, SR–18 and be sure to follow the correct procedure.

3. VEHICLE INVOLVED IN COLLISION AND AIRBAG IS DEPLOYED

(a) Do diagnostic system check (See page DI–211).

(b) Do a visual check which includes the following items with the steering wheel pad (with airbag) removed from the vehicle.

- Check for deformation of the horn button contact plate of the steering wheel.
- Check for damage to the spiral cable connector and wire harness.

HINT:

- If the horn button contact plate of the steering wheel is deformed, never repair it. Always replace the steering wheel assembly with a new one.
- There should be no interference between the steering wheel pad and the steering wheel, and the clearance should be uniform all the way around when the new steering wheel pad is installed on the steering wheel.

RS032–09

INSTALLATION

(See page SR–18)

RS02Y–05

REMOVAL

(See page SR–12)

RS031–07

REPLACEMENT

REPLACEMENT REQUIREMENTS

In the following cases, replace the steering wheel pad, steering wheel or spiral cable.

Case	Replacing part
If the airbag has been deployed.	Steering wheel pad
If the steering wheel pad has been found to be faulty in troubleshooting.	Steering wheel pad
If the spiral cable has been found to be faulty in troubleshooting.	Spiral cable
If the steering wheel pad has been found to be faulty during checking items (See page RS–9).	Steering wheel pad
If the steering wheel has been found to be faulty during checking items (See page RS–9).	Steering wheel
If the spiral cable has been found to be faulty during checking items (See page RS–9).	Spiral cable
If the steering wheel pad has been dropped.	Steering wheel pad

CAUTION:

For replacement of the steering wheel pad, see page SR–12 and SR–18, and be sure to follow the correct procedure.

RS03E–04

INSPECTION

HINT:

The SRS wire harness is integrated with the cowl wire harness assembly. The wires for the SRS wire harness are encased in a yellow corrugated tube and all the connectors in the system are a standard yellow color.

1. VEHICLES NOT INVOLVED IN COLLISION

Do a diagnostic system check (See page DI–211).

2. VEHICLES INVOLVED IN COLLISION

(a) Do a diagnostic system check (See page DI–211).

(b) Check for breaks in all wires of the SRS wire harness, and for exposed conductors.

(c) Check to see if the SRS wire harness connectors are cracked or chipped.

WIRE HARNESS AND CONNECTOR

RS03D–12

LOCATION

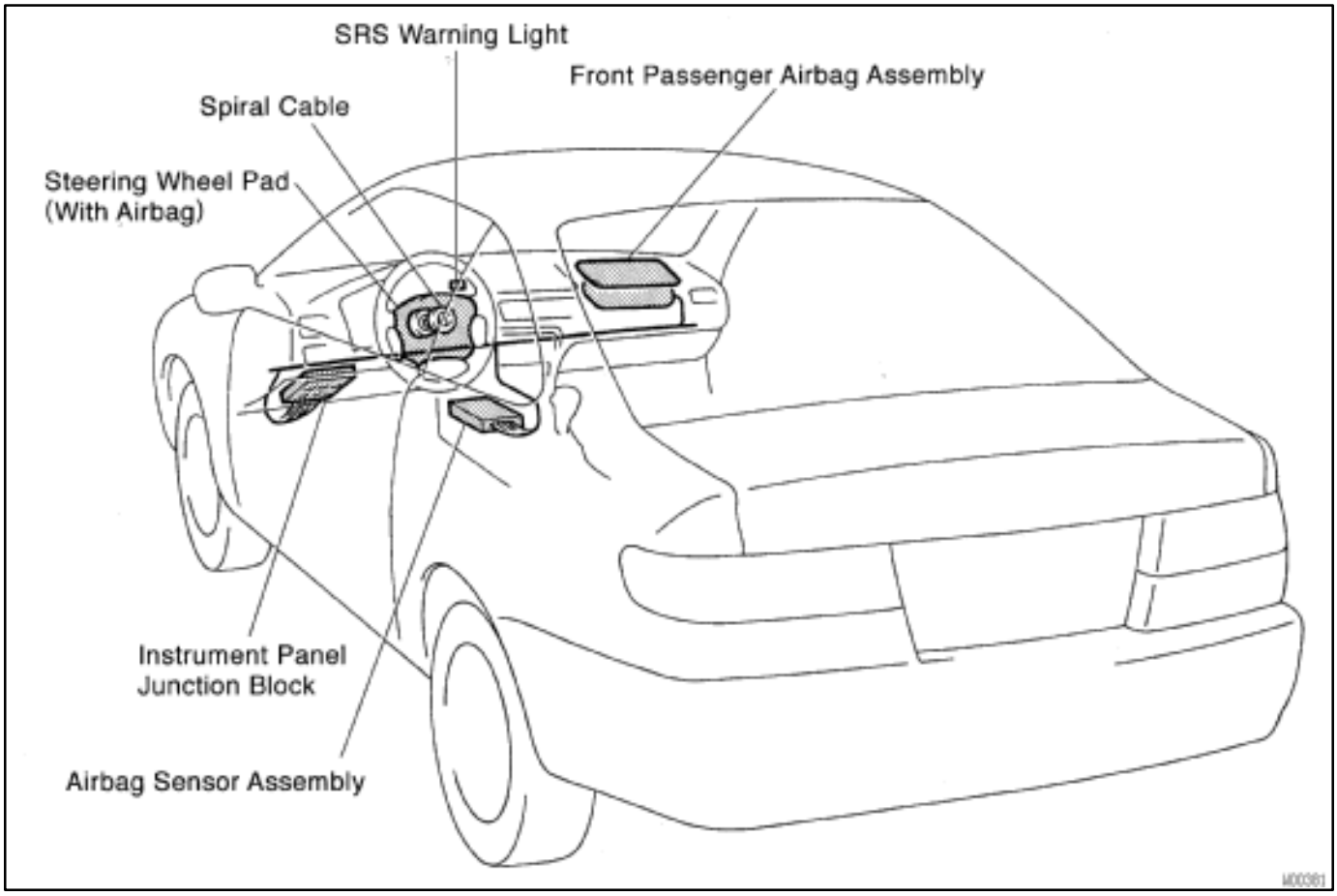

RS03F–06

REPLACEMENT

REPLACEMENT REQUIREMENTS

In the following cases, replace the wire harness or connector.

- If any part of the SRS wire harness or any connector has been found to be faulty in troubleshooting.
- If any part of the SRS wire harness or any connector has been found to be faulty during checking item 2–(b) or (c)

NOTICE:

If the wire harness used in the SRS is damaged, replace the whole wire harness assembly. When the connector to the front airbag sensors can be repaired alone (when there is no damaged to the wire harness) , use the repair wire specially designed for the purpose.

FRONT AXLE HUB

COMPONENTS

SA113–03

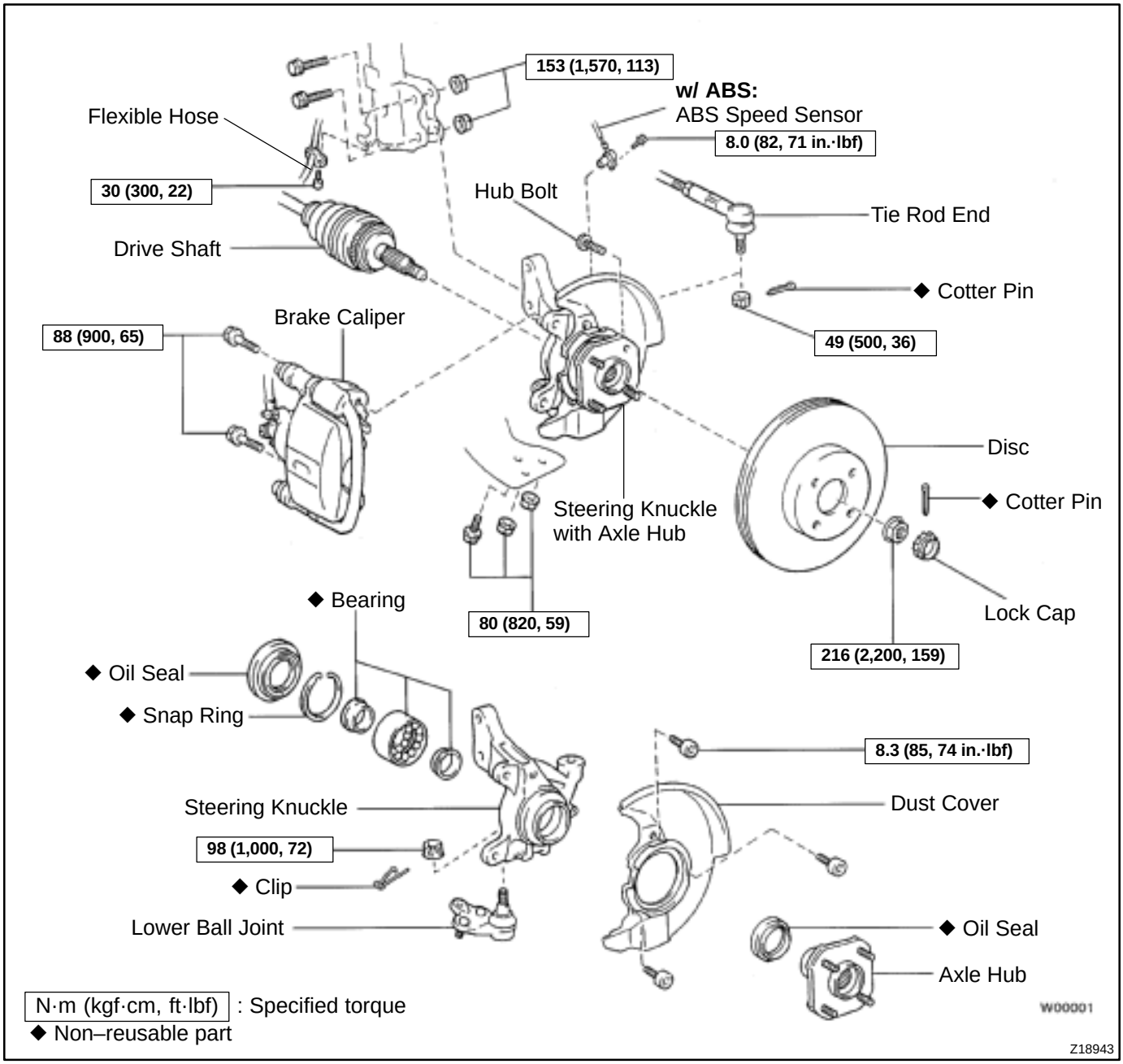

SA115–01

DISASSEMBLY

1. REMOVE LOWER BALL JOINT

(a) Remove the clip and nut.

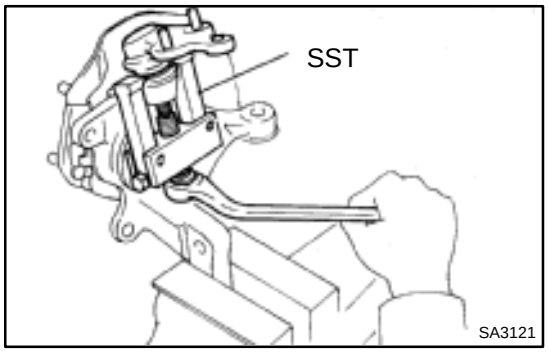

(b) Using SST, remove the lower ball joint.
SST 09628–62011

2. REMOVE INNER OIL SEAL

Using a screwdriver, remove the inner oil seal.

3. REMOVE DUST COVER SET BOLTS

Using a torx wrench (T30), remove the 3 bolts.

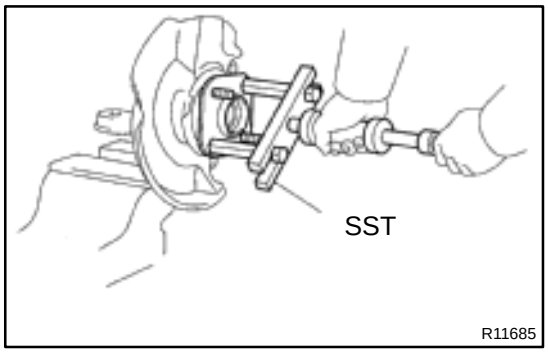

4. REMOVE AXLE HUB AND DUST COVER

(a) Using SST, remove the axle hub from the steering knuckle.
SST 09520–00031

(b) Remove the dust cover.

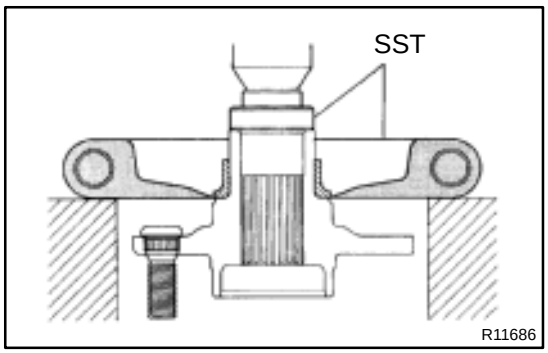

5. REMOVE INNER RACE (OUTSIDE) FROM AXLE HUB

Using SST and a press, remove the inner race from the axle hub.
SST 09631–12040, 09950–00020

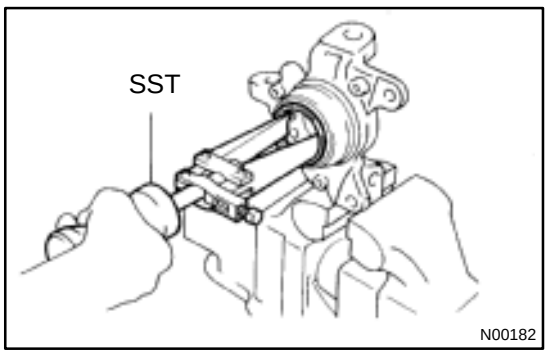

6. REMOVE OUTER OIL SEAL

Using SST, remove the outer oil seal.
SST 09308–00010

7. REMOVE BEARING FROM STEERING KNUCKLE

(a) Using snap ring pliers, remove the snap ring.

(b) Place the inner race on the outside of the bearing.

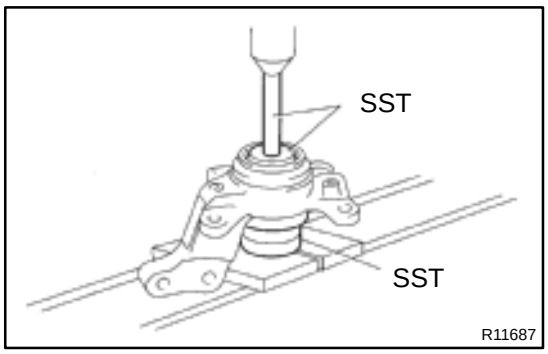

(c) Using SST and a press, remove the bearing from the steering knuckle.
SST 09223–15020, 09950–60010 (09951–00650), 09950–70010 (09951–07150)

SA117–01

INSTALLATION

Installation is in the reverse order of removal (See page SA–10).

AFTER INSTALLATION, CHECK ABS SPEED SENSOR SIGNAL (See page DI–173) AND FRONT WHEEL ALIGNMENT (See page SA–4)

SA116–01

REASSEMBLY

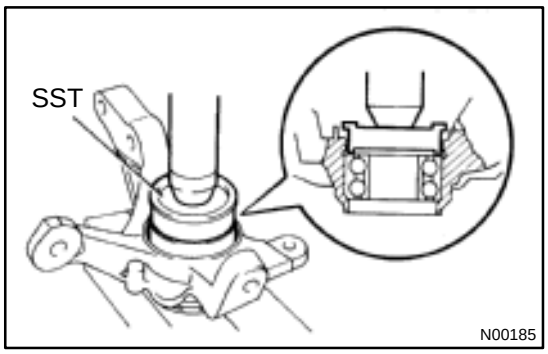

1. INSTALL BEARING

(a) Using SST and a press, install a new bearing to the steering knuckle.
SST 09608–10010

NOTICE:

If the inner race and balls come loose from the bearing outer race, be sure to install them on the same side as before.

(b) Using snap ring pliers, install the snap ring.

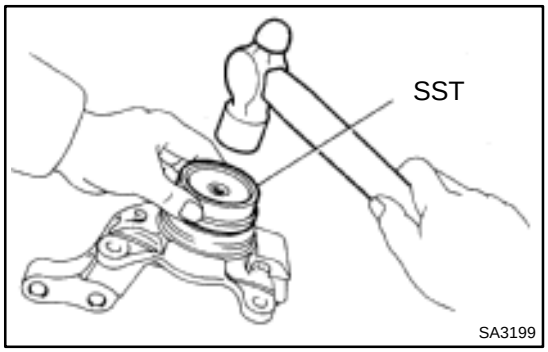

2. INSTALL OUTER OIL SEAL

(a) Using SST and a hammer, install a new outer oil seal.
SST 09608–10010

(b) Coat the oil seal lip with MP grease.

3. INSTALL DUST COVER

(a) Place the dust cover on the steering knuckle.

(b) Using a torx wrench (T30), tighten the 3 bolts.
Torque: 8.3 N·m (85 kgf·cm, 74 in.·lbf)

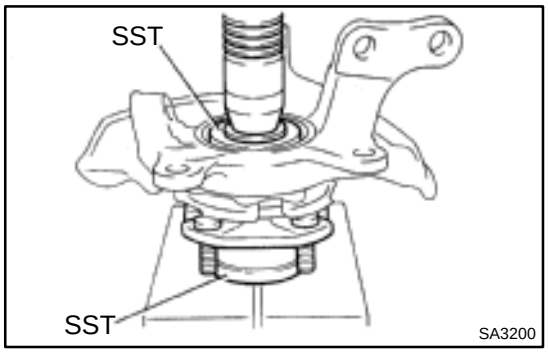

4. INSTALL AXLE HUB

Using SST and a press, install the axle hub.
SST 09608–10010, 09950–60010 (09951–00610)

5. INSTALL LOWER BALL JOINT

(a) Install the lower ball joint and tighten the nut.
Torque: 98 N·m (1,000 kgf·cm, 72 ft·lbf)

(b) Install a new clip.

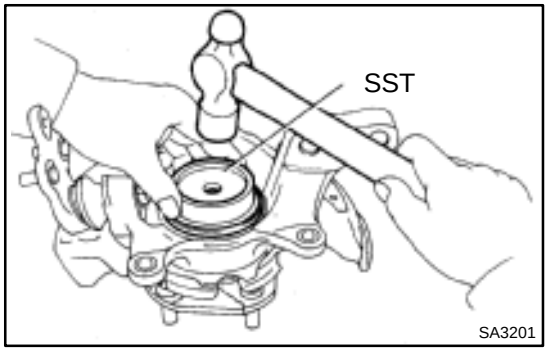

6. INSTALL INNER OIL SEAL

(a) Using SST and a hammer, install a new inner oil seal.
SST 09608–10010

(b) Coat the oil seal lip with MP grease.

SA114–01

REMOVAL

1. REMOVE FRONT WHEEL
Torque: 103 N·m (1,050 kgf·cm, 76 ft·lbf)

2. CHECK BEARING BACKLASH AND AXLE HUB DEVIATION

(a) Remove the 2 bolts, brake caliper and disc.
(b) Support the brake caliper securely.

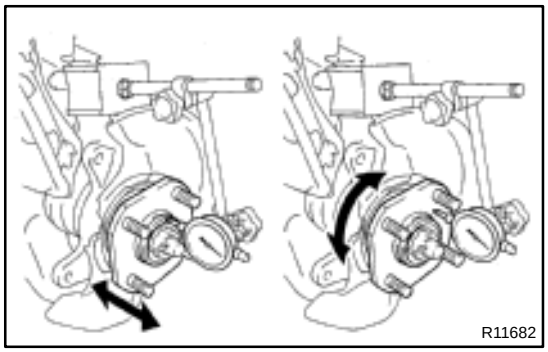

(c) Using a dial indicator, check the backlash near the center of the axle hub.
Maximum: 0.05 mm (0.0020 in.)

If the backlash exceeds the maximum, replace the bearing.

(d) Using a dial indicator, check the deviation at the surface of the axle hub outside the hub bolt.
Maximum: 0.05 mm (0.0020 in.)

If the deviation exceeds the maximum, replace the bearing.

(e) Install the disc, 2 bolts and brake caliper.
Torque: 88 N·m (900 kgf·cm, 65 ft·lbf)

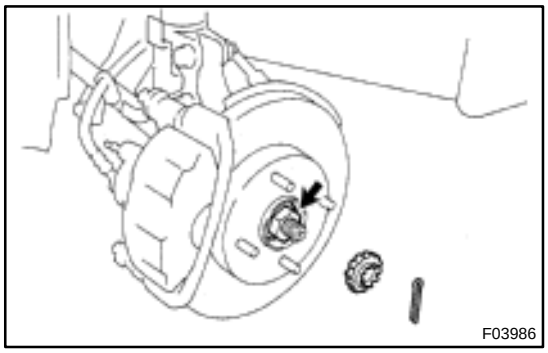

3. REMOVE DRIVE SHAFT LOCK NUT

(a) Remove the cotter pin and lock cap.
(b) While applying the brakes, remove the nut.
Torque: 216 N·m (2,200 kgf·cm, 159 ft·lbf)
(c) Remove the brake caliper and disc.
(d) Support the brake caliper securely.

4. w/ ABS:
REMOVE BOLT AND ABS SPEED SENSOR
Torque: 8.0 N·m (82 kgf·cm, 71 in.·lbf)

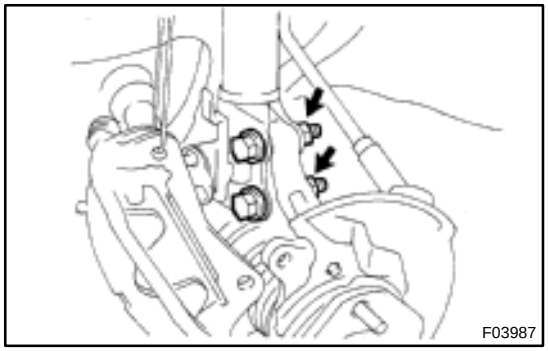

5. LOOSEN 2 NUTS ON LOWER SIDE OF SHOCK ABSORBER
Torque: 153 N·m (1,570 kgf·cm, 113 ft·lbf)

HINT:

- Do not remove the bolts.
- At the time of installation, coat the nut's thread with engine oil.

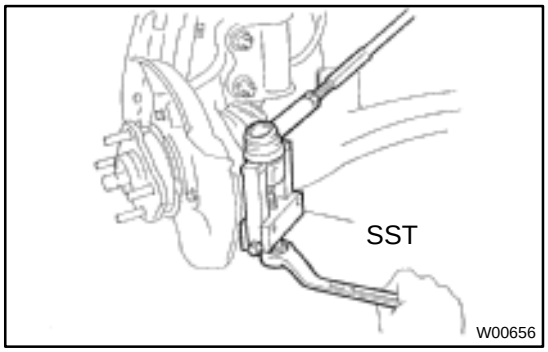

6. DISCONNECT TIE ROD END FROM STEERING KNUCKLE

(a) Remove the cotter pin and nut.
Torque: 49 N·m (500 kgf·cm, 36 ft·lbf)
(b) Using SST, disconnect the tie rod end from the steering knuckle.
SST 09628–62011

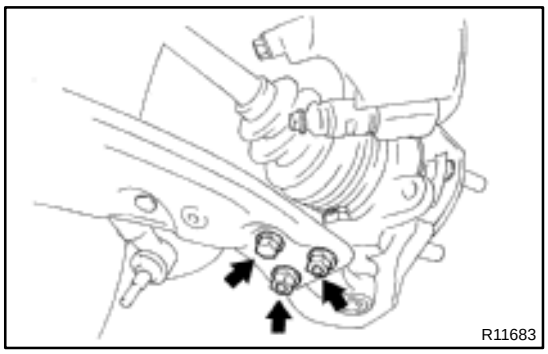

7. DISCONNECT LOWER BALL JOINT FROM LOWER SUSPENSION ARM

Remove the 2 nuts and bolt.

Torque: 80 N·m (820 kgf·cm, 59 ft·lbf)

8. REMOVE STEERING KNUCKLE WITH AXLE HUB

(a) Remove the 2 nuts and bolts on lower side of the shock absorber.

(b) Remove the steering knuckle with the axle hub.

NOTICE:

Be careful not to damage the oil seal with the drive shaft.

FRONT DRIVE SHAFT

COMPONENTS

SA127–02

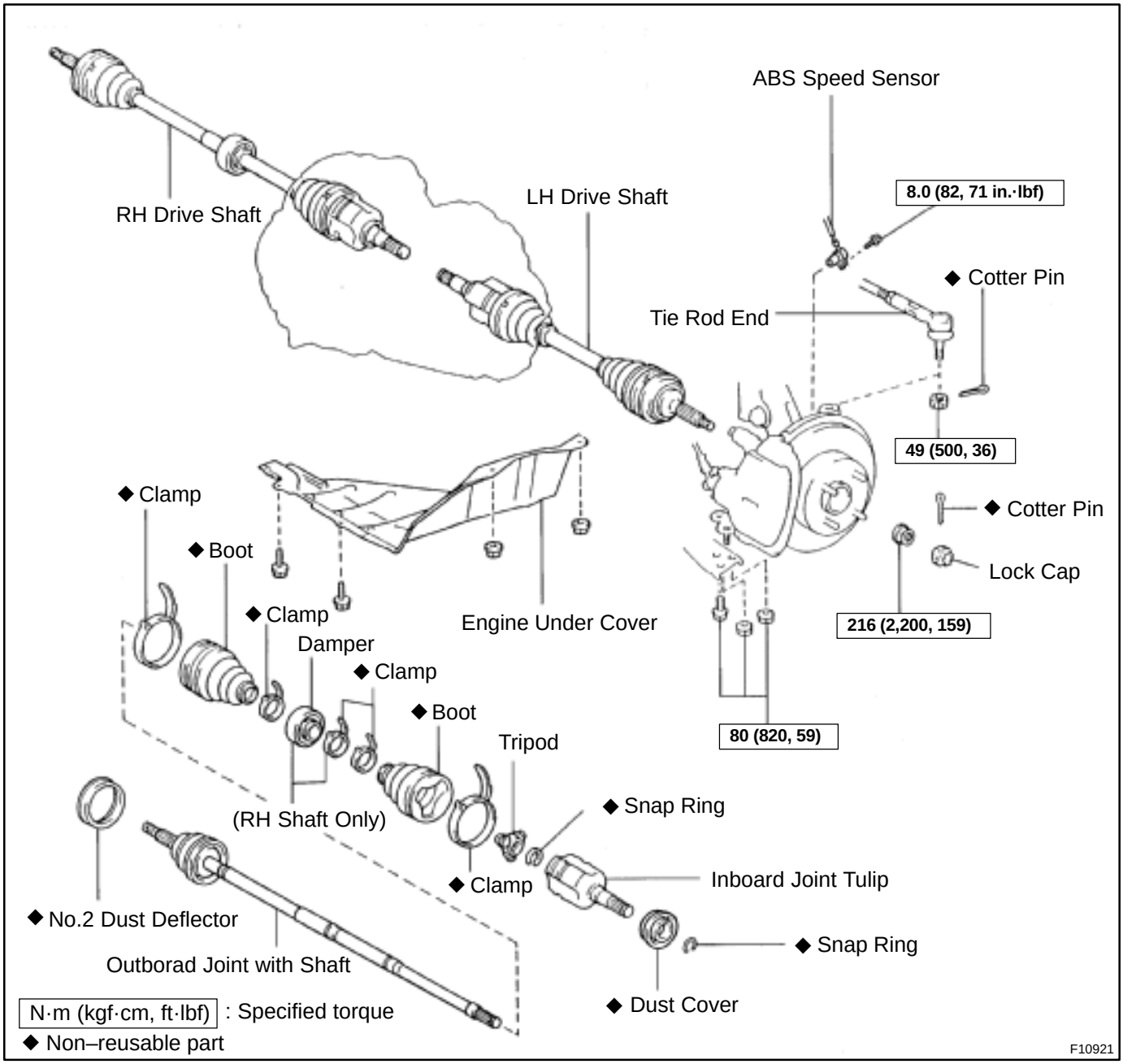

SA129–04

DISASSEMBLY

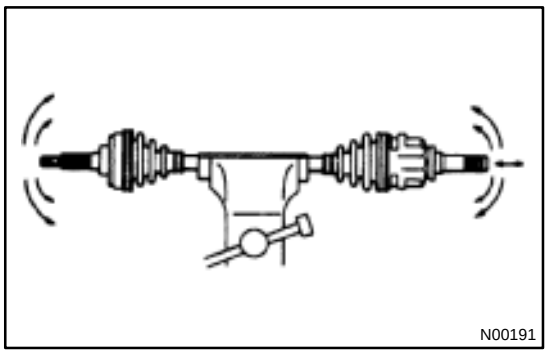
N00191

1. CHECK DRIVE SHAFT

(a) Check to see that there is no play in the outboard joint.

(b) Check to see that the inboard joint slides smoothly in the thrust direction.

(c) Check to see that there is no remarkable play in the radial direction of the inboard joint.

2. REMOVE INBOARD JOINT SHAFT

(a) Using a screwdriver, remove the 2 boot clamps.

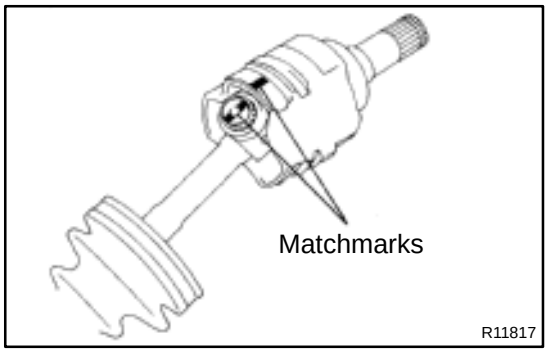

R11817

(b) Place matchmarks on the inboard joint tulip and tripod.

(c) Remove the inboard joint tulip from the outboard joint shaft.

3. REMOVE TRIPOD

(a) Using a snap ring expander, remove the snap ring.

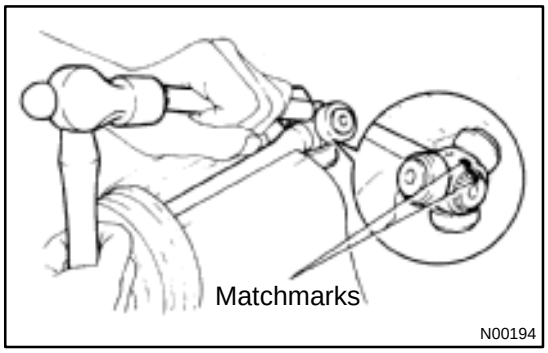

N00194

(b) Place matchmarks on the drive shaft and tripod.

(c) Using a brass bar and hammer, remove the tripod from the drive shaft.

4. REMOVE INBOARD JOINT BOOT AND 2 BOOT CLAMPS

5. RH DRIVE SHAFT:
REMOVE DYNAMIC DAMPER

(a) Using a screwdriver, remove the damper clamp.

(b) Remove the damper from the outboard joint shaft.

6. REMOVE OUTBOARD JOINT BOOT

(a) Using a screwdriver, remove the 2 boot clamps.

(b) Remove the outboard joint boot from the outboard joint.

NOTICE:

Do not disassemble the outboard joint.

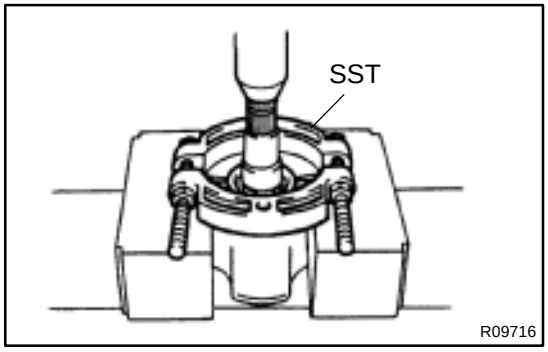

R09716

7. REMOVE DUST COVER

Using SST and a press, remove the dust cover from the inboard joint tulip.

SST 09950–00020

8. w/o ABS:
REMOVE NO.2 DUST DEFLECTOR

(a) Mount the outboard joint in a soft jaw vise.

(b) Using a screwdriver, remove the No.2 dust deflector.

SA12B–01

INSTALLATION

Installation is in the reverse order of removal (See page SA–18).

AFTER INSTALLATION, CHECK ABS SPEED SENSOR SIGNAL (See page DI–173) AND FRONT WHEEL ALIGNMENT (See page SA–4)

SA12A–03

REASSEMBLY

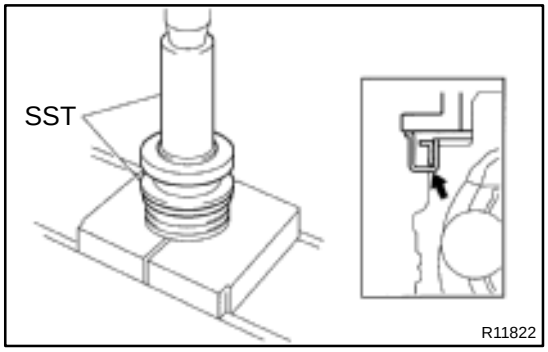

1. w/o ABS:

INSTALL NO.2 DUST DEFLECTOR

Using SST and a press, install a new No.2 dust deflector.

SST 09309–36010, 09316–20011

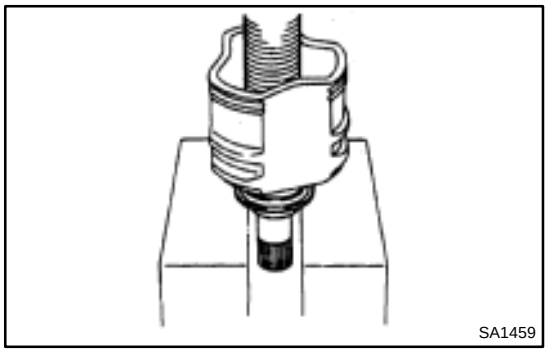

2. INSTALL DUST COVER

Using a press, install a new dust cover to the inboard joint tulip.

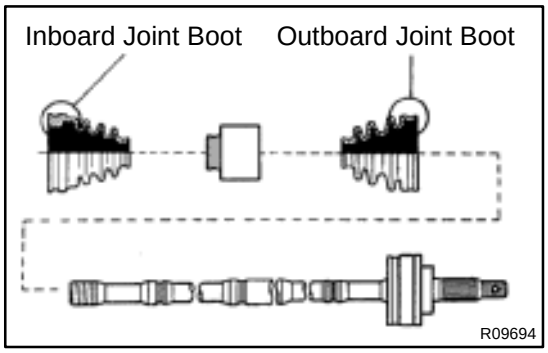

3. TEMPORARILY INSTALL BOOTS, CLAMPS AND DAMPER (RH DRIVE SHAFT)

HINT:

Before installing the boots (and damper), wrap the spline of the outboard joint shaft with vinyl tape to prevent them from being damaged.

(a) Temporarily install a new outboard joint boot.

(b) RH drive shaft:
Temporarily install the damper.

(c) Temporarily install a new inboard joint boot.

4. INSTALL TRIPOD

(a) Place the beveled side of the tripod axial spline toward the outboard joint.

(b) Align the matchmarks as they were placed before disassembly

(c) Using a brass bar and hammer, tap in the tripod to the drive shaft.

NOTICE:

Do not tap the roller.

(d) Using a snap ring expander, install a new snap ring.

5. INSTALL BOOT TO OUTBOARD JOINT

Before assembling the boot, pack the outboard joint and boot with grease in the boot kit.

Grease capacity: (Color = Black)
100 – 110 g (3.5 – 3.9 oz.)

6. INSTALL INBOARD JOINT TO FRONT DRIVE SHAFT

(a) Pack the inboard joint and boot with grease in the boot kit.
Grease capacity: (Color = Yellow ocher)
140 – 150 g (4.9 – 5.3 oz.)

(b) Align the matchmarks as they were placed before disassembly
(c) Install the inboard joint tulip to the drive shaft.
(d) Temporarily install the boot to the inboard joint tulip.

7. ASSEMBLE BOOT CLAMPS TO BOTH BOOTS

(a) Make sure the 2 boots are on the shaft groove.

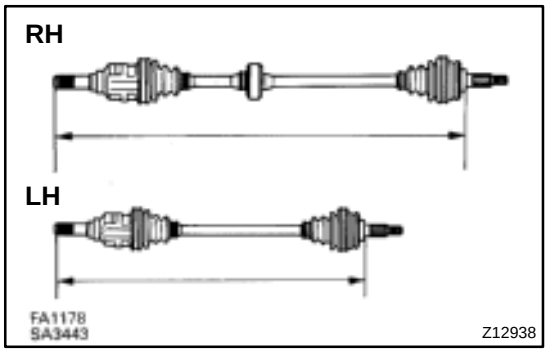

(b) Make sure that the 2 boots are not stretched or contracted when the drive shaft is at standard length.

Standard length

RH	784.4 ± 5.0 mm (30.882 ± 0.197 in.)
LH	554.1 ± 5.0 mm (21.815 ± 0.197 in.)

(c) Place the 4 new boot clamps to the boots.
(d) Bend the band, and lock it with a screwdriver.

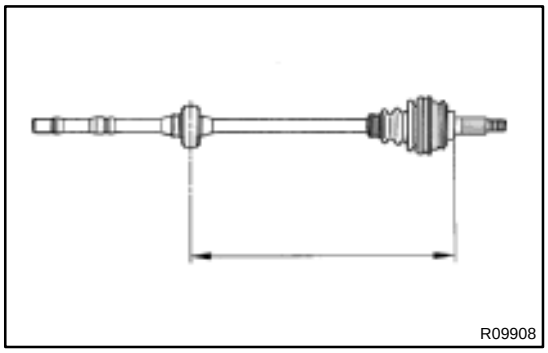

8. RH DRIVE SHAFT: ASSEMBLE DYNAMIC DAMPER CLAMP

(a) Be sure the damper is on the shaft groove.
(b) Set the distance, as shown in the illustration.
Distance: 415.6 ± 5.0 mm (16.362 ± 0.197 in.)
(c) Place a new damper clamp to the damper.
(d) Bend the band and lock it in the same procedure for the boot clamp assembly.

9. CHECK DRIVE SHAFT (See page SA–20)

SA128–01

REMOVAL

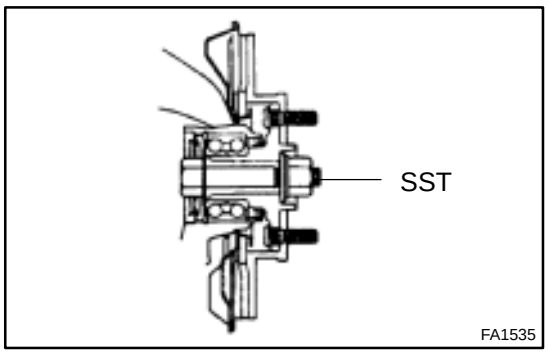

NOTICE:

- **The hub bearing could be damaged if it is subjected to the vehicle weight, such as when moving the vehicle with the drive shaft removed. Therefore, if it is absolutely necessary to place the vehicle weight on the hub bearing, first support it with SST.**
  SST 09608–16042 (09608–02021, 09608–02041)
- **w/ ABS:**
  After disconnecting the drive shaft from the axle hub, work carefully so as not to damage the sensor rotor serrations on the drive shaft.

1. REMOVE FRONT WHEEL
Torque: 103 N·m (1,050 kgf·cm, 76 ft·lbf)

2. M/T:
REMOVE LH ENGINE UNDER COVER

3. DRAIN TRANSAXLE OIL (M/T) OR ATF (A/T)

4. w/ ABS:
REMOVE BOLT AND ABS SPEED SENSOR
Torque: 8.0 N·m (82 kgf·cm, 71 in.·lbf)

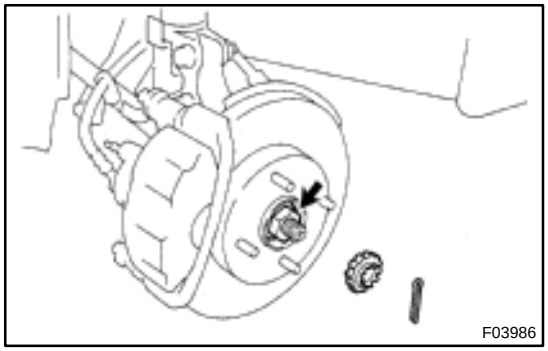

5. REMOVE DRIVE SHAFT LOCK NUT
(a) Remove the cotter pin and lock cap.
(b) While applying the brakes, remove the nut.
Torque: 216 N·m (2,200 kgf·cm, 159 ft·lbf)

6. DISCONNECT TIE ROD END FROM STEERING KNUCKLE (See page SA–10)

7. DISCONNECT LOWER BALL JOINT FROM LOWER SUSPENSION ARM (See page SA–10)

8. DISCONNECT DRIVE SHAFT FROM AXLE HUB

NOTICE:
Be careful not to damage the drive shaft boot and inner oil seal.

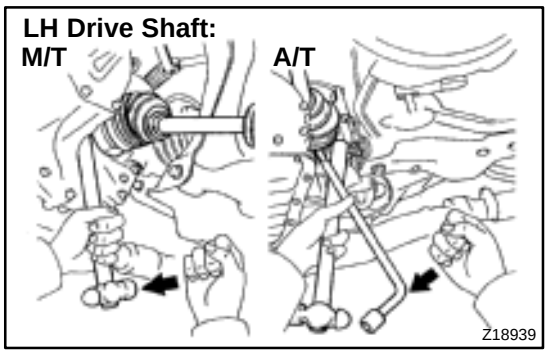

9. LH drive shaft:
REMOVE DRIVE SHAFT

(a) M/T:
Using a hammer, remove the drive shaft.

(b) A/T:
Using a hammer and hub nut wrench or an equivalent, remove the drive shaft.

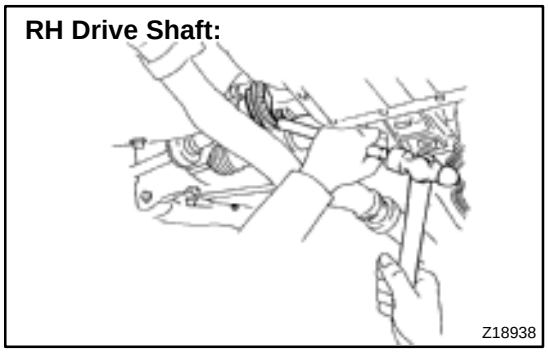

10. RH drive shaft:
REMOVE DRIVE SHAFT

Using a brass bar and hammer, remove the drive shaft.

11. REMOVE SNAP RING

Using a screwdriver, remove the snap ring from the inboard joint shaft.

FRONT LOWER BALL JOINT

COMPONENTS

SA11J–03

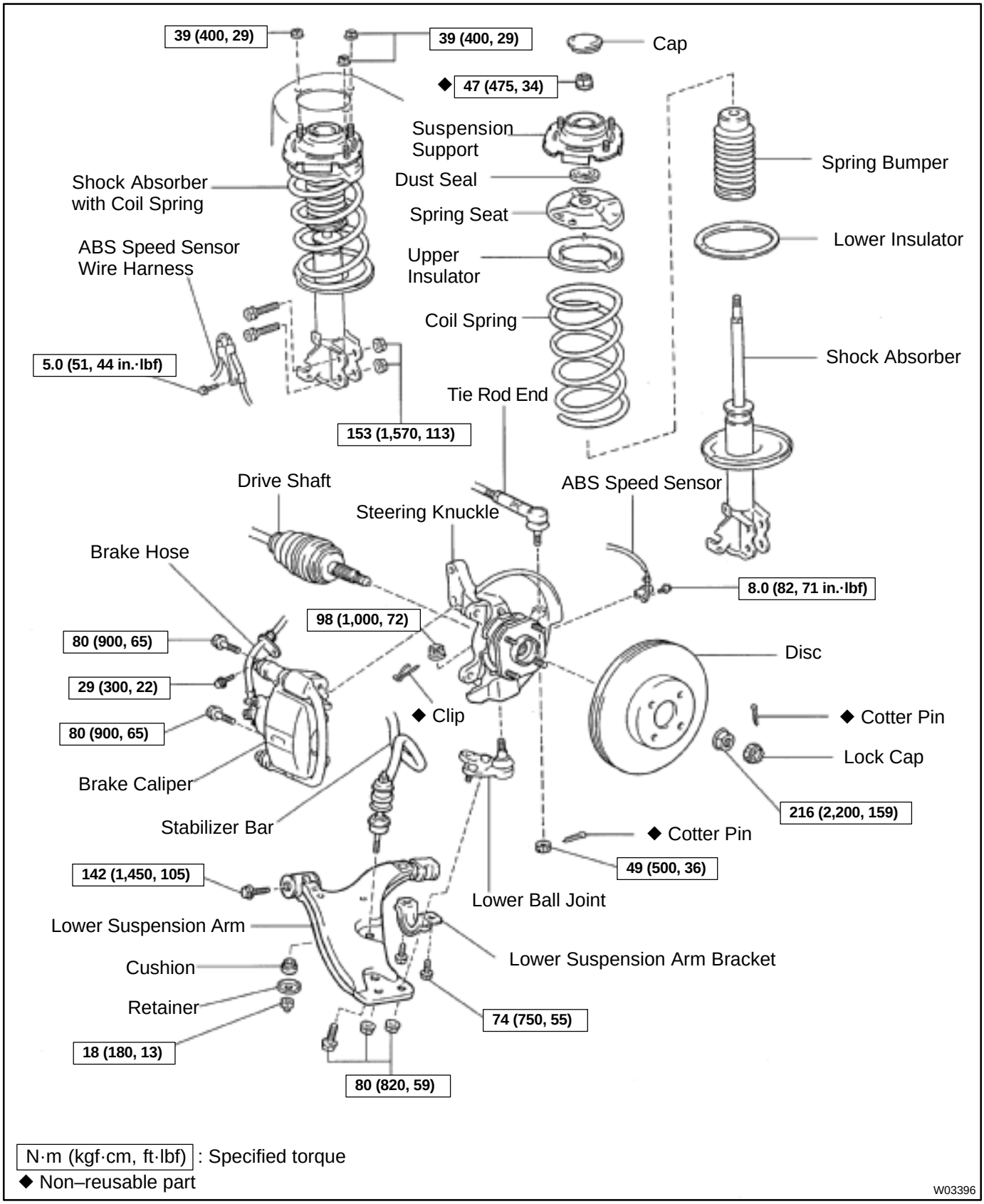

N·m (kgf·cm, ft·lbf) : Specified torque
◆ Non–reusable part

W03396

SA11L–03

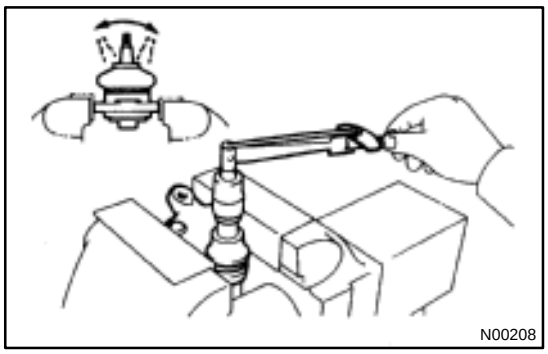

INSPECTION

INSPECT LOWER BALL JOINT FOR ROTATION CONDITION

(a) As shown in the illustration, flip the ball joint stud back and forth 5 times, before installing the nut.

(b) Using a torque wrench, turn the nut continuously one turn per 2 – 4 seconds and take the torque reading on the 5th turn.

Turning torque:
0.8 – 2.5 N·m (8 – 25 kgf·cm, 7.0 – 22.0 in.·lbf)

SA11M–01

INSTALLATION

Installation is in the reverse order of removal (See page SA–35).

AFTER INSTALLATION, CHECK ABS SPEED SENSOR SIGNAL (See page DI–173) AND FRONT WHEEL ALIGNMENT (See page SA–4)

SA11K–01

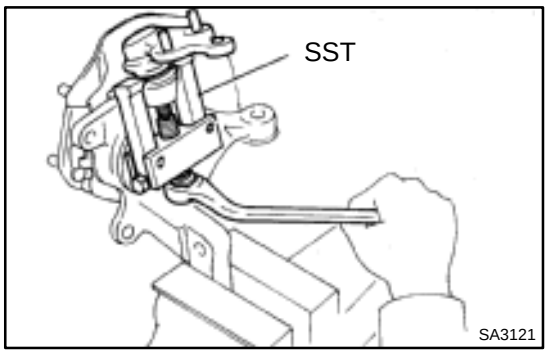

REMOVAL

1. REMOVE STEERING KNUCKLE WITH AXLE HUB (See page SA–10)

2. REMOVE LOWER BALL JOINT

(a) Remove the clip and nut.
Torque: 98 N·m (1,000 kgf·cm, 72 ft·lbf)

(b) Using SST, remove the lower ball joint.
SST 09628–62011

FRONT LOWER SUSPENSION ARM

SA11G–02

COMPONENTS

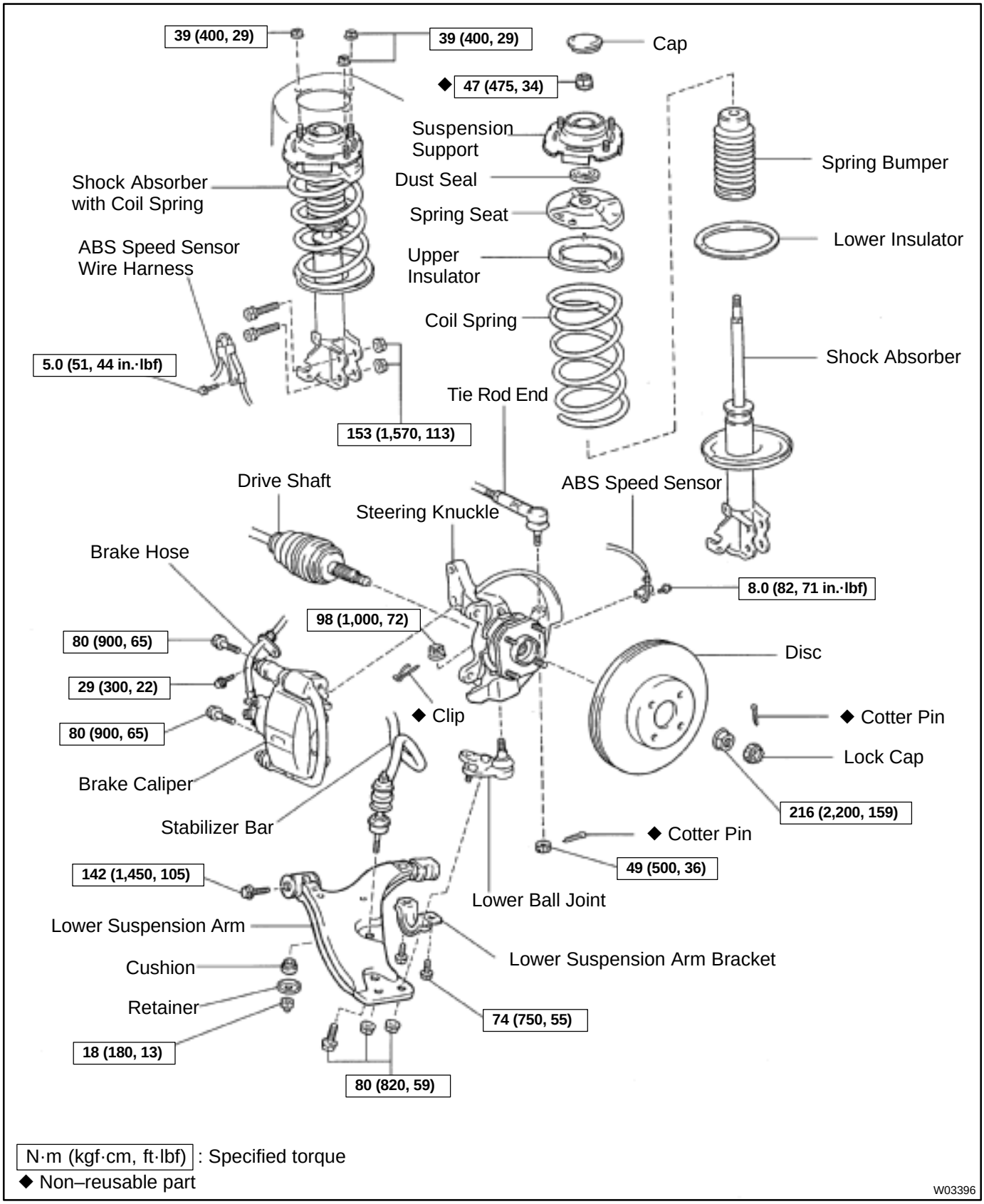

N·m (kgf·cm, ft·lbf) : Specified torque
◆ Non–reusable part

W03396

SA11I–01

INSTALLATION

Installation is in the reverse order of removal (See page SA–32).

AFTER INSTALLATION, CHECK FRONT WHEEL ALIGNMENT (See page SA–4)

SA11H–03

REMOVAL

1. REMOVE FRONT WHEEL

Torque: 103 N·m (1,050 kgf·cm, 76 ft·lbf)

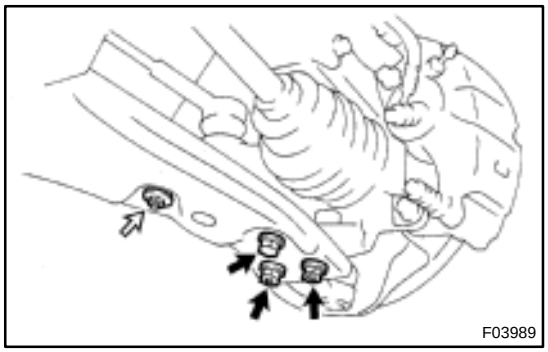

2. DISCONNECT LOWER SUSPENSION ARM FROM LOWER BALL JOINT

Remove the 2 nuts and bolt.

Torque: 80 N·m (820 kgf·cm, 59 ft·lbf)

3. DISCONNECT STABILIZER BAR BOLT FROM LOWER SUSPENSION ARM

Remove the nut, retainer and cushion.

Torque: 18 N·m (180 kgf·cm, 13 ft·lbf)

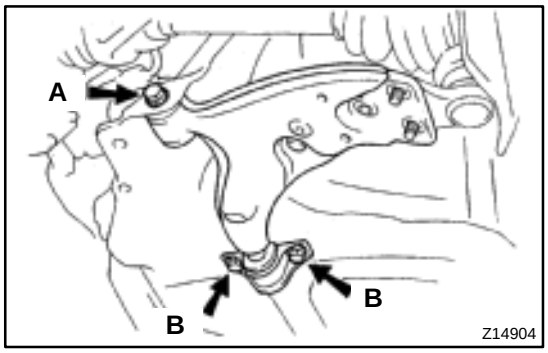

4. REMOVE LOWER SUSPENSION ARM

Remove the 3 bolts, lower suspension arm bracket and lower suspension arm.

Torque:

A: 142 N·m (1,450 kgf·cm, 105 ft·lbf)

B: 74 N·m (750 kgf·cm, 55 ft·lbf)

HINT:

At the time of installation, after stabilizing the suspension, torque the bolts.

FRONT SHOCK ABSORBER

SA119–03

COMPONENTS

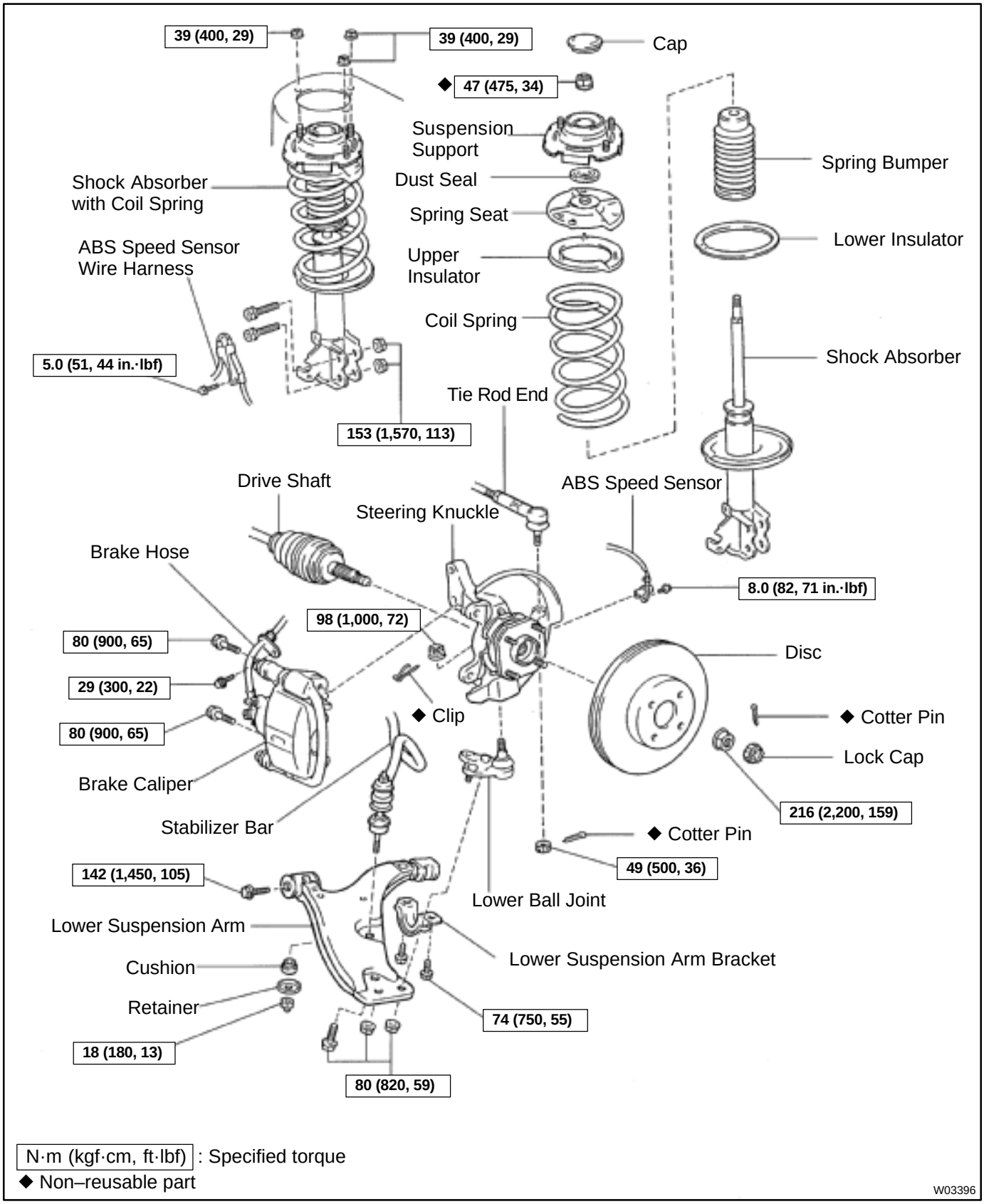

N·m (kgf·cm, ft·lbf) : Specified torque
◆ Non–reusable part

W03396

SA11B–01

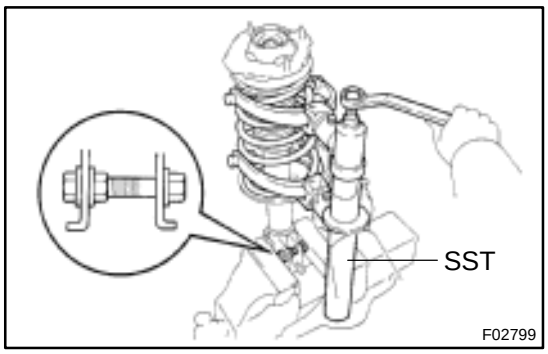

DISASSEMBLY

REMOVE COIL SPRING

(a) Using SST, compress the coil spring.
SST 09727–30021

NOTICE:

Do not use an impact wrench. It will damage the SST.

(b) Install 2 nuts and bolt to the bracket at the lower part of the shock absorber and secure it in a vise.
(c) Remove the lock nut in the center of the suspension support.
(d) Remove the suspension support.
(e) Remove the dust seal.
(f) Remove the spring seat.
(g) Remove the upper insulator.
(h) Remove the coil spring.
(i) Remove the spring bumper.
(j) Remove the lower insulator.

SA11D–01

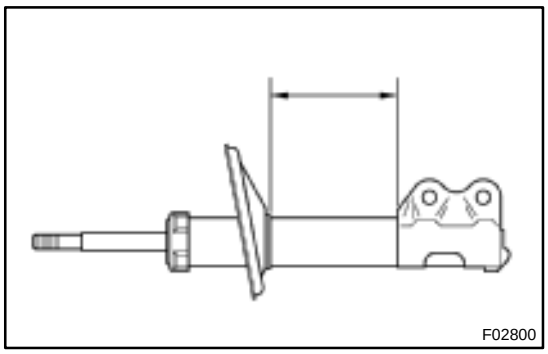

DISPOSAL

1. FULLY EXTEND SHOCK ABSORBER ROD

2. DRILL HOLE TO DISCHARGE GAS FROM CYLINDER

Using a drill, make a hole in the cylinder, as shown in the illustration to discharge the gas inside.

CAUTION:

The discharging gas is harmless, but be careful of chips which may fly up when drilling.

SA11C–01

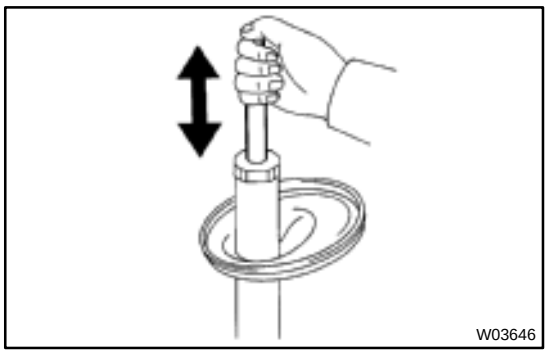

INSPECTION

INSPECT SHOCK ABSORBER

Compress and extend the shock absorber rod and check that there is no abnormal resistance or unusual operation sound.

If there is any abnormality, replace the shock absorber with a new one.

NOTICE:

When disposing of the shock absorber, see DISPOSAL on page SA–28.

SA11F–01

INSTALLATION

Installation is in the reverse order of removal (See page SA–25).

AFTER INSTALLATION, CHECK FRONT WHEEL ALIGNMENT (See page SA–4)

SA11E–01

REASSEMBLY

1. INSTALL LOWER INSULATOR ONTO SHOCK ABSORBER

2. INSTALL COIL SPRING AND SUSPENSION SUPPORT

(a) Using SST, compress the coil spring.
SST 09727–30021

NOTICE:

Do not use an impact wrench. It will damage the SST.

(b) Install the spring bumper to the piston rod.

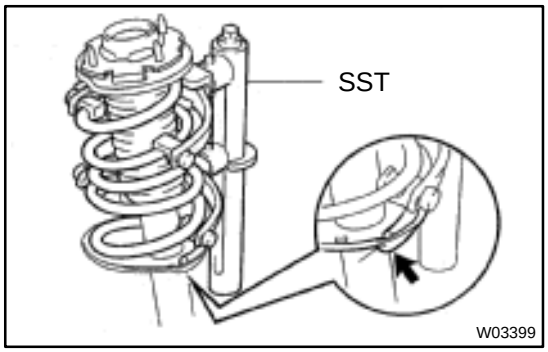

(c) Install the coil spring to the shock absorber.

HINT:

Fit the lower end of the coil spring into the gap of the spring seat of shock absorber.

(d) Install the spring seat with the upper insulator.

(e) Install the dust seal and suspension support.

(f) Temporality install a new nut in the center of the suspension support.

(g) Remove the SST.
SST 09727–30021

(h) Pack the suspension support with MP grease.

SA11A–02

REMOVAL

1. REMOVE FRONT WHEEL

Torque: 103 N·m (1,050 kgf·cm, 76 ft·lbf)

2. REMOVE FLEXIBLE HOSE

Remove the bolt and disconnect the flexible hose from the shock absorber.

Torque: 29 N·m (300 kgf·cm, 22 ft·lbf)

3. w/ ABS:

DISCONNECT ABS SPEED SENSOR WIRE HARNESS

Remove the bolt and disconnect the ABS speed sensor wire harness from the shock absorber.

Torque: 5.0 N·m (55 kgf·cm, 48 in.·lbf)

4. REMOVE SHOCK ABSORBER WITH COIL SPRING

(a) Loosen the 2 nuts on the lower side of shock absorber.

Torque: 153 N·m (1,570 kgf·cm, 113 ft·lbf)

HINT:

Do not remove the bolts.

(b) Remove the cap from the suspension support.

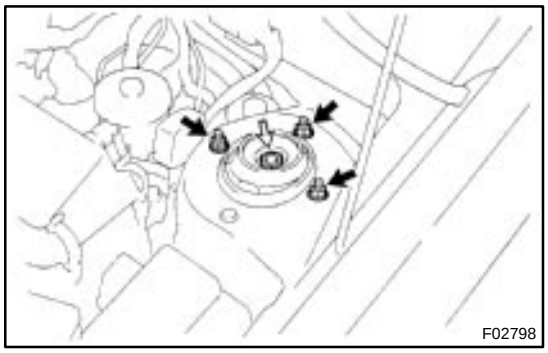

(c) Loosen the lock nut in the center of the suspension support.

NOTICE:

Do not remove the nut.

Torque: 47 N·m (475 kgf·cm, 34 ft·lbf)

(d) Remove the 3 nuts on the upper side of the shock absorber.

Torque: 39 N·m (400 kgf·cm, 29 ft·lbf)

(e) Remove the 2 nuts and bolts on the lower side of shock absorber.

HINT:

At the time of installation, coat the nut's thread with engine oil.

(f) Remove the shock absorber with the coil spring.

FRONT STABILIZER BAR

SA11N–01

COMPONENTS

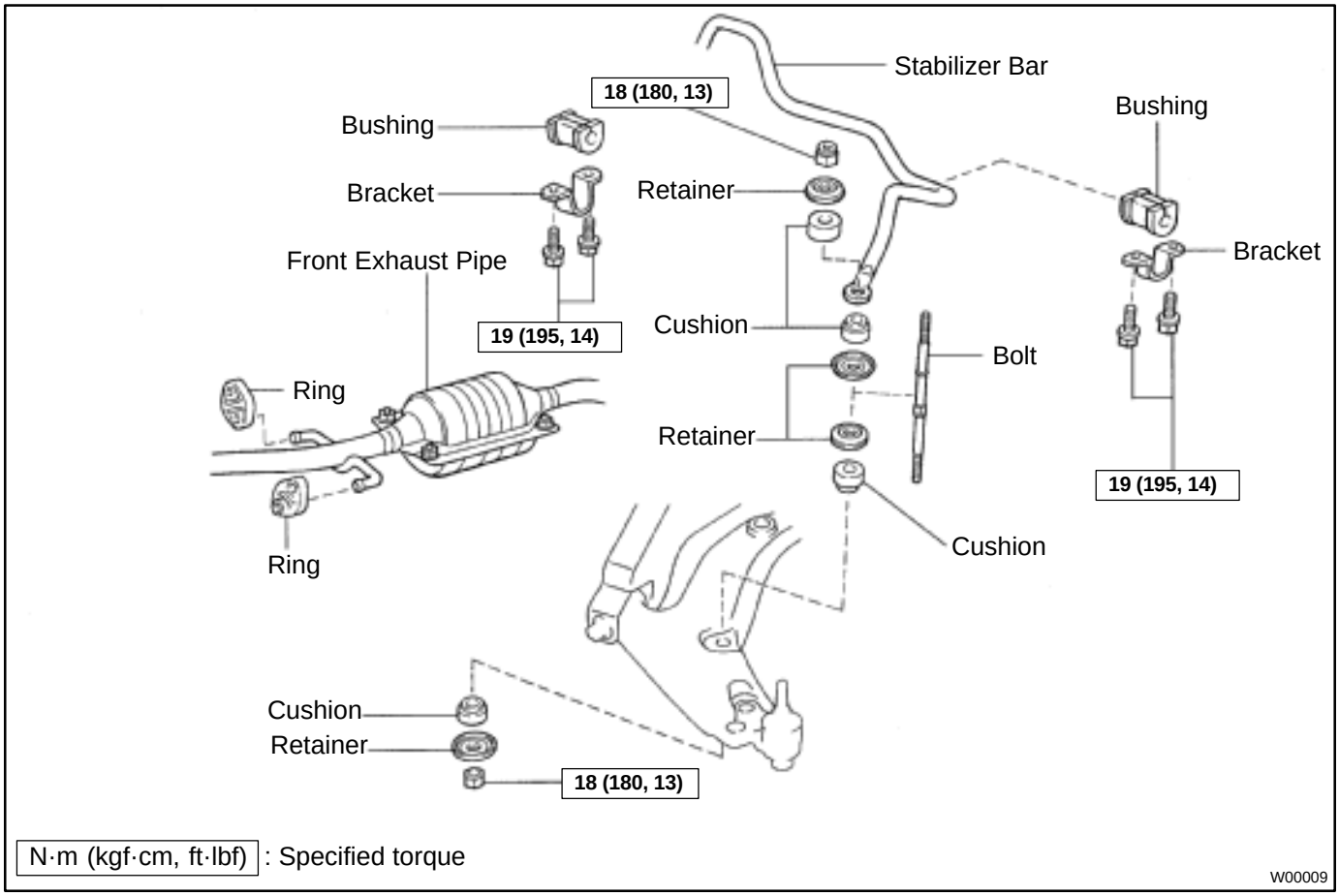

N·m (kgf·cm, ft·lbf) : Specified torque

W00009

SA11O–01

INSTALLATION

Installation is in the reverse order of removal (See page SA–39).

SA11P–01

REMOVAL

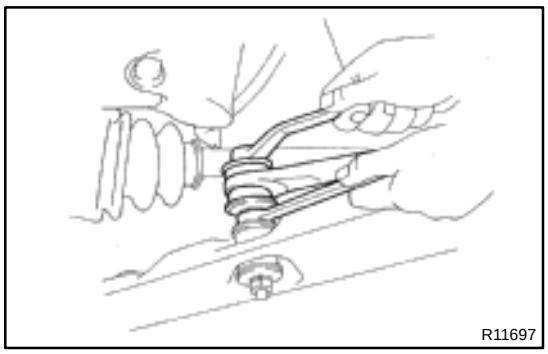
R11697

1. DISCONNECT STABILIZER BAR FROM LOWER SUSPENSION ARMS

(a) While holding the bolt, loosen the nut.
Torque: 18 N·m (180 kgf·cm, 13 ft·lbf)

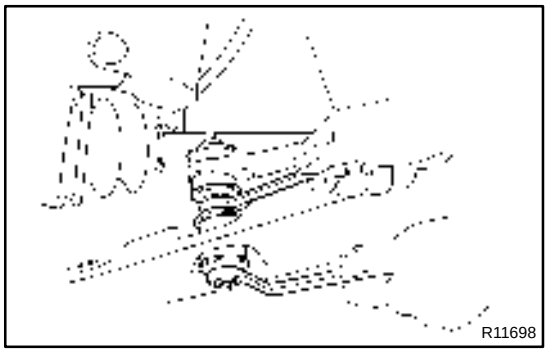
R11698

(b) While holding the bolt, remove the nut, retainers and cushions.
Torque: 18 N·m (180 kgf·cm, 13 ft·lbf)

(c) Employ the same manner described above to the other side.

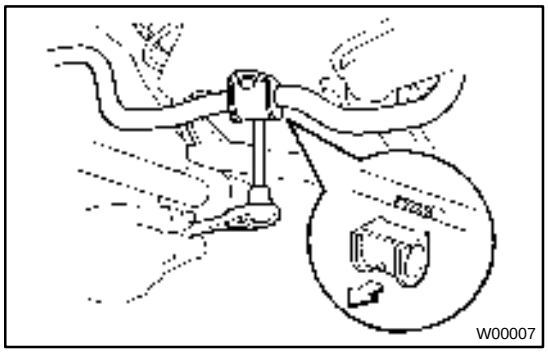
W00007

2. REMOVE 2 BRACKETS AND BUSHINGS FROM STABILIZER BAR

Remove 4 bolts, 2 brackets and bushings.
Torque: 19 N·m (195 kgf·cm, 14 ft·lbf)

HINT:
At the time of installation, install the bushing on the paint line on the stabilizer bar.

3. DISCONNECT FRONT EXHAUST PIPE FROM RINGS

4. REMOVE STABILIZER BAR

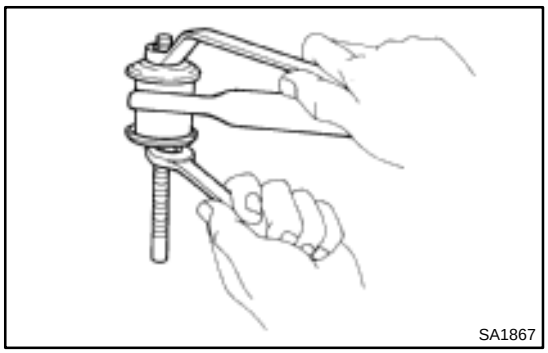
SA1867

5. REMOVE 2 NUTS, 4 RETAINERS, 4 CUSHIONS AND 2 BOLTS FROM STABILIZER BAR

(a) Remove the stabilizer bar nut.

(b) Remove the 2 retainers, cushions and bolt.

(c) Employ the same manner described above to the other side.

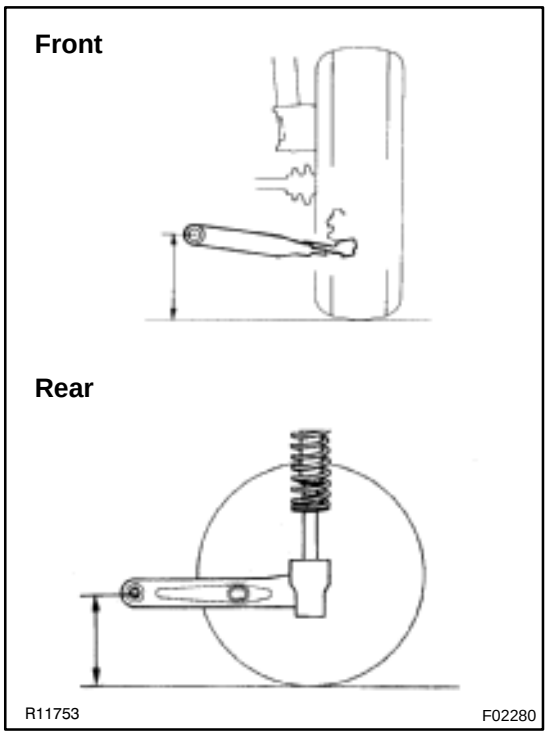

FRONT WHEEL ALIGNMENT

SA13W–02

INSPECTION

1. MEASURE VEHICLE HEIGHT

Tire size	Front*1	Rear*2
185/60R14	188 mm (7.40 in.)	249 mm (9.80 in.)

*1: Front measuring point
Measure the distance from the ground to the center of the lower suspension arm front mounting bolt.
*2: Rear measuring point
Measure the distance from the ground to the center of the axle beam mounting bolt.

NOTICE:

Before inspecting the wheel alignment, adjust the vehicle height to the specification.

If the vehicle height is not the specification, try to adjust it by pushing down on or lifting the body.

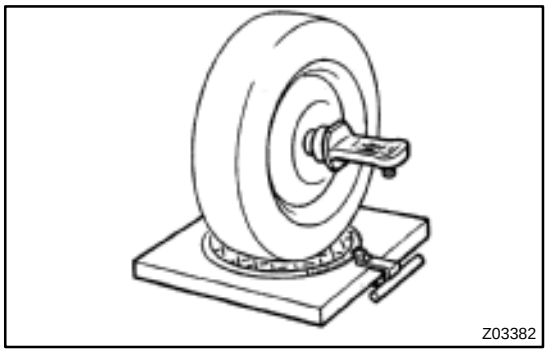

2. INSTALL CAMBER–CASTER–KINGPIN GAUGE OR POSITION VEHICLE ON WHEEL ALIGNMENT TESTER

Follow the specific instruction of the equipment manufacturer.

3. INSPECT CAMBER, CASTER AND STEERING AXIS INCLINATION

Camber	–0˚25' ± 45' (–0.42˚ ± 0.75˚)
Left–right error	45' (0.75˚) or less
Caster	1˚30' ± 45' (1.5˚ ± 0.75˚)
Left–right error	45' (0.75˚) or less
Steering axis inclination	12˚15' ± 45' (12.25˚ ± 0.75˚)
Left–right error	45' (0.75˚) or less

HINT:

If the caster and steering axis inclination are not within the specification, after the camber has been correctly adjusted, recheck the suspension parts for damaged and/or worn out parts.

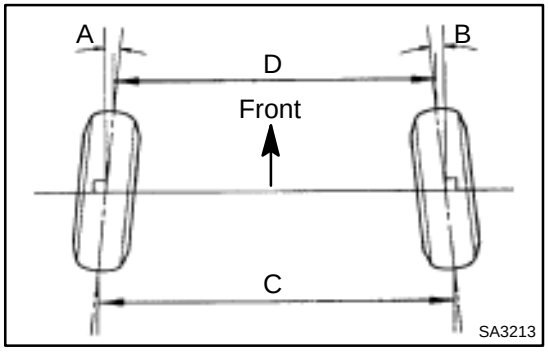

4. INSPECT TOE–IN

Toe–in (total)	A + B: 0˚06' ± 12' (0.1˚ ± 0.2˚)
	C – D: 1 ± 2 mm (0.04 ± 0.08 in.)

If the toe–in is not within the specification, adjust it at the rack ends.

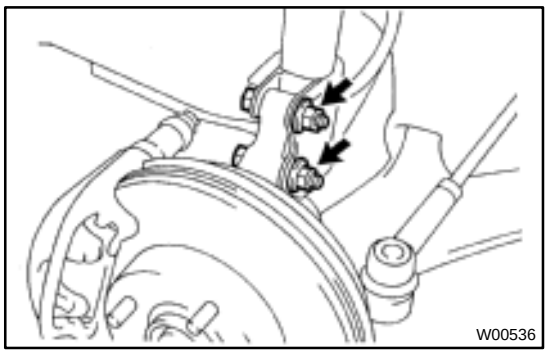

5. ADJUST CAMBER

NOTICE:

After the camber has been adjusted, inspect the toe–in.

(a) Remove the front wheels.

(b) Remove the 2 nuts on the lower side of the shock absorber.

(c) Coat the threads of the nuts with engine oil.

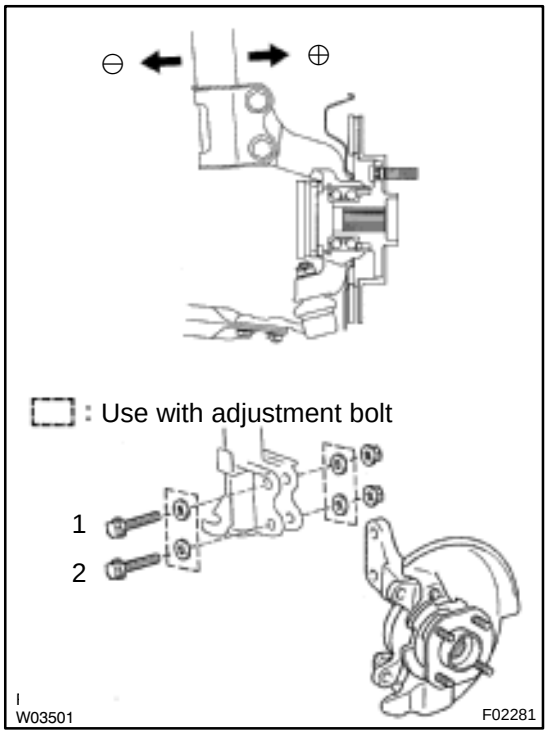

(d) Temporarily install the 2 nuts.

(e) Adjust the camber by pushing or pulling the lower side of the shock absorber in the direction in which the camber adjustment is required.

(f) Tighten the nuts.

Torque: 153 N·m (1,570 kgf·cm, 113 ft·lbf)

(g) Install the front wheels.

Torque: 103 N·m (1,050 kgf·cm, 76 ft·lbf)

(h) Check the camber.

HINT:

- Try to adjust the camber to the center value.
- Adjusting value for the set bolts is 6’ – 30’ (0.1˚ – 0.5˚).

If the camber is not within the specification, using the table below, estimate of how much additional camber adjustment will be required, and select the camber adjusting bolt.

NOTICE:

Tighten the adjusting bolt with a washer for the bolt side and for the nut side.

Bolt / Adjusting Value	Set Bolt		Adjusting Bolt					
	90105–15001		90105–15004		90105–15005		90105–15006	
			1 Dot 		2 Dots 		3 Dots 	
	1	2	1	2	1	2	1	2
15’	●			●				
30’	●					●		
45’	●							●
1˚00’			●					●
1˚15’					●			●
1˚30’							●	●

F01195

(i) Follow the above mentioned steps again. Between step (b) and (c), exchange 1 or 2 selected bolts.

HINT:

When exchanging the 2 bolts, exchange 1 bolt for each time.

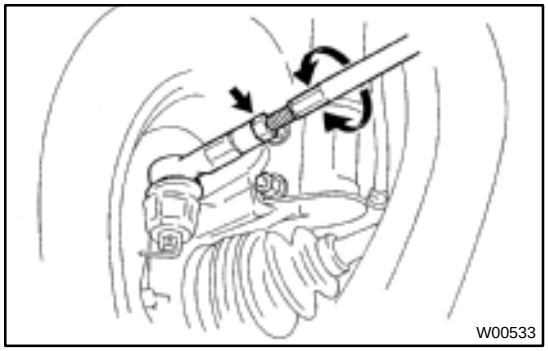

W00533

6. ADJUST TOE–IN

(a) Remove the boot clamps.

(b) Loosen the tie rod end lock nuts.

(c) Turn the left and right rack ends an equal amount to adjust the toe–in.

HINT:

- Try to adjust the toe–in to the center value.

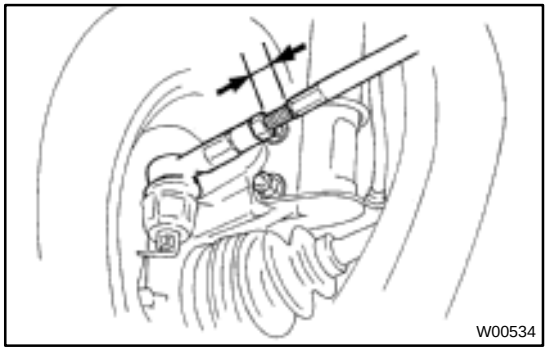

W00534

- Make sure that the lengths of the left and right rack ends are the same.

  Rack end length difference: 1.5 mm (0.059 in.) or less

(d) Torque the tie rod end lock nuts.

Torque: 47 N·m (480 kgf·cm, 35 ft·lbf)

(e) Place the boots on the seat and install the clamps to them.

HINT:

Make sure that the boots are not twisted.

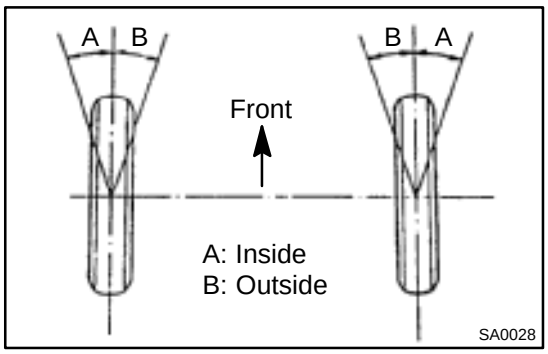

7. INSPECT WHEEL ANGLE

Turn the steering wheel fully, and measure the turning angle.

Inside wheel (Reference)	35˚45' ± 2˚ (35.75˚ ± 2˚)
Outside wheel (Reference)	32˚05' (32.08˚)

If the wheel angles differ from the standard specifications, inspect the toe–in.

FRONT WHEEL HUB BOLT

SA118–02

REPLACEMENT

1. REMOVE FRONT WHEEL

2. REMOVE BRAKE CALIPER AND DISC

(a) Remove the 2 bolts, brake caliper and disc.

(b) Support the brake caliper securely.

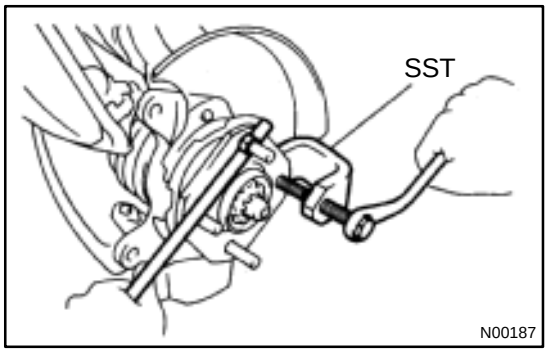

3. REMOVE HUB BOLT

Using SST, remove the hub bolt.

SST 09628–10011

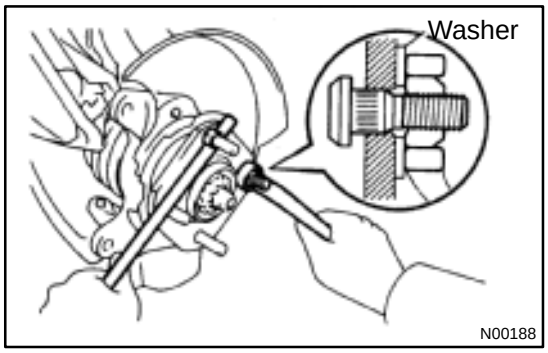

4. INSTALL HUB BOLT

Install washer and nut to the hub bolt, as shown in the illustration, and install the hub bolt with torquing the nut.

5. INSTALL DISC AND BRAKE CALIPER

Install the disc, brake caliper and 2 bolts.

Torque: 88 N·m (900 kgf·cm, 65 ft·lbf)

6. INSTALL FRONT WHEEL

Torque: 103 N·m (1,050 kgf·cm, 76 ft·lbf)

REAR AXLE BEAM

COMPONENTS

SA125–02

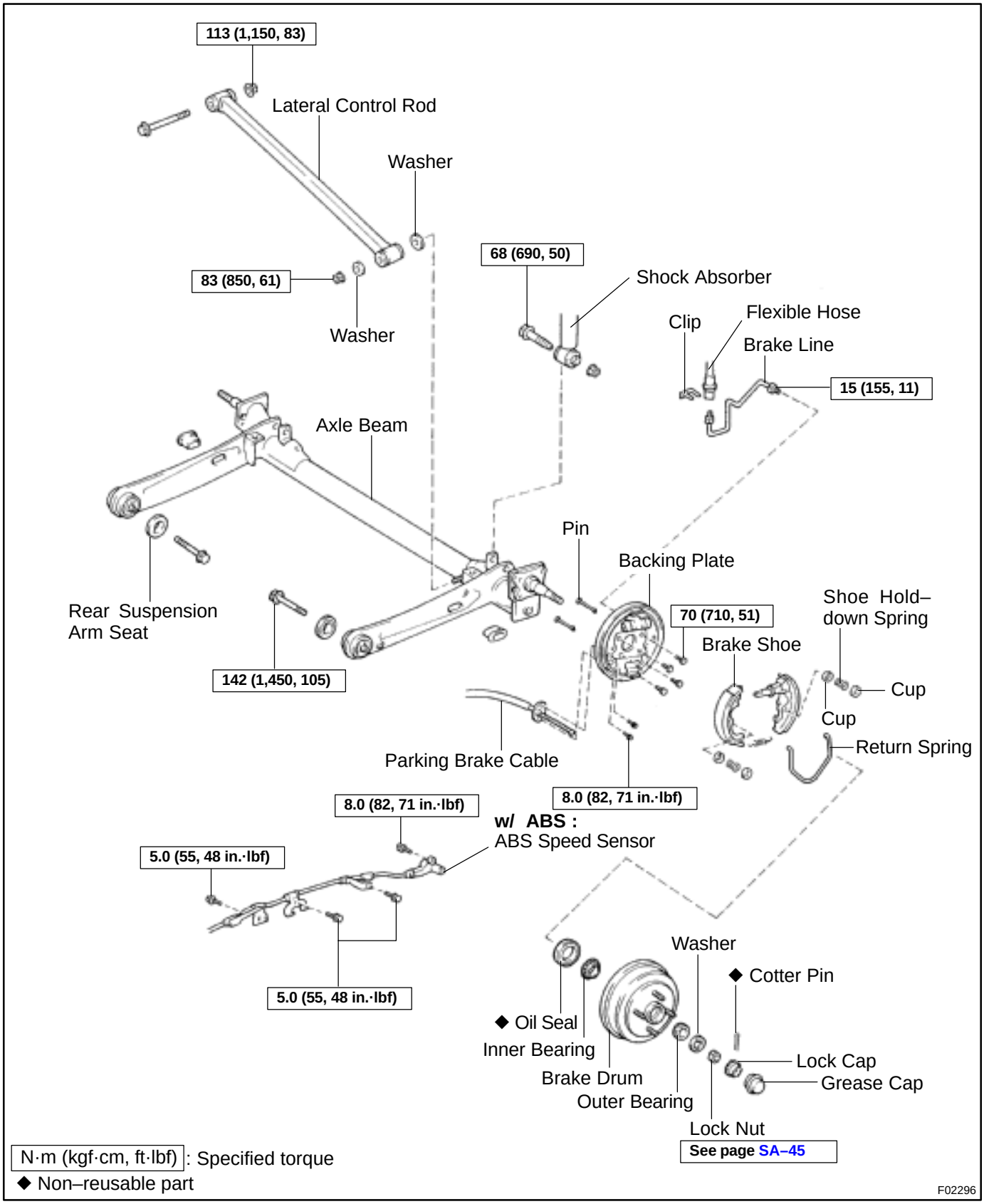

N·m (kgf·cm, ft·lbf) : Specified torque
◆ Non–reusable part

F02296

SA0QZ–01

INSTALLATION

Installation is in the reverse order of removal (See page SA–58).

AFTER INSTALLATION, BLEED BRAKE SYSTEM (See page BR–4) AND CHECK ABS SPEED SENSOR SIGNAL (See page DI–173)

SA126–03

REMOVAL

1. REMOVE REAR WHEELS

Torque: 103 N·m (1,050 kgf·cm, 76 ft·lbf)

2. REMOVE BRAKE DRUMS (See page SA–42)

3. REMOVE BRAKE SHOES (See page BR–29)

4. w/ ABS:

REMOVE ABS SPEED SENSOR

(a) Remove the bolt and ABS speed sensor.

Torque: 8.0 N·m (82 kgf·cm, 71 in.·lbf)

(b) Remove the 3 bolts and ABS speed sensor wire harness.

Torque: 5.0 N·m (55 kgf·cm, 48 in.·lbf)

5. DISCONNECT PARKING BRAKE CABLE FROM BACKING PLATE

Remove the 2 bolts and disconnect the parking brake cable from the backing plate.

Torque: 8.0 N·m (82 kgf·cm, 71 in.·lbf)

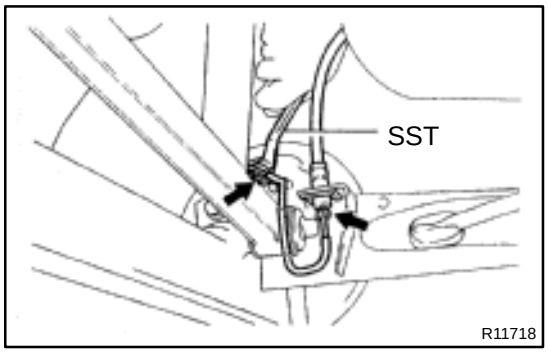

6. DISCONNECT BRAKE LINE

(a) Using SST, disconnect the brake line from the wheel cylinder.

SST 09751–36011

Torque: 15 N·m (155 kgf·cm, 11 ft·lbf)

(b) Remove the clip and disconnect the brake line from the axle beam.

7. REMOVE BACKING PLATE

Remove the 4 bolts and backing plate.

Torque: 70 N·m (710 kgf·cm, 51 ft·lbf)

8. REMOVE LATERAL CONTROL ROD

(a) Remove the nut and bolt, disconnect the lateral control rod from the body.

Torque: 113 N·m (1,150 kgf·cm, 83 ft·lbf)

HINT:

At the time of installation, after stabilizing the suspension, torque the nut.

(b) Remove the nut, washer and lateral control rod from the axle beam.

Torque: 83 N·m (850 kgf·cm, 61 ft·lbf)

HINT:

At the time of installation, after stabilizing the suspension, torque the nut.

9. DISCONNECT SHOCK ABSORBER FROM AXLE BEAM

(a) Using a jack, support the axle beam.

(b) Remove the bolt and nut on lower side of the shock absorber.

Torque: 68 N·m (690 kgf·cm, 50 ft·lbf)

HINT:
At the time of installation, after stabilizing the suspension, torque the bolts.

10. REMOVE AXLE BEAM

Remove the 2 bolts, rear suspension arm seats and axle beam.

Torque: 142 N·m (1,450 kgf·cm, 105 ft·lbf)

HINT:
At the time of installation, after stabilizing the suspension, torque the bolts.

REAR AXLE HUB

COMPONENTS

SA11Q–02

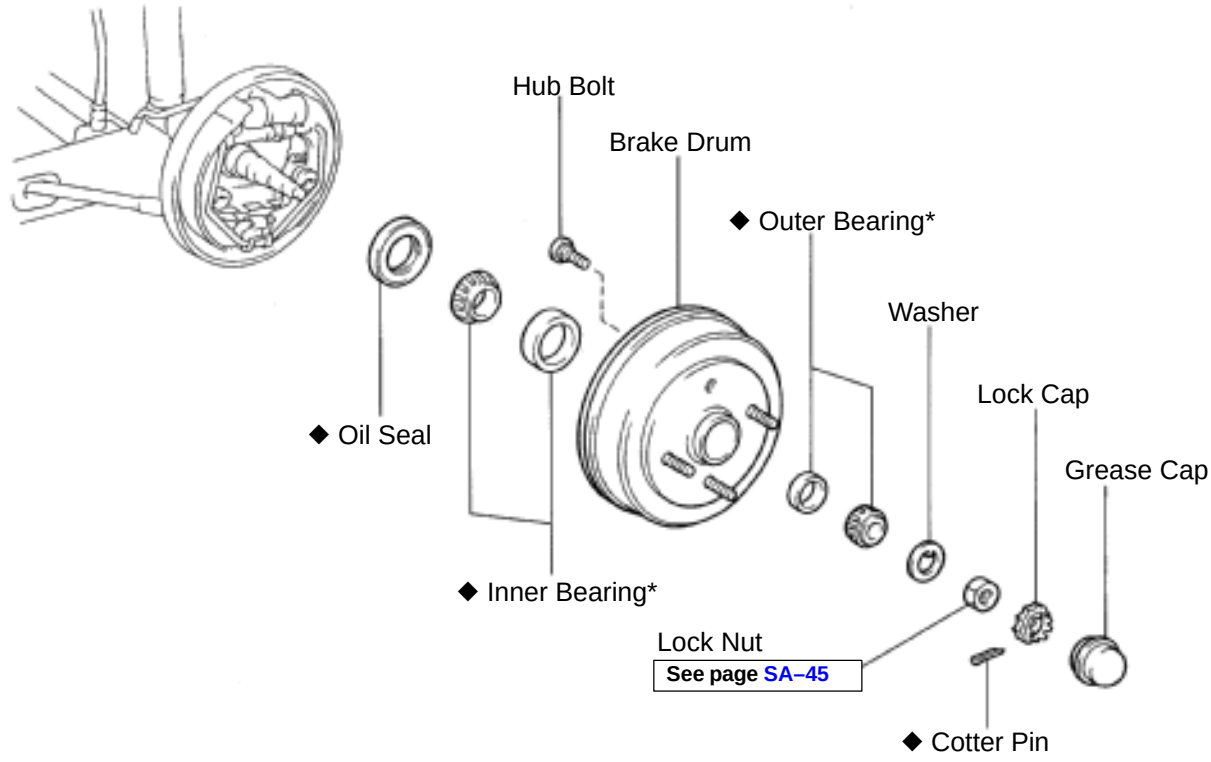

N·m (kgf·cm, ft·lbf) : Specified torque
◆ Non–reusable part

*: In case of removing the outer race of the bearing, it becomes the non–reusable part with a set of bearing.

Z18945

SA11S–01

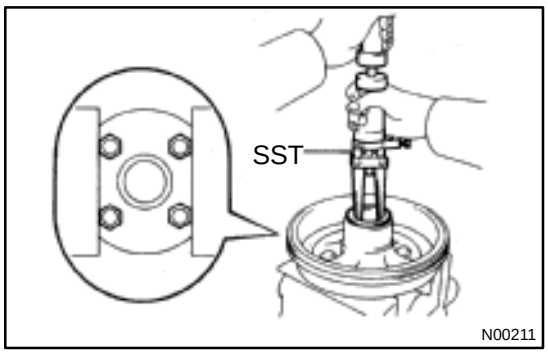

DISASSEMBLY

1. REMOVE OIL SEAL AND INNER BEARING

(a) Using SST, remove the oil seal.
SST 09308–00010

(b) Remove the inner bearing.

2. REMOVE OUTER RACES

Using a brass bar and hammer, remove the 2 outer races.

SA11U–03

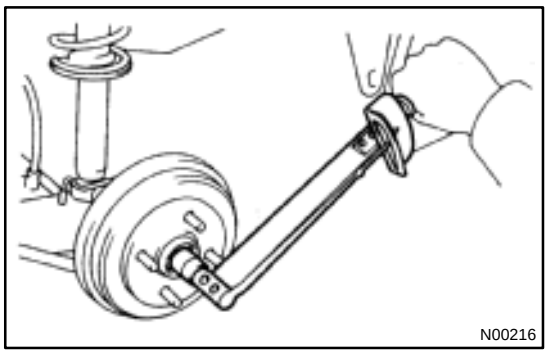

INSTALLATION

1. INSTALL REAR AXLE HUB

(a) Install the axle hub.

(b) Install the outer bearing and washer.

(c) Temporarily install the nut.

2. ADJUST BEARING PRELOAD

(a) Torque the nut.

Torque: 29 N·m (300 kgf·cm, 22 ft·lbf)

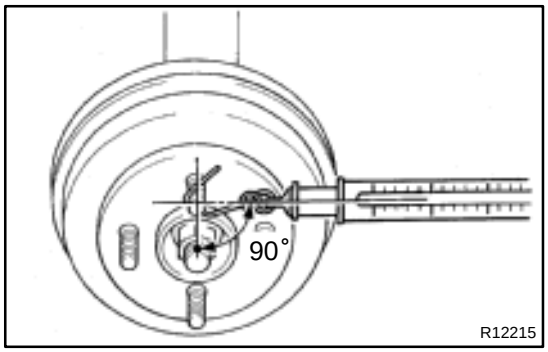

(b) Snug down the bearings by turning the axle hub several times.

(c) Loosen the nut until it can be turned by hand.

(d) Measure the rotation frictional force of the oil seal.

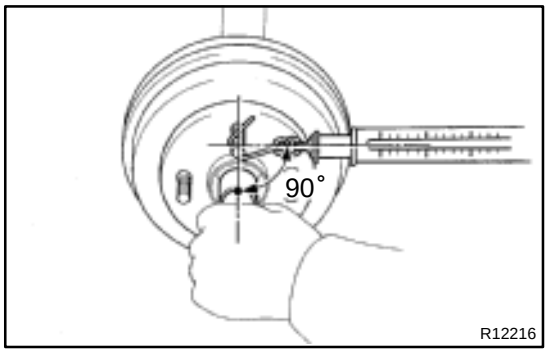

(e) Tighten the nut until the preload is within standard.

Preload (with turning):
Frictional force plus
0 – 11.8 N (0 – 1.2 kgf, 0 – 2.6 lbf)

(f) Install the lock cap and a new cotter pin.

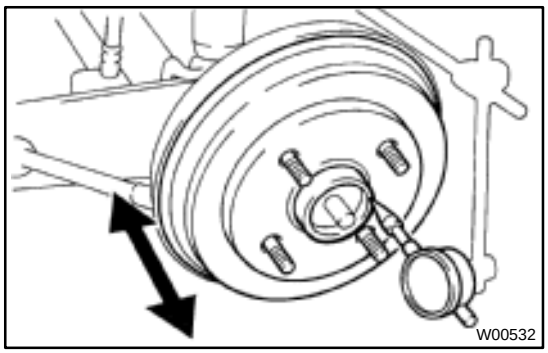

(g) Measure the hub axial play.

Axial play: 0.05 mm (0.0020 in.) or less

3. INSTALL GREASE CAP

Using a screwdriver and hammer, install the grease cap.

4. INSTALL REAR WHEEL

Torque: 103 N·m (1,050 kgf·cm, 76 ft·lbf)

SA11T–01

REASSEMBLY

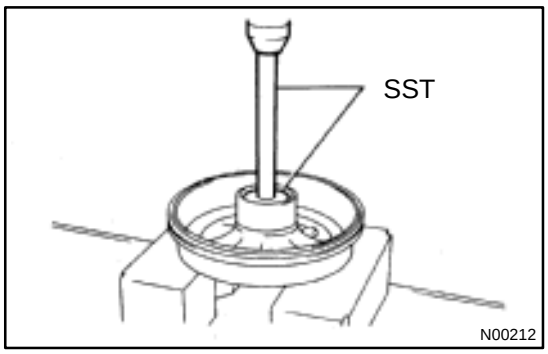

1. INSTALL NEW BEARING OUTER RACES

(a) Inside:
Using SST and a press, install new bearing outer race.
SST 09950–60010 (09951–00460), 09950–70010 (09951–07150)

(b) Outside:
Using SST and a press, install new bearing outer race.
SST 09550–10012 (09552–10010, 09553–10010)

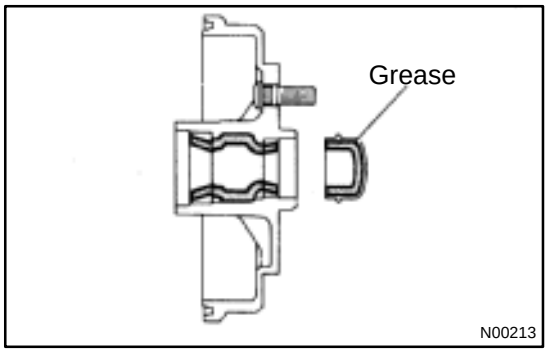

2. PACK BEARINGS WITH GREASE

(a) Prepare MP grease in the palm of your hand.

(b) Pack grease into the bearing, continuing until the grease oozes out from the other side.

(c) Do the same around the bearing circumference.

3. INSTALL OIL SEAL

(a) Pack the inside of the axle hub and grease cap with MP grease, as shown in the illustration.

(b) Install the inner bearing.

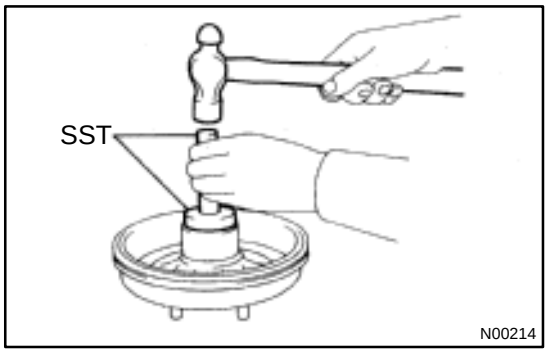

(c) Using SST and a hammer, install a new oil seal.
SST 09550–10012 (09552–10010, 09557–10010)

(d) Coat the oil seal lip with MP grease.

SA11R–01

REMOVAL

1. REMOVE REAR WHEEL

2. REMOVE GREASE CAP

Using a screwdriver and hammer, remove the grease cap.

3. REMOVE AXLE HUB

(a) Remove the cotter pin and lock cap.

(b) Remove the nut.

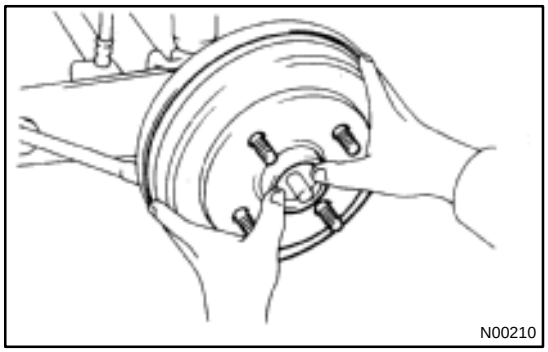
N00210

(c) Remove the brake drum with the axle hub.

NOTICE:

Be careful not to drop the outer bearing.

REAR LATERAL CONTROL ROD

COMPONENTS

SA122–01

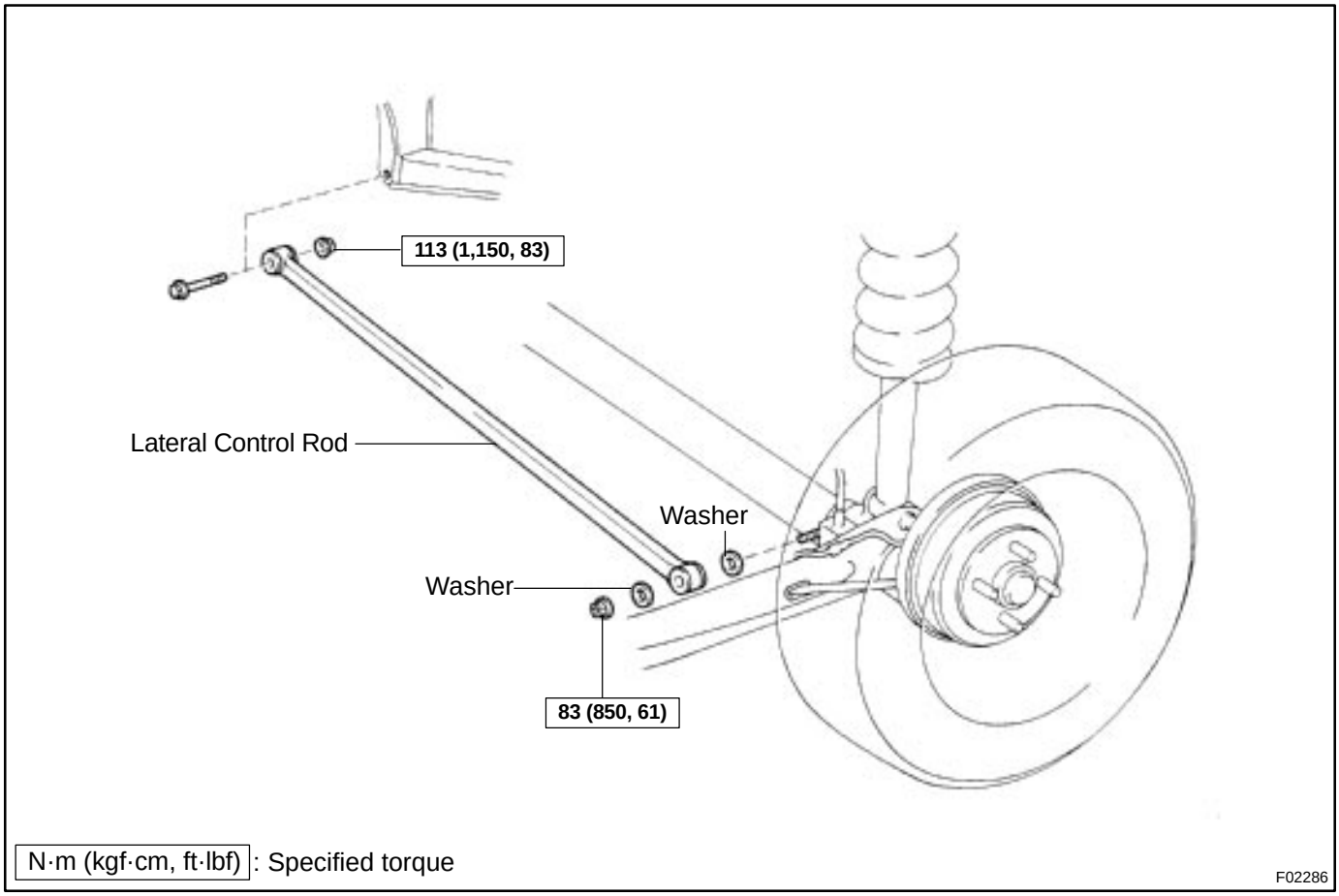

N·m (kgf·cm, ft·lbf): Specified torque

F02286

SA124–01

INSTALLATION

Installation is in the reverse order of removal (See page SA–55).

SA123–01

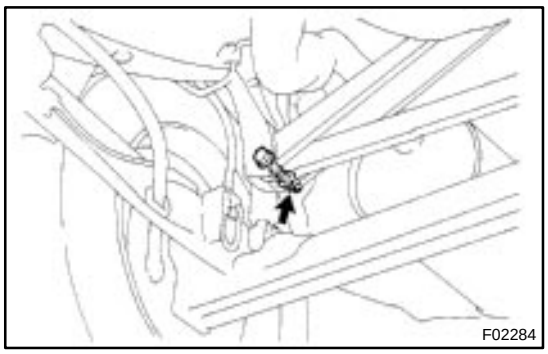
F02284

REMOVAL

REMOVE LATERAL CONTROL ROD

(a) Remove the nut and bolt and disconnect the lateral control rod from the body.

Torque: 113 N·m (1,150 kgf·cm, 83 ft·lbf)

HINT:

At the time of installation, after stabilizing the suspension, torque the nut.

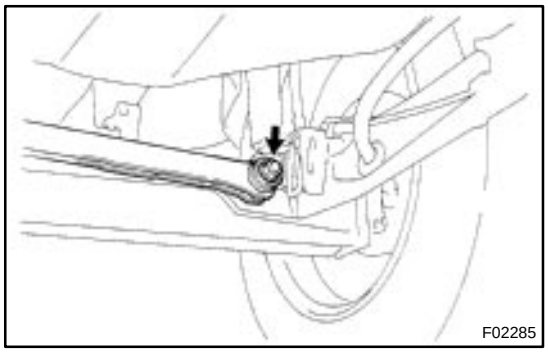
F02285

(b) Remove the nut, 2 washers and lateral control rod from the axle beam.

Torque: 83 N·m (850 kgf·cm, 61 ft·lbf)

HINT:

At the time of installation, after stabilizing the suspension, torque the nut.

REAR SHOCK ABSORBER

SA13X–01

COMPONENTS

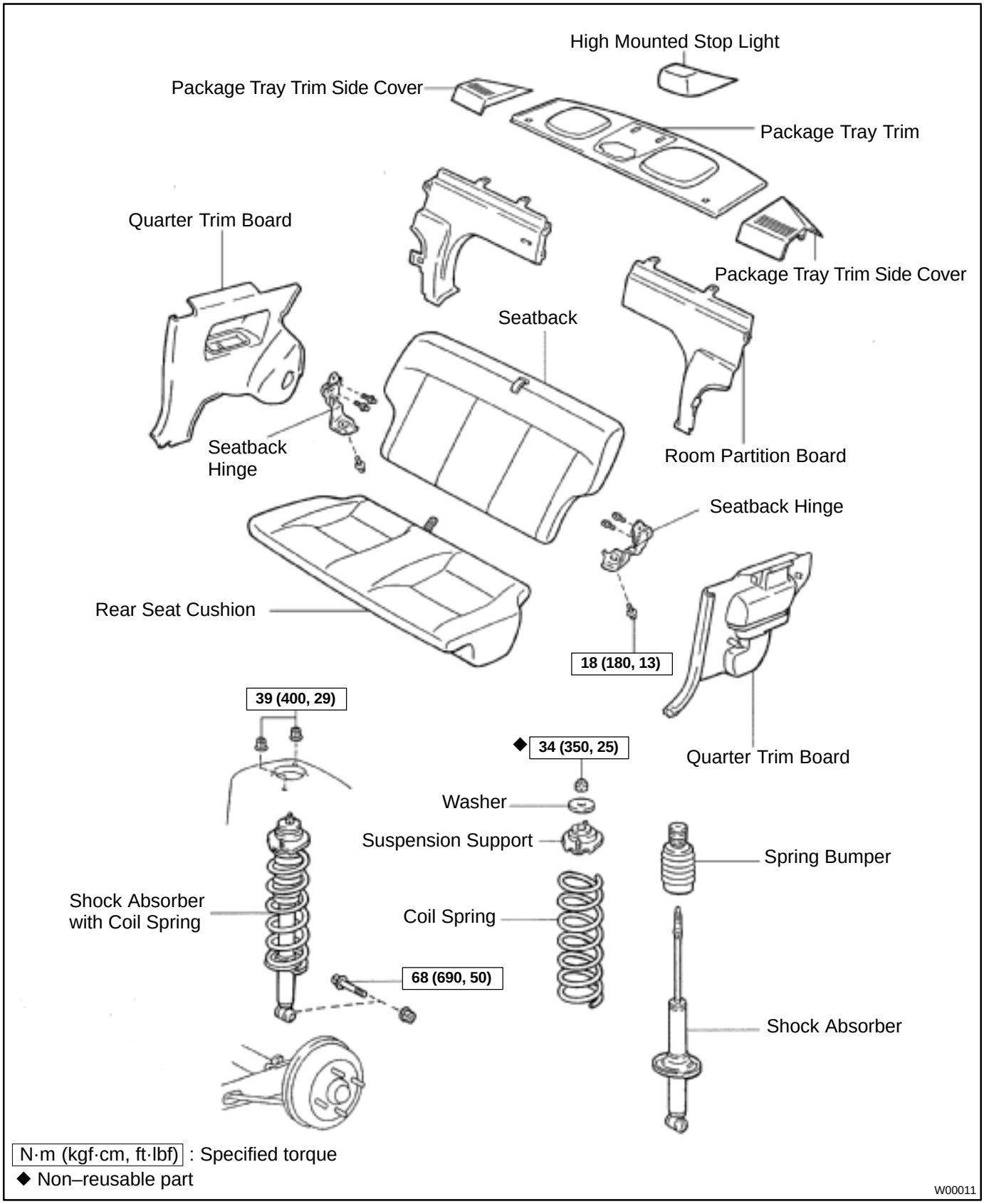

N·m (kgf·cm, ft·lbf) : Specified torque
◆ Non–reusable part

W00011

SA11Y–01

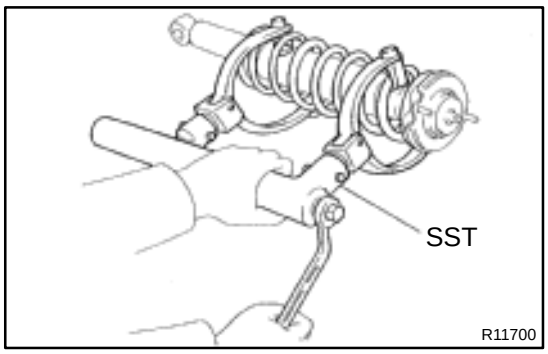

DISASSEMBLY

REMOVE COIL SPRING

(a) Using SST, compress the coil spring.
SST 09727–30021

NOTICE:

Do not use an impact wrench. It will damage the SST.

(b) Remove the nut.
(c) Remove the washer.
(d) Remove the suspension support.
(e) Remove the coil spring.
(f) Remove the spring bumper.

SA120–01

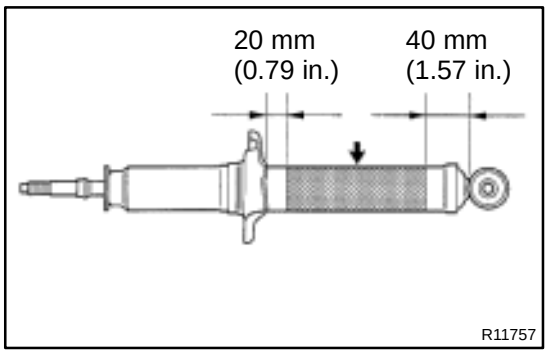

DISPOSAL

1. FULLY EXTEND SHOCK ABSORBER ROD

2. DRILL HOLE TO DISCHARGE GAS FROM CYLINDER

Using a drill, make a hole in the cylinder, as shown in the illustration to discharge the gas inside.

CAUTION:

The discharging gas is harmless, but be careful of chips which may fly up when drilling.

SA11Z–01

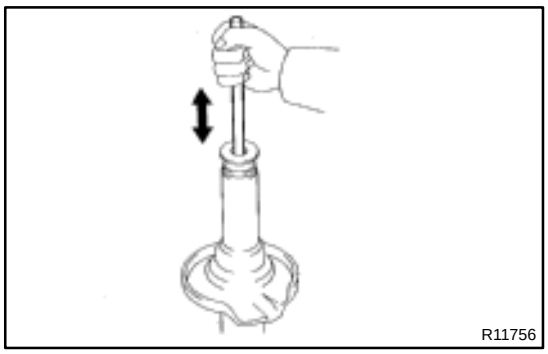

INSPECTION

INSPECT SHOCK ABSORBER

Compress and extend the shock absorber rod and check that there is no abnormal resistance or unusual operation sound.
If there is any abnormality, replace the shock absorber with a new one.

NOTICE:

When disposing of the shock absorber, see DISPOSAL on page SA–51.

SA08F–02

INSTALLATION

Installation is in the reverse order of removal (See page SA–48).

SA121–01

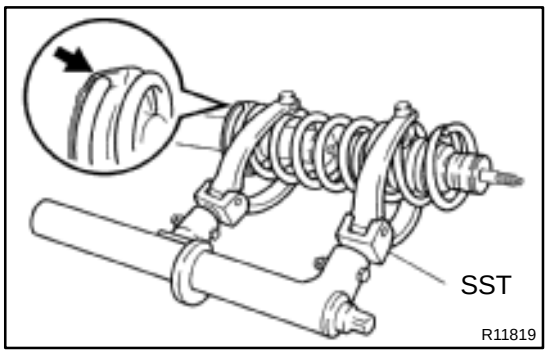

REASSEMBLY

INSTALL COIL SPRING

(a) Using SST, compress the coil spring.
SST 09727–30021

NOTICE:

Do not use an impact wrench. It will damage the SST.

(b) Install the coil spring to the shock absorber.

HINT:

Fit the lower end of the coil spring into the gap of the spring seat of shock absorber.

(c) Install the spring bumper to the shock absorber piston rod.

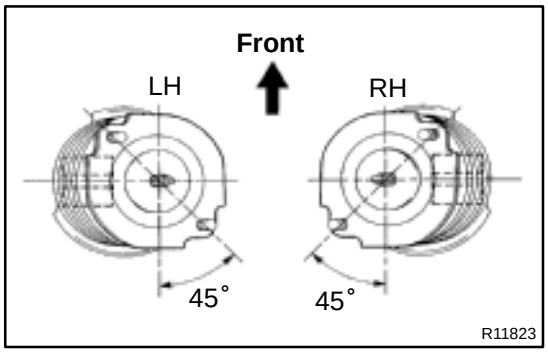

(d) Align the suspension support with the shock absorber lower bracket, as shown in the illustration and install it.

(e) Install the washer.

(f) Install a new nut and torque it.
Torque: 34 N·m (350 kgf·cm, 25 ft·lbf)

(g) Remove the SST.
SST 09727–30021

SA13Y–01

REMOVAL

1. REMOVE REAR SEAT CUSHION, SEATBACK HINGE AND SEATBACK
Torque: 18 N·m (180 kgf·cm, 13 ft·lbf)
2. REMOVE QUARTER TRIM BOARD
3. REMOVE ROOM PARTITION BOARD
4. REMOVE PACKAGE TRAY TRIM AND SIDE COVER
5. REMOVE HIGH MOUNTED STOP LIGHT
6. REMOVE REAR WHEEL
Torque: 103 N·m (1,050 kgf·cm, 76 ft·lbf)
7. REMOVE SHOCK ABSORBER WITH COIL SPRING

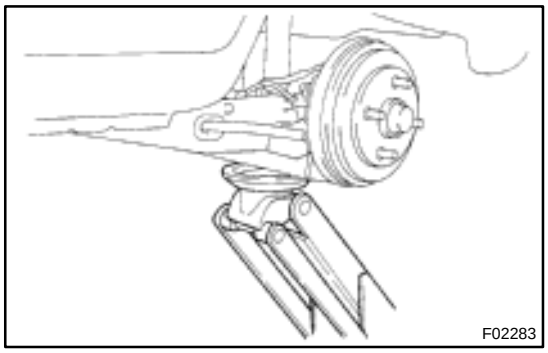
F02283

(a) Support the axle beam with a jack.
(b) Remove the nut and bolt on lower side of the shock absorber.
Torque: 68 N·m (690 kgf·cm, 50 ft·lbf)

HINT:
At the time of installation, after stabilizing the suspension, torque the bolt.

(c) Remove the 2 nuts on upper side of the shock absorber.
Torque: 39 N·m (400 kgf·cm, 29 ft·lbf)
(d) Remove the shock absorber with coil spring.

REAR WHEEL ALIGNMENT

SA112–02

INSPECTION

1. MEASURE VEHICLE HEIGHT (See page SA–4)

2. INSPECT CAMBER

Camber	–0˚30' ± 45' (–0.5˚ ± 0.75˚)
Left–right error	45' (0.75˚) or less

HINT:
Camber is not adjustable, if the measurement is not within the specification, inspect and replace the suspension parts as necessary.

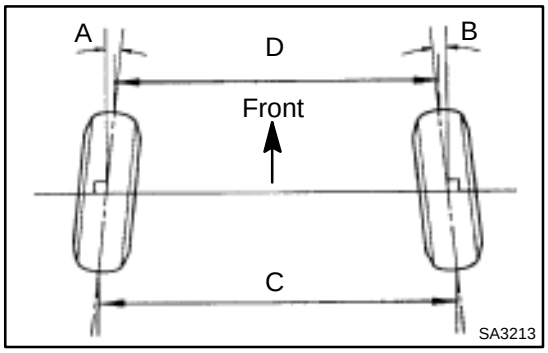

3. INSPECT TOE–IN

Toe–in (total)	A + B: 0˚20' ± 20' (0.33˚ ± 0.33˚) C – D: 3.4 ± 3.4 mm (0.13 ± 0.13 in.)

HINT:
Toe–in is not adjustable, if the measurement is not within the specification, inspect and replace the suspension parts as necessary.

REAR WHEEL HUB BOLT

SA11V–01

REPLACEMENT

1. **REMOVE BRAKE DRUM WITH AXLE HUB (See page SA–42)**

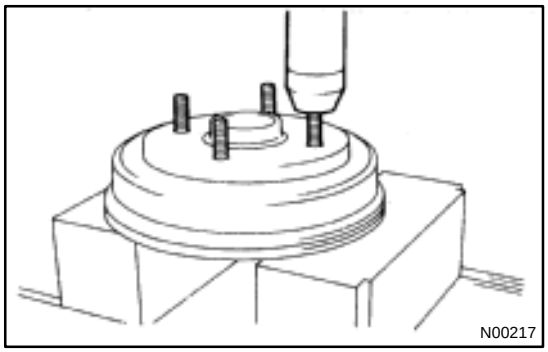

2. **REMOVE HUB BOLT**

Using a press, remove the hub bolt.

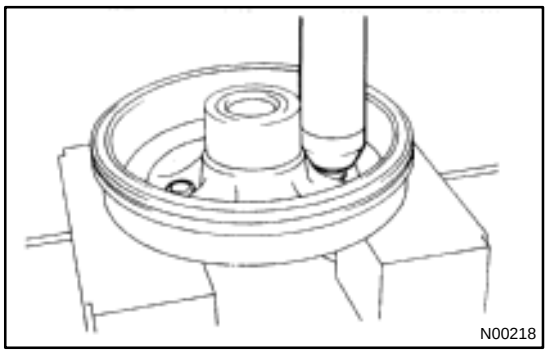

3. **INSTALL HUB BOLT**

Using a press, install a new hub bolt to the axle hub.

4. **INSTALL BRAKE DRUM WITH AXLE HUB (See page SA–45)**

TIRE AND WHEEL

SA13V–02

INSPECTION

1. INSPECT TIRE

(a) Check the tires for wear and for the proper inflation pressure.

Cold inflation pressure

Tire size	Front kPa (kgf/cm^2, psi)	Rear kPa (kgf/cm^2, psi)
P185/60R14 82H	180 (1.8, 26)	180 (1.8, 26)

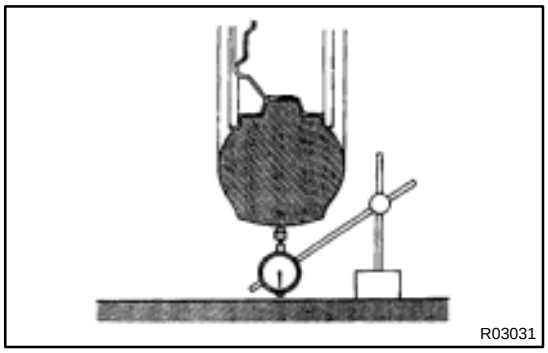
R03031

(b) Check the tire runout.

Tire runout: 1.4 mm (0.055 in.) or less

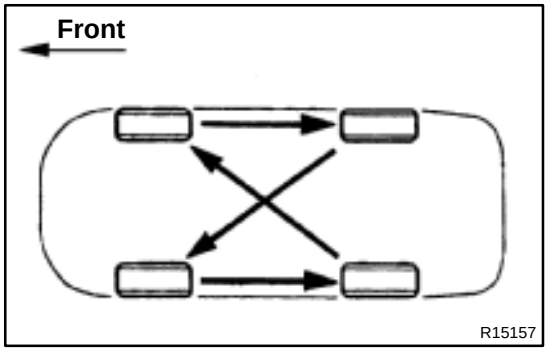

R15157

2. ROTATING TIRES

HINT:

See the illustration for where to rotate each tire.

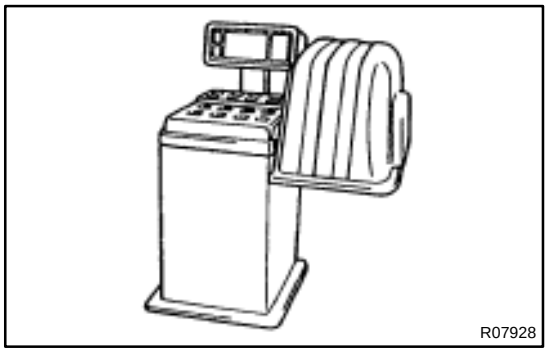
R07928

3. INSPECT WHEEL BALANCE

(a) Check and adjust the Off–the–car balance.

(b) If necessary, check and adjust the On–the–car balance.

Unbalance after adjustment: 8.0 g (0.018 lb) or less

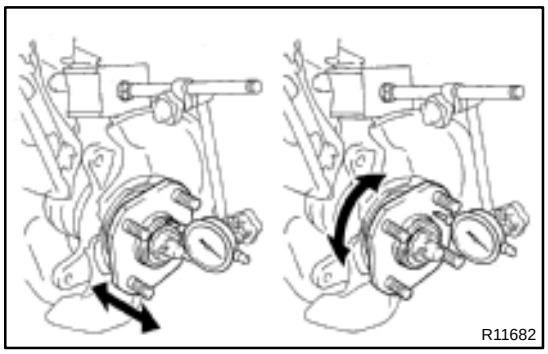

4. CHECK WHEEL BEARING LOOSENESS

(a) Check the backlash in bearing shaft direction.
Maximum: 0.05 mm (0.0020 in.)

(b) Check the axle hub deviation.
Maximum: 0.05 mm (0.0020 in.)

5. CHECK FRONT SUSPENSION FOR LOOSENESS

6. CHECK STEERING LINKAGE FOR LOOSENESS

7. CHECK BALL JOINT FOR LOOSENESS

8. CHECK SHOCK ABSORBER WORKS PROPERLY

- Check for oil leaks
- Check mounting bushings for wear
- Bounce front and rear of the vehicle

TROUBLESHOOTING

SA10Z–02

PROBLEM SYMPTOMS TABLE

Use the table to help you find the cause of the problem. The numbers indicate the priority of the likely case of the problem. Check each part in order. If necessary, replace these parts.

Symptom	Suspect Area	See page
Wander/pulls	1. Tire (Worn or improperly inflated)	SA–2
	2. Wheel alignment (Incorrect)	SA–4
		SA–8
	3. Steering linkage (Loosen or worn)	–
	4. Hub bearings (Worn)	SA–10
		SA–42
	5. Steering gear (Out of adjustment or broken)	SR–30
	6. Suspension parts (Worn)	–
Bottoming	1. Vehicle (Overloaded)	–
	2. Spring (Weak)	SA–24
		SA–47
	3. Shock absorber (Worn)	SA–24
		SA–47
Sways/pitches	1. Tire (Worn or improperly inflated)	SA–2
	2. Stabilizer bar (Rear axle beam)	SA–38
		SA–57
	3. Shock absorber (Worn)	SA–24
		SA–47
Front wheel shimmy	1. Tire (Worn or improperly inflated)	SA–2
	2. Wheels (Out of balance)	SA–2
	3. Shock absorber (Worn)	SA–24
	4. Wheel alignment (Incorrect)	SA–4
	5. Ball joint (Worn)	SA–34
	6. Hub bearing (Worn)	SA–10
	7. Steering linkage (Loosen or worn)	–
	8. Steering gear (Out of adjustment or broken)	SR–30
Abnormal tire wear	1. Tire (Worn or improperly inflated)	SA–2
	2. Wheel alignment (Incorrect)	SA–4
		SA–8
	3. Suspension parts (Worn)	–
	4. Shock absorber (Worn)	SA–24
		SA–47

CIRCUIT OPENING RELAY

COMPONENTS

SF0XJ–01

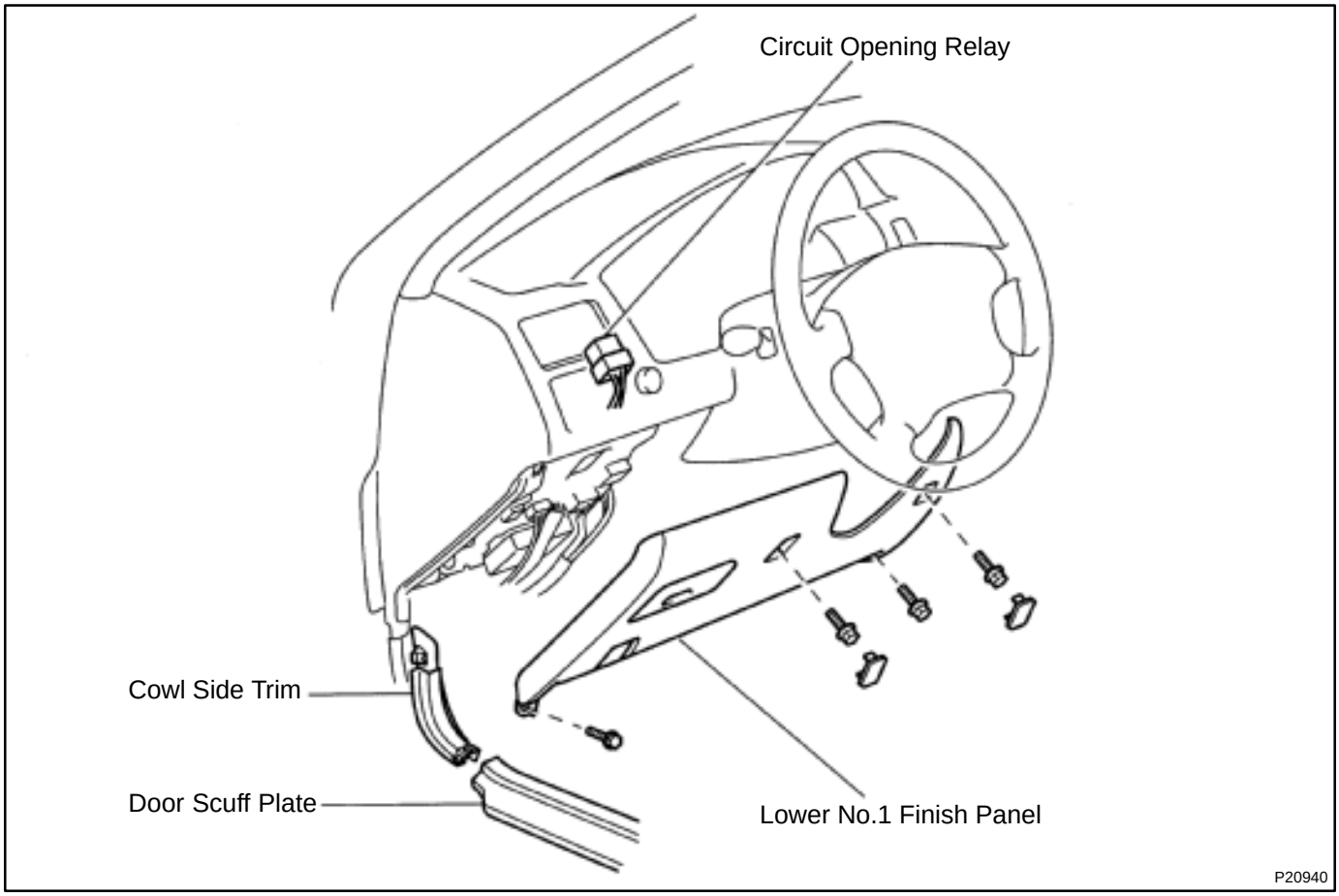

SF0XK–01

INSPECTION

1. REMOVE CIRCUIT OPENING RELAY

2. INSPECT CIRCUIT OPENING RELAY CONTINUITY

(a) Using an ohmmeter, check that there is continuity between terminals 1 and 2.

If there is no continuity, replace the relay.

(b) Check that there is no continuity between terminals 5 and 3.

If there is continuity, replace the relay.

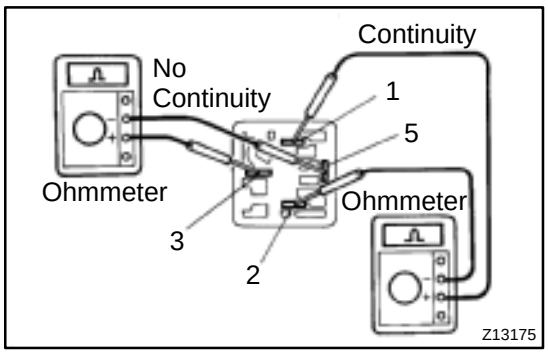

3. INSPECT CIRCUIT OPENING RELAY OPERATION

(a) Apply battery voltage across terminals 1 and 2.

(b) Using an ohmmeter, check that there is continuity between terminals 5 and 3.

If there is no continuity, replace the relay.

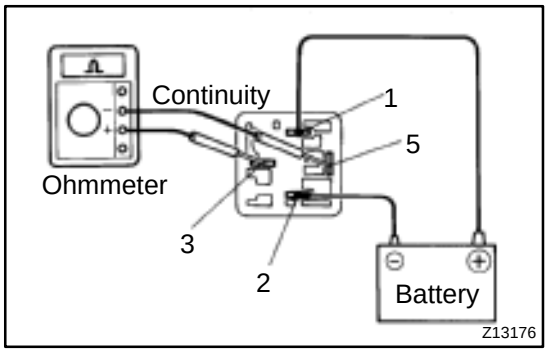

4. REINSTALL CIRCUIT OPENING RELAY

ENGINE CONTROL MODULE (ECM)

SF0WI–01

COMPONENTS

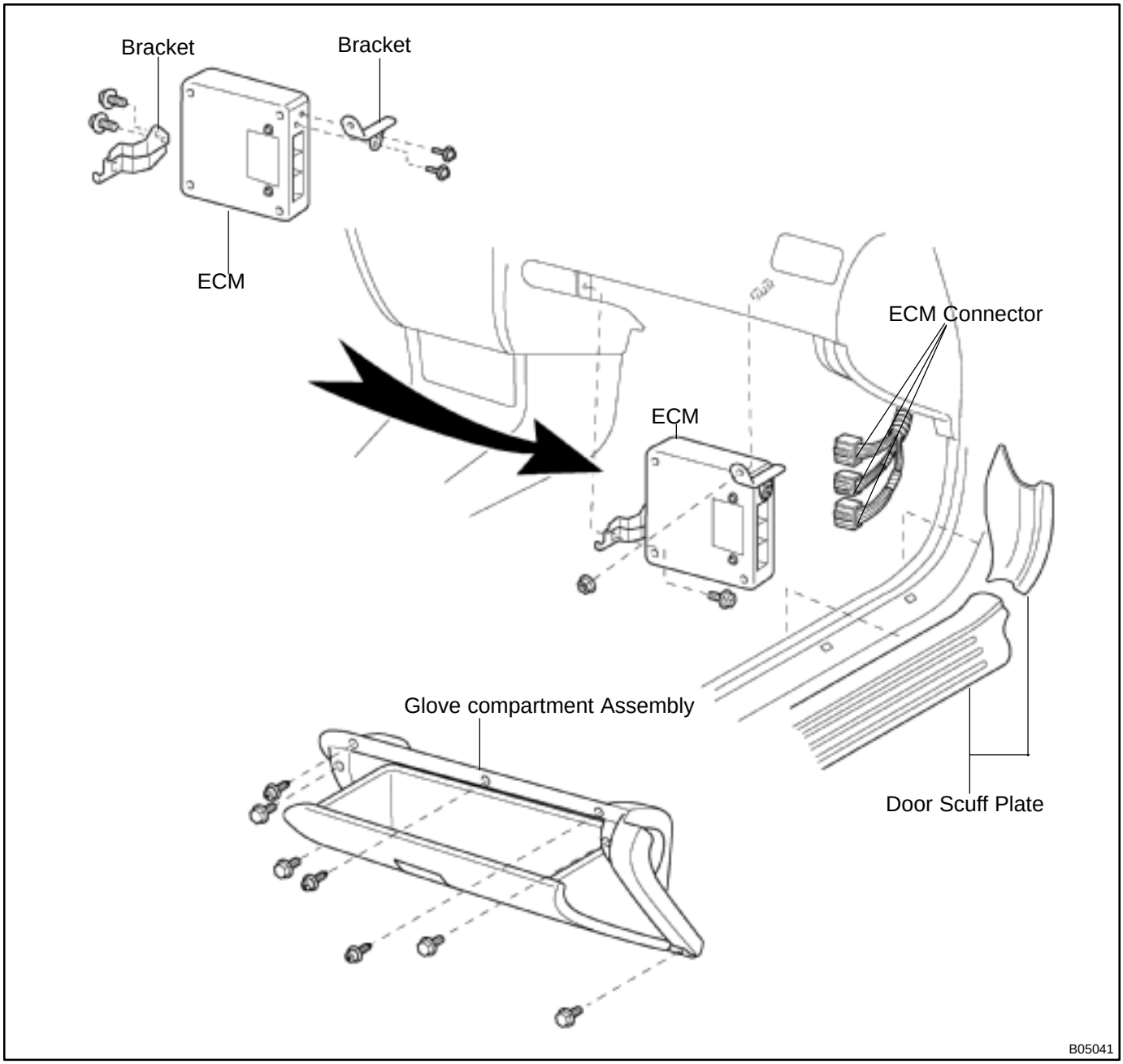

SF0WJ–01

INSPECTION

1. **REMOVE ECM**
2. **INSPECT ECM (See page DI–18)**
3. **REINSTALL ECM**

ENGINE COOLANT TEMPERATURE (ECT) SENSOR

SF0XP–01

COMPONENTS

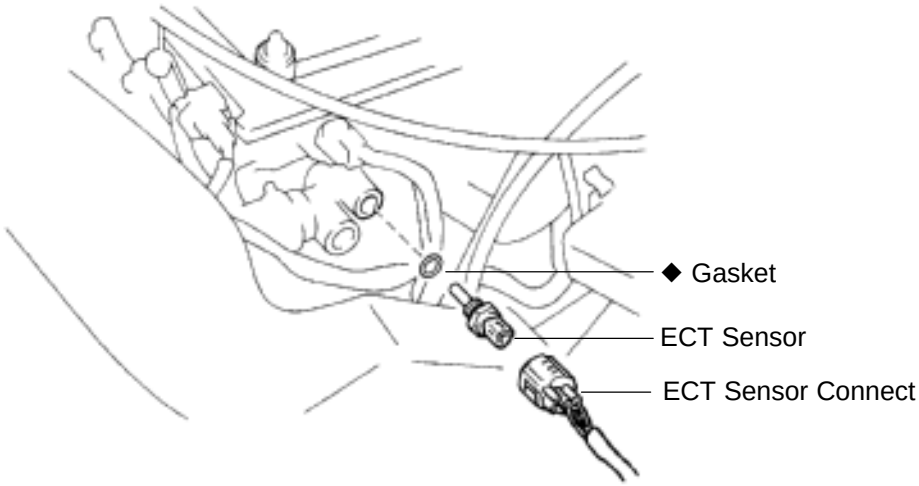

◆ Non–reusable part

B05039

SF0XQ–01

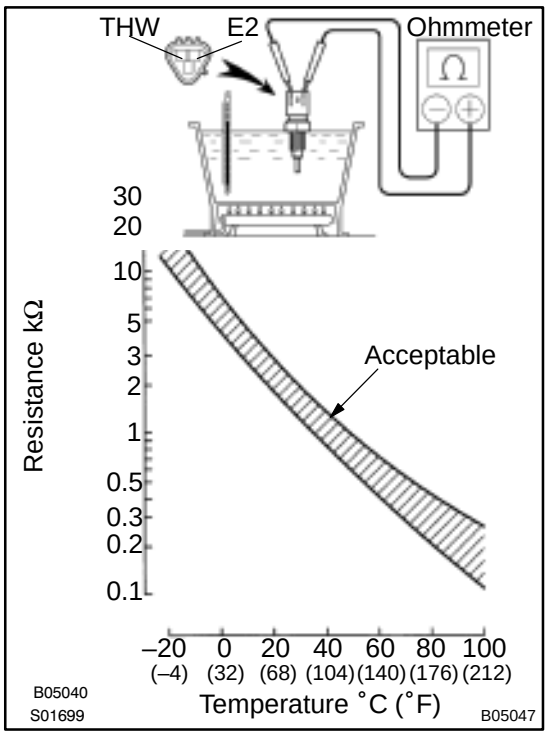

INSPECTION

1. DRAIN ENGINE COOLANT

2. REMOVE ECT SENSOR

3. INSPECT ECT SENSOR

Using an ohmmeter, measure the resistance THW and E2 between the terminals.

Resistance:

Refer to the graph

If the resistance is not as specified, replace the ECT sensor.

4. REINSTALL ECT SENSOR

5. REFILL WITH ENGINE COOLANT

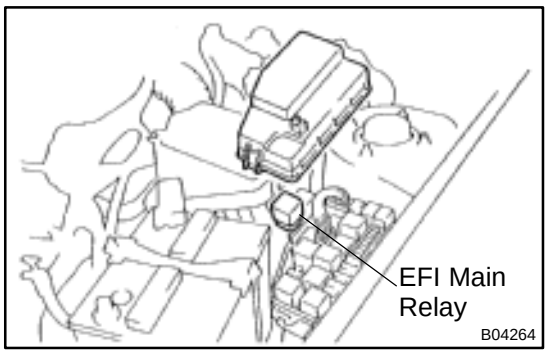

EFI MAIN RELAY

SF0XI–01

INSPECTION

1. REMOVE EFI MAIN RELAY (Marking: EFI MAIN)

LOCATION: In the engine compartment relay box.

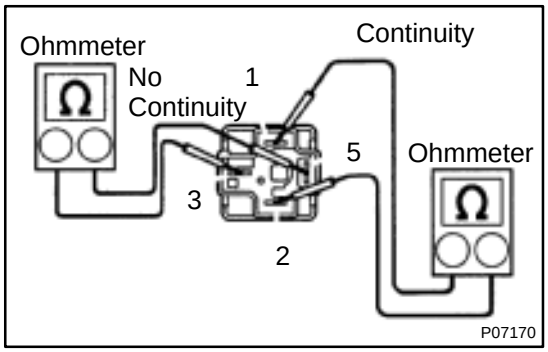

2. INSPECT EFI MAIN RELAY CONTINUITY

(a) Using an ohmmeter, check that there is continuity between terminals 1 and 2.

If there is no continuity, replace the relay.

(b) Check that there is no continuity between terminals 5 and 3.

If there is continuity, replace the relay.

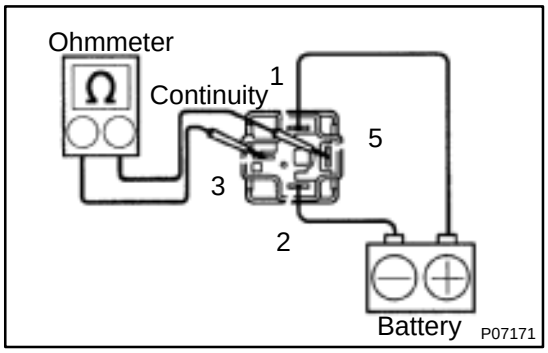

3. INSPECT EFI MAIN RELAY OPERATION

(a) Apply battery voltage across terminals 1 and 2.

(b) Using an ohmmeter, check that there is continuity between terminals 5 and 3.

If there is no continuity, replace the relay.

4. REINSTALL EFI MAIN RELAY

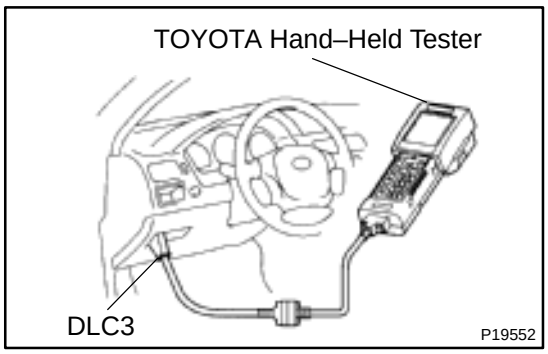

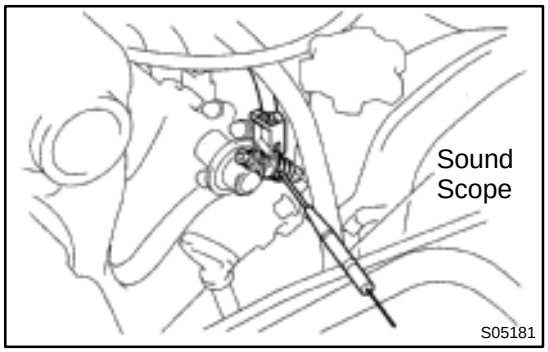

FUEL CUT RPM

SF0WH–01

INSPECTION

1. WARM UP ENGINE

Allow the engine to warm up to normal operating temperature.

2. CONNECT TOYOTA HAND–HELD TESTER OR OBDII SCAN TOOL

(a) Remove the fuse cover on the instrument panel.

(b) Connect the TOYOTA hand–held tester or OBDII scan tool to the DLC3.

(c) Please refer to the TOYOTA hand–held tester or OBDII scan tool operator's manual for futher details.

3. INSPECT FUEL CUT OFF PRM

(a) Increase the engine speed to at least 2,500 rpm.

(b) Use a sound scope to check for injector operating noise.

(c) Check that when the throttle lever is released, injector operation noise stops momentarily and then resumes.

HINT:

Measure with the A/C OFF.

Fuel return rpm: 900 rpm

4. DISCONNECT TOYOTA HAND–HELD TESTER OR OBDII SCAN TOOL

FUEL PRESSURE REGULATOR

SF0WX–04

COMPONENTS

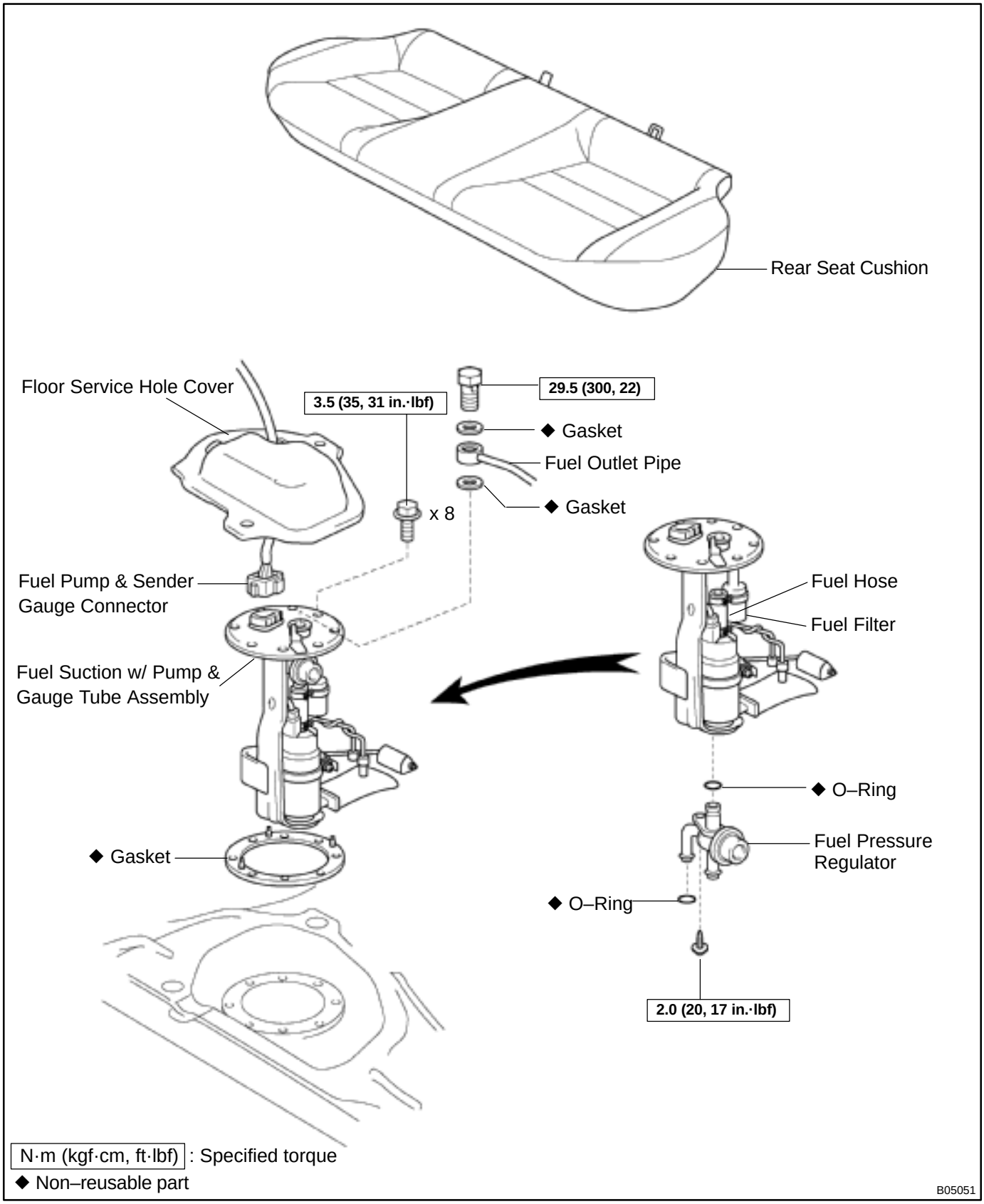

N·m (kgf·cm, ft·lbf) : Specified torque
◆ Non–reusable part

B05051

SF0WZ–03

INSTALLATION

Installation is in the reverse order of removal. (See page SF–14)

SF0WY–01

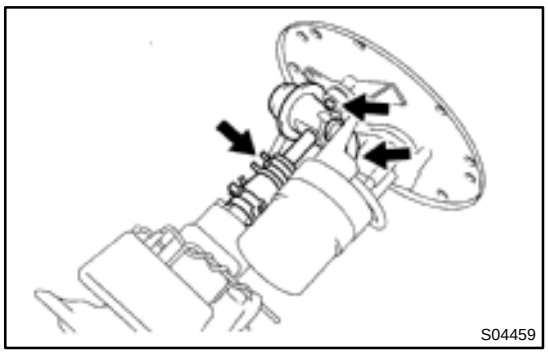

REMOVAL

1. REMOVE FUEL SUCTION TUBE
(See page SF–8)

2. REMOVE FUEL PRESSURE REGULATOR

(a) Remove the clip from the fuel filter.

(b) Disconnect the fuel hose from the pressure regulator.

(c) Remove the screw, and pull out the pressure regulator.
Torque: 2.0 N·m (20 kgf·cm, 17 in.·lbf)

(d) Remove the O–ring from the pressure regulator.

HINT:

Apply a light coat of gasoline to a new O–ring, and install it to the pressure regulator.

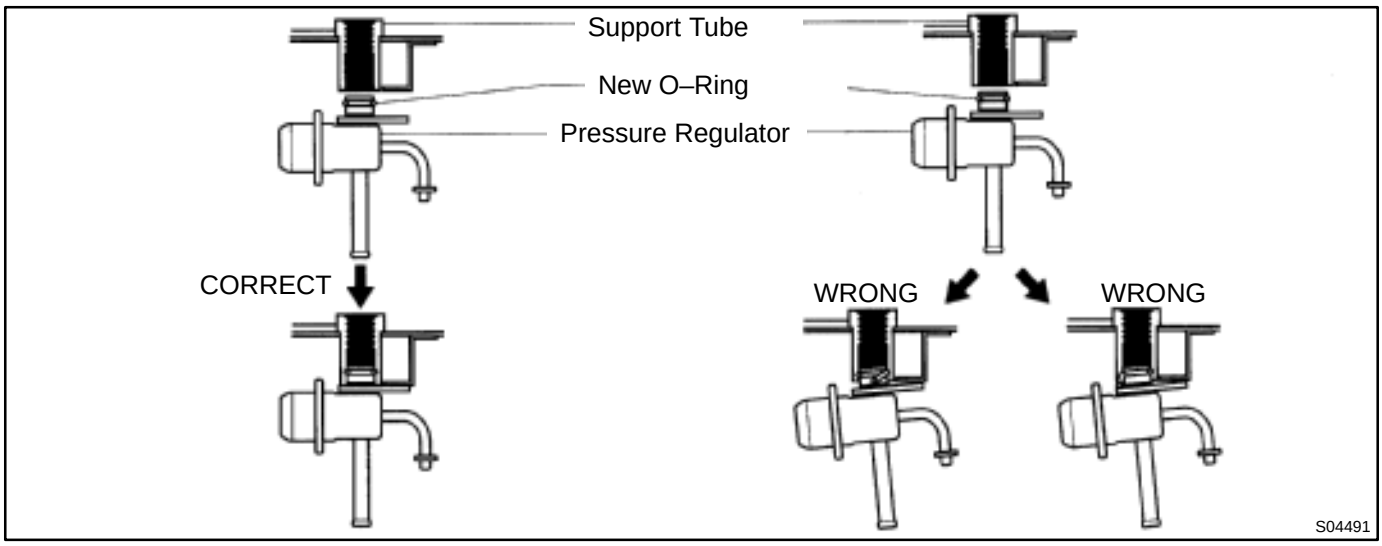

SF0X5–01

COMPONENTS

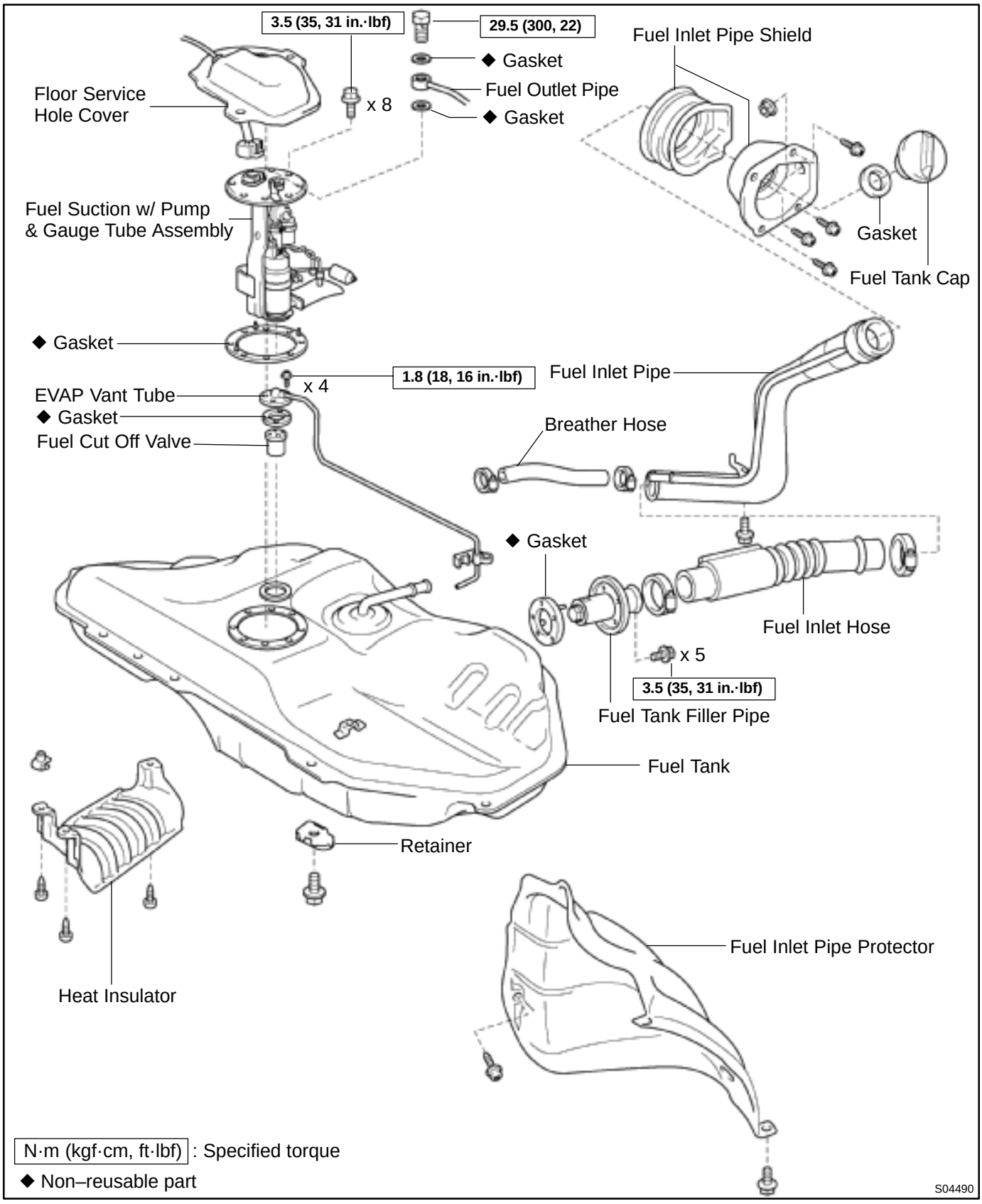

SF0X7–01

INSPECTION

INSPECT FUEL TANK AND LINE

(a) Check the fuel lines for cracks or leakage, and all connections for deformation.

(b) Check the fuel tank vapor vent system hoses and connections for looseness, sharp bends or damage.

(c) Check the fuel tank for deformation, cracks, fuel leakage or tank band looseness.

(d) Check the filler neck for damage or fuel leakage.

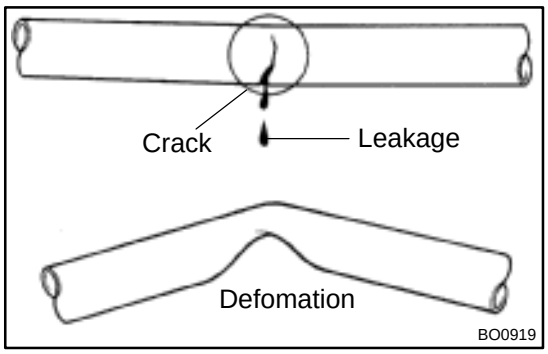

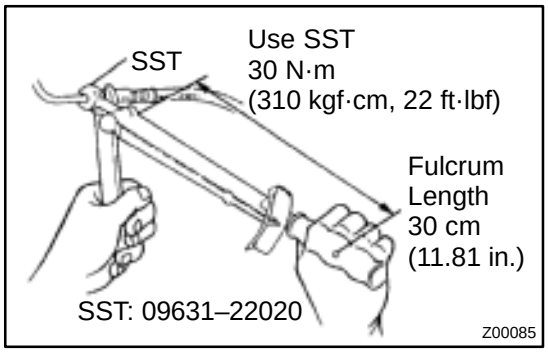

(e) Hose and the tube connections are as shown in the illustration.

(f) Make sure the hose clamps do not interfere with the tank, tubes, hoses and other parts.

If a problem is found, repair or replace the parts as necessary.

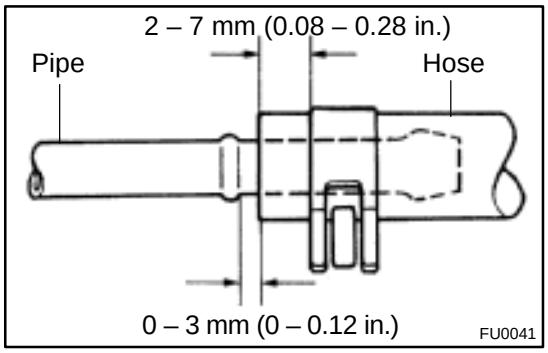

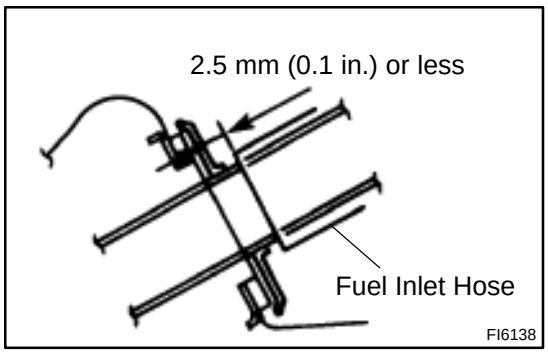

FUEL TANK AND LINE

SF0X6–01

PRECAUTION

1. **Always use new gaskets when replacing the fuel tank or components parts.**
2. **Apply the proper torque to all parts tightened.**

SF0WS–01

COMPONENTS

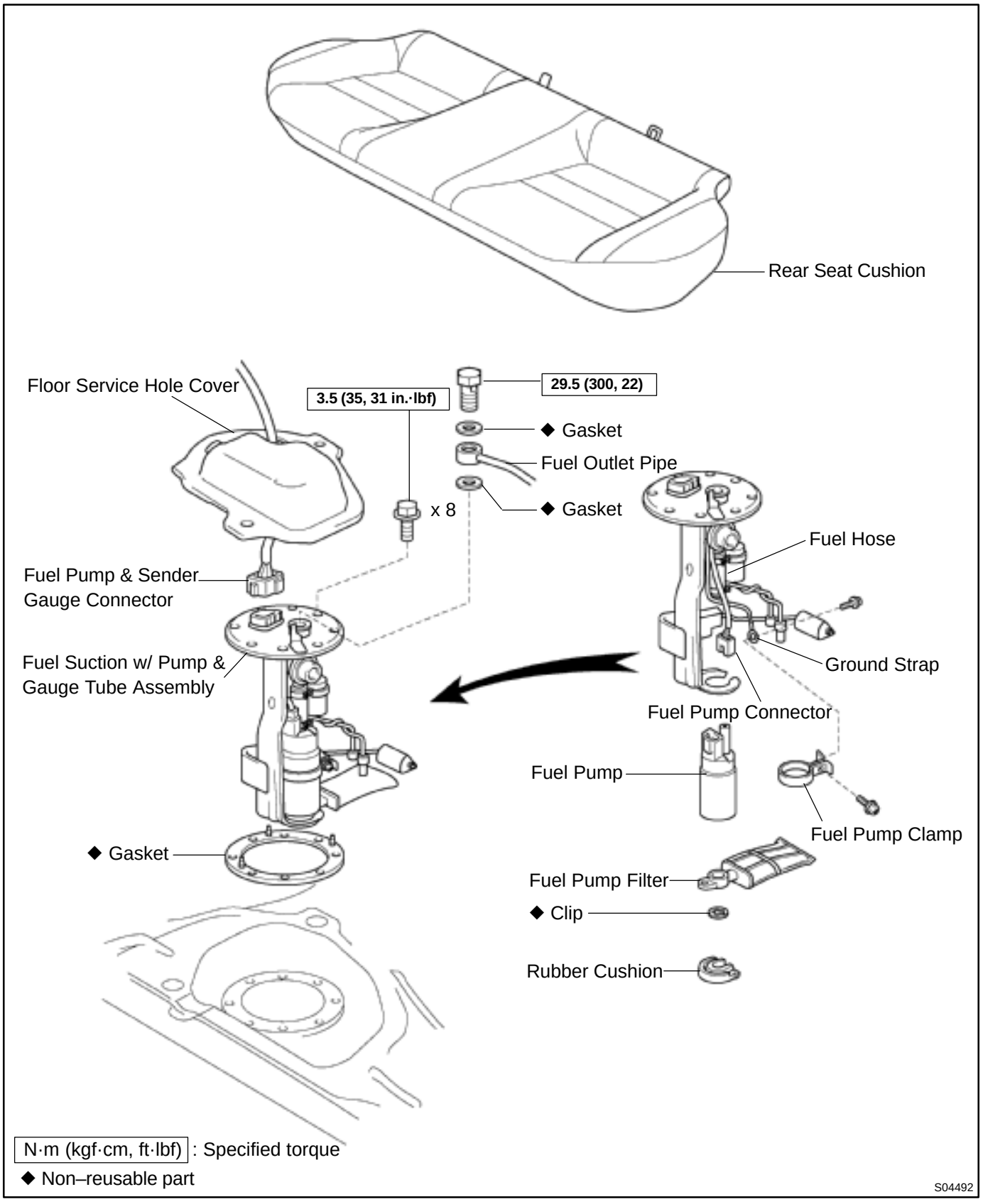

SF0WU–01

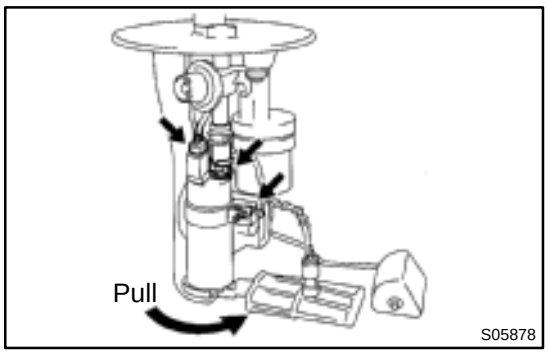

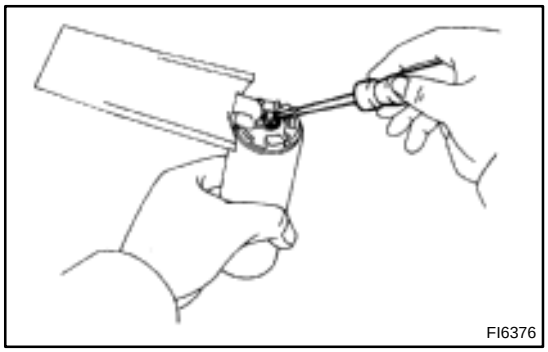

DISASSEMBLY

1. DISCONNECT FUEL PUMP CONNECTOR

2. REMOVE FUEL PUMP FROM FUEL PUMP BRACKET

(a) Disconnect the ground strap from the fuel pump clamp.

(b) Pull off the lower side of the fuel pump from the pump bracket.

(c) Disconnect the fuel hose from the fuel pump, and remove the fuel pump.

(d) Remove the rubber cushion from the fuel pump.

3. REMOVE FUEL PUMP CLAMP

4. REMOVE FUEL PUMP FILTER FROM FUEL PUMP

(a) Using a small screwdriver, remove the clip.

(b) Pull out the pump filter.

HINT:

Install the pump filter with a new clip.

SF0WW–01

INSTALLATION

Installation is in the reverse order of removal. (see page SF–9)

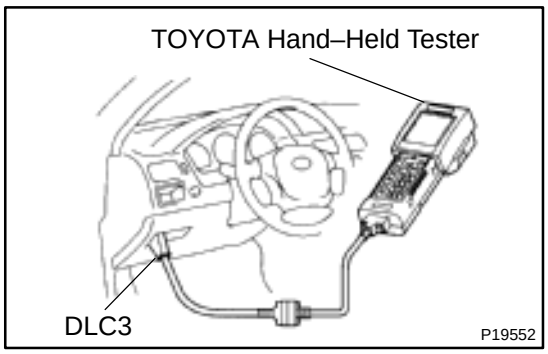

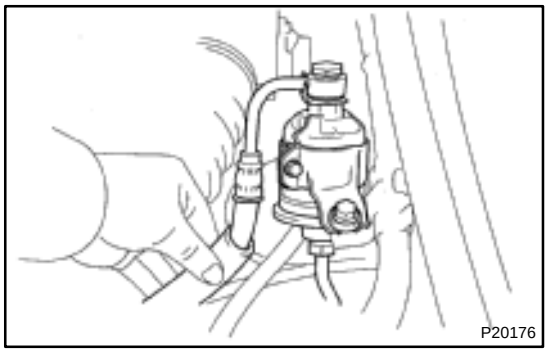

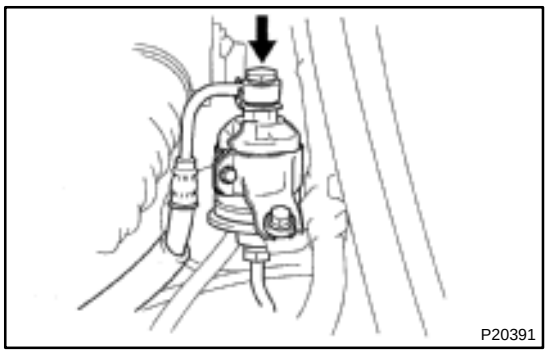

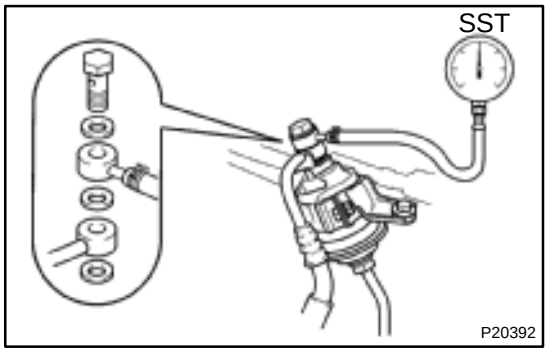

FUEL PUMP

SF0WR–03

ON–VEHICLE INSPECTION

1. CHECK FUEL PUMP OPERATION

(a) Remove the fuse cover on the instrument panel.
(b) Connect the TOYOTA hand–held tester to the DLC3.
(c) Turn the ignition switch ON and TOYOTA hand–held tester main switch ON.

NOTICE:

Do not start the engine.

(d) Select the active test mode on the TOYOTA hand–held tester.
(e) Please refer to the TOYOTA hand–held tester operator's manual for further details.
(f) If you have no TOYOTA hand–held tester, connect the positive (+) and negative (–) leads from the battery to the fuel pump connector.
(See step 6)
(g) Check that there is pressure in the fuel inlet hose from the fuel filter.

HINT:

If there is fuel pressure, you will hear the sound of fuel flowing.
If there is no pressure, check these parts.

- Fusible link
- H–Fuses
- Fuses
- EFI main relay
- Circuit opening relay
- Fuel pump
- ECM
- Wiring connections

2. CHECK FUEL PRESSURE

(a) Check the battery positive voltage is above 11 V.
(b) Disconnect the negative (–) terminal cable from the battery.
(c) Remove the union bolt and 2 gaskets, and disconnect the fuel inlet hose from the fuel filter outlet.

CAUTION:

Put a shop towel under the fuel filter. Slowly loosen the union bolt.

(d) Install the fuel inlet hose and SST (pressure gauge) to the fuel filter outlet with the 3 gaskets and union bolt.
SST 09268–45012
Torque: 29.5 N·m (300 kgf·cm, 22 ft·lbf)
(e) Wipe off any splattered gasoline.
(f) Reconnect the negative (–) terminal cable to the battery.
(g) Connect the TOYOTA hand–held tester to the DLC3.
(See step 1 check fuel pump operation (a) to (f))

(h) Turn the ignition switch ON.
(i) Measure the fuel pressure.
Fuel pressure:
301 – 347 kPa
(3.1 – 3.5 kgf/cm^2, 44 – 50 psi)

If pressure is high, replace the fuel pressure regulator.
If pressure is low, check these parts:
- Fuel hoses and connection
- Fuel pump
- Fuel filter
- Fuel pressure regulator

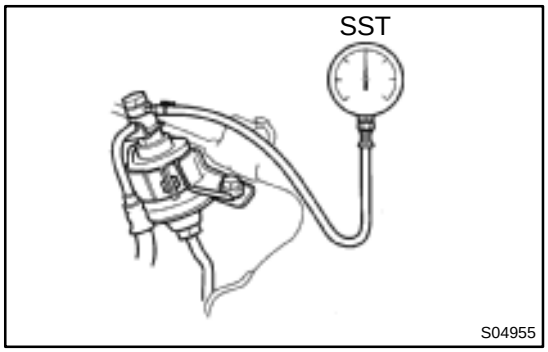

(j) Remove the TOYOTA hand–held tester from the DLC3.
(k) Reinstall the fuse cover on instrument panel.
(l) Start the engine.
(m) Measure the fuel pressure at idle.
Fuel pressure:
301 – 347 kPa
(3.1 – 3.5 kgf/cm^2, 44 – 50 psi)
(n) Stop the engine.
(o) Check that the fuel pressure remains as specified for 5 minutes after the engine has stopped.
Fuel pressure:
147 kPa (1.5 kgf/cm^2, 21 psi) or more

If pressure is not as specified, check the fuel pump, pressure regulator and/or injector.
(p) After checking fuel pressure, disconnect the negative (–) terminal cable from the battery and carefully remove the SST to prevent gasoline from splashing.
SST 09268–45012
(q) Connect the fuel inlet hose to the fuel filter with 2 new gaskets and the union bolt.
Torque: 29.5 N·m (300 kgf·cm, 22 ft·lbf)
(r) Check for fuel leakage. (See fuel system in precaution)

3. REMOVE REAR SEAT CUSHION

4. DISCONNECT FUEL PUMP AND SENDER GAUGE CONNECTOR

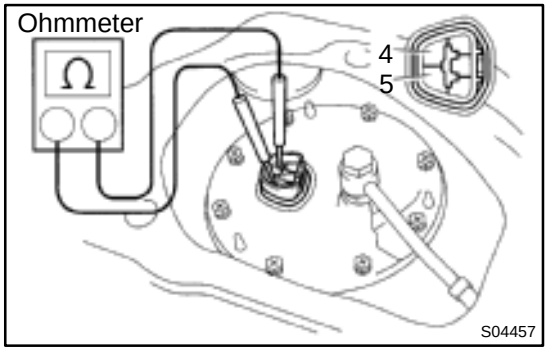

5. INSPECT FUEL PUMP RESISTANCE

Using an ohmmeter, measure the resistance between terminals 4 and 5.
Resistance: 0.2 – 3.0 Ω at 20˚C (68˚F)
If the resistance is not as specified, replace the fuel pump.

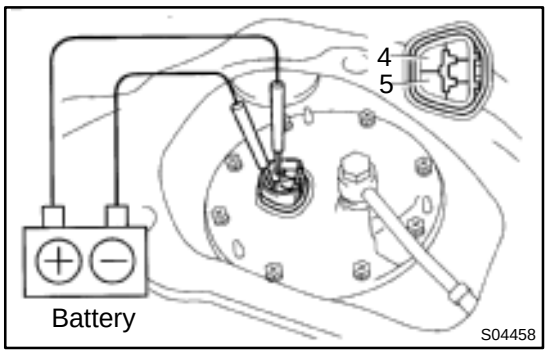

6. INSPECT FUEL PUMP OPERATION

Connect the positive (+) lead from the battery to terminal 4 of the connector, and the negative (–) lead to terminal 5. Check that the fuel pump operates.

NOTICE:

- **These tests must be performed quickly (within 10 seconds) to prevent the coil from burning out.**
- **Keep the fuel pump as far away from the battery as possible.**
- **Always perform switching at the battery side.**

If operation is not as specified, replace the fuel pump or lead wire.

7. RECONNECT FUEL PUMP AND SENDER GAUGE CONNECTOR

8. REINSTALL REAR SEAT CUSHION

SF0WV–01

REASSEMBLY

Reassembly is in the reverse order of disassembly (See page SF–10).

SF0WT–04

REMOVAL

CAUTION:

Do not smoke or work near an open flame when working on the fuel pump.

1. REMOVE REAR SEAT CUSHION

2. REMOVE FLOOR SERVICE HOLE COVER

3. DISCONNECT FUEL PUMP & SENDER GAUGE CONNECTOR

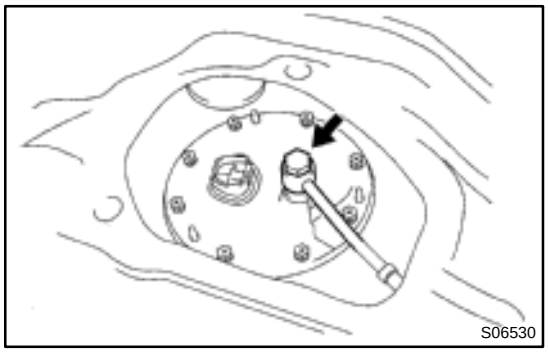
S06530

4. DISCONNECT FUEL OUTLET PIPE FROM FUEL SUCTION TUBE

CAUTION:

Remove the fuel filler cap to prevent the fuel from flowing out.

Remove the union bolt and 2 gaskets, and disconnect the outlet pipe from the suction tube.

HINT:

Install the outlet pipe with 2 new gaskets and union bolt.

Torque: 29.5 N·m (300 kgf·cm, 22 ft·lbf)

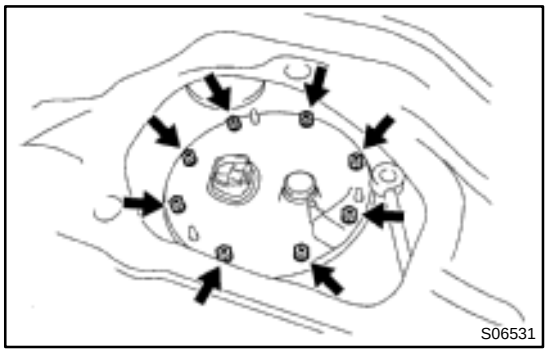
S06531

5. REMOVE FUEL SUCTION w/ PUMP & GAUGE TUBE ASSEMBLY

(a) Remove the 8 bolts.

Torque: 3.5 N·m (35 kgf·cm, 31 in.·lbf)

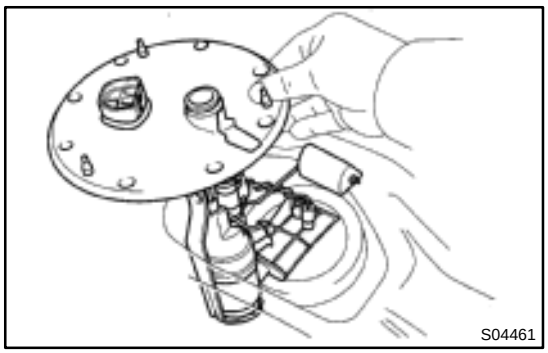
S04461

(b) Pull out the suction w/ pump & gauge tube assembly.

NOTICE:

Do not damage the fuel pump filter. Be careful that the arm of the sender gauge should not bent.

(c) Remove the gasket from the set plate.

HINT:

Install a new gasket to the set plate.

HEATED OXYGEN SENSOR

SF0WK–01

COMPONENTS

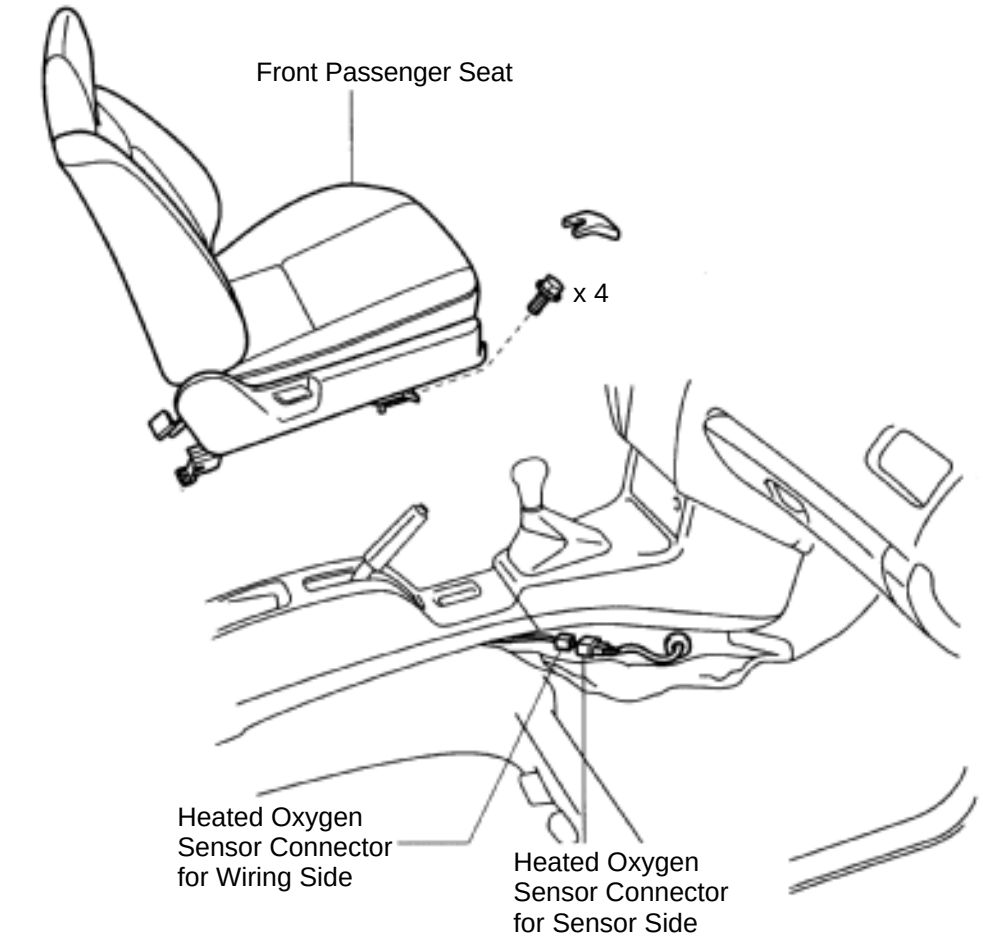

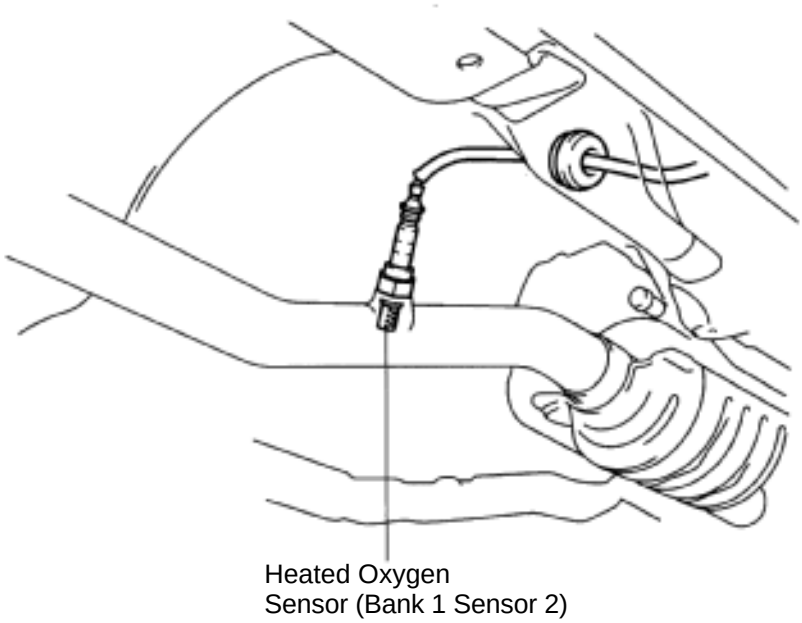

B05043

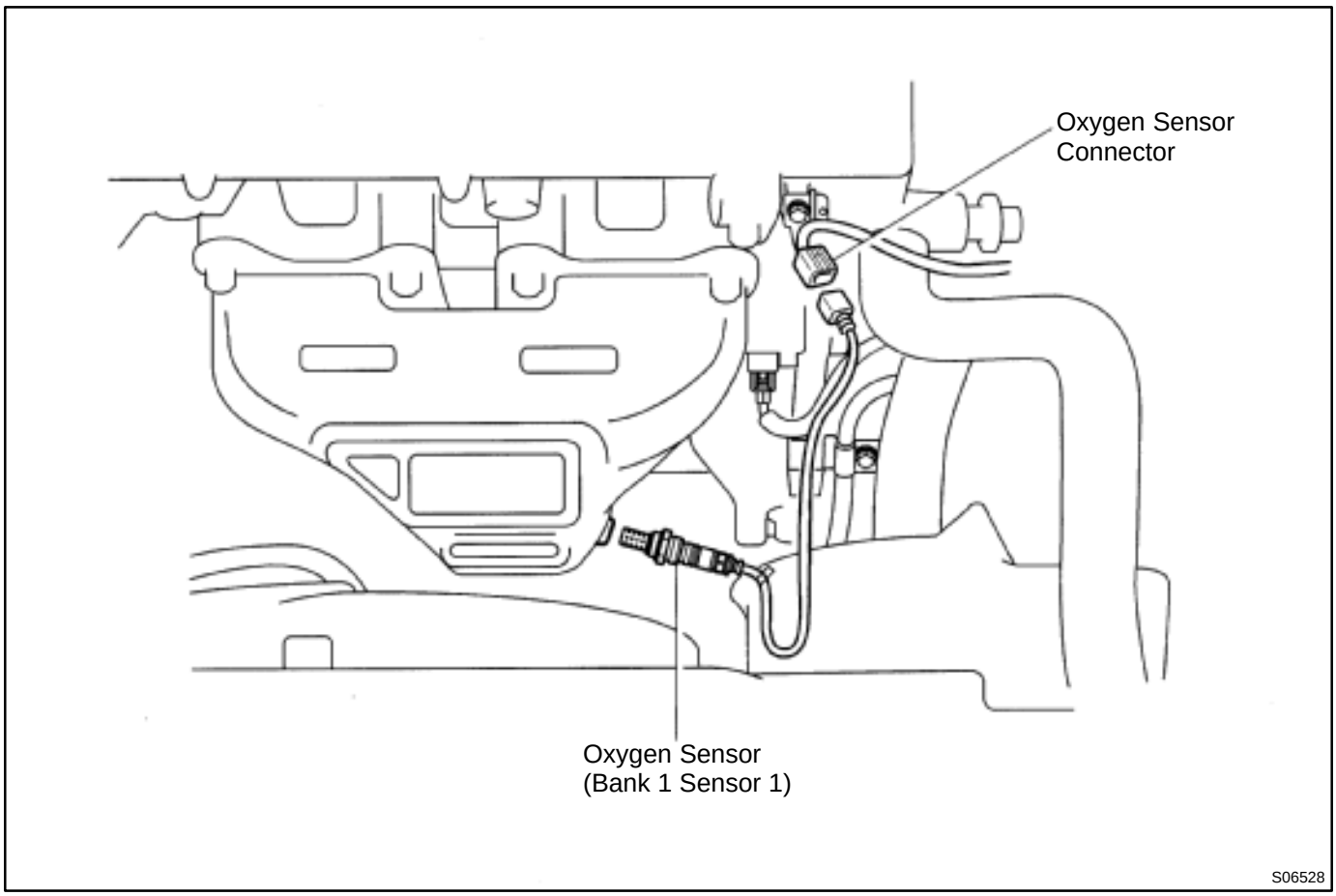
Oxygen Sensor
Connector
Oxygen Sensor
(Bank 1 Sensor 1)
S06528

SF0WL–04

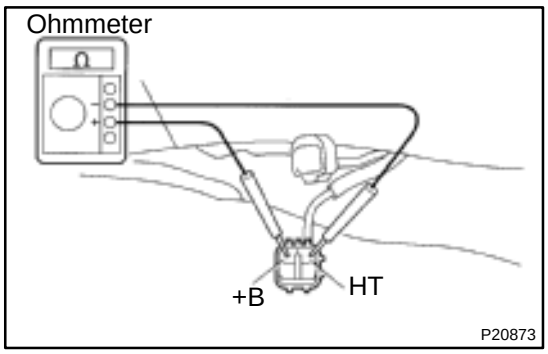

INSPECTION

1. INSPECT OPERATION OF OXYGEN SENSOR
(See page DI–48)

2. INSPECT HEATER RESISTANCE OF HEATED OXYGEN SENSOR (BANK 1 SENSOR 2)

(a) Remove the passenger's seat.
(b) Take out the console box side of the floor carpet.
(c) Disconnect the oxygen sensor connector.
(d) Using an ohmmeter, measure the resistance between the terminals +B and HT.

Resistance: 11 – 16 Ω at 20˚C (68˚F)

If the resistance is not as specified, replace the sensor.

Torque: 44 N·m (440 kgf·cm, 32 ft·lbf)

(e) Reconnect the oxygen sensor connector.
(f) Reinstall the floor carpet.
(g) Reinstall the passenger's seat.

SF0XE–04

COMPONENTS

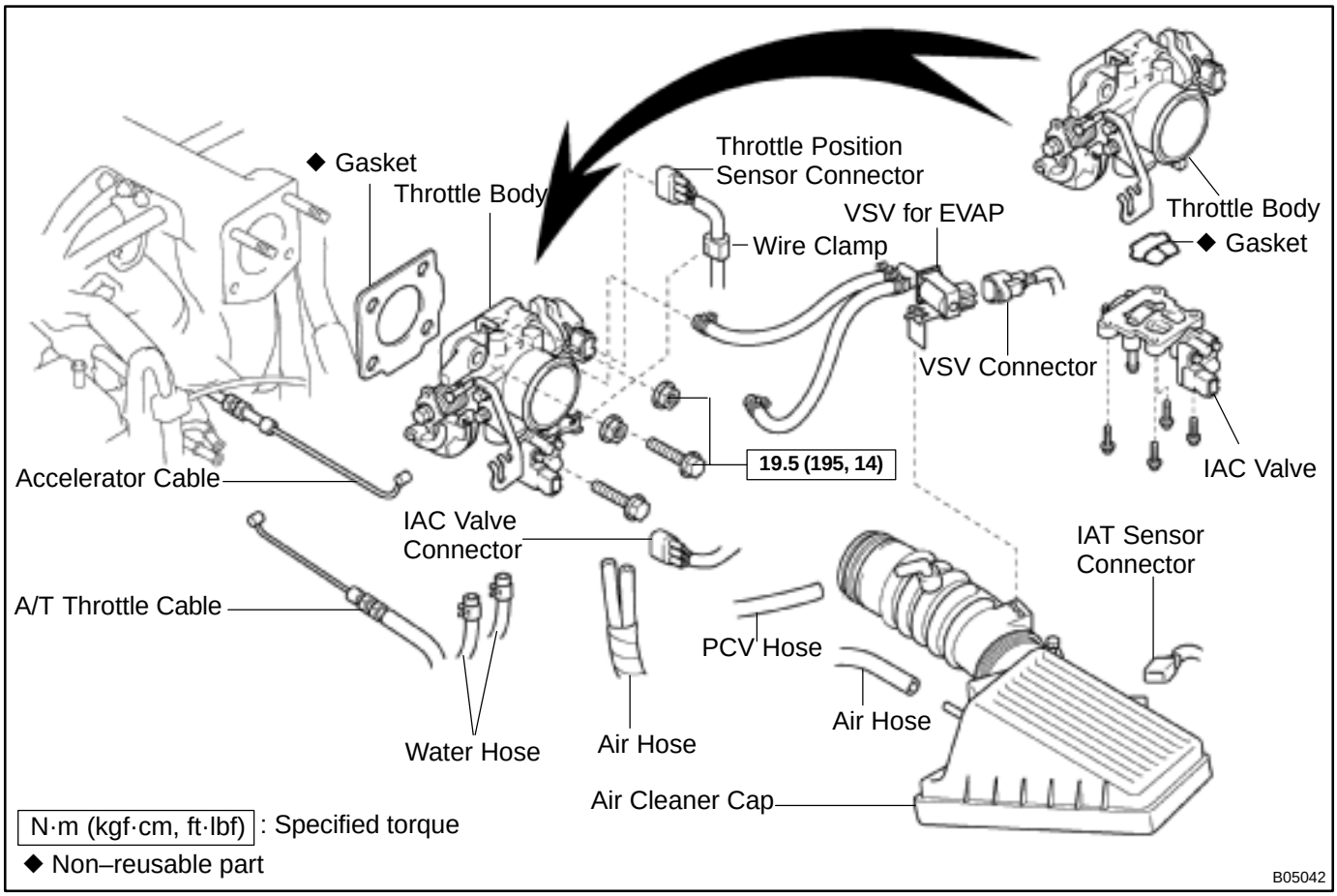

SF0XG–01

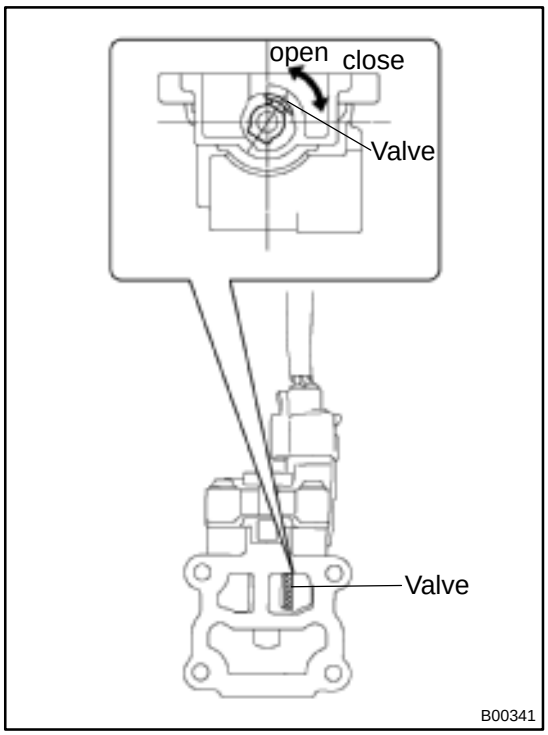

INSPECTION

INSPECT IAC VALVE OPERATION

(a) Check that the IAC valve is halfly opened.
(b) Connect the IAC valve connector to the IAC valve.
(c) Disconnect the ECT sensor connector from the ECT sensor.
(d) Turn the ignition switch ON.
(e) Check that the IAC valve moves.

HINT:

Repeat connecting and disconnecting of IAC valve connector several times and check the operation of the valve.

If operation is not as specified, replace the IAC valve.

(f) Turn the ignition switch OFF.
(g) Connect the ECT sensor connector to the ECT sensor.
(h) Disconnect the IAC valve connector from the IAC valve.

SF0XH–01

INSTALLATION

Installation is in reverse order of removal (See page SF–33).

HINT:

Install the IAC valve with a new gasket.

IDLE AIR CONTROL (IAC) VALVE

SF19Y–01

ON–VEHICLE INSPECTION

1. INSPECT IAC VALVE OPERATION

(a) Initial conditions:
- Engine at normal operating temperature
- Idle speed set correctly
- Transmission in neutral position

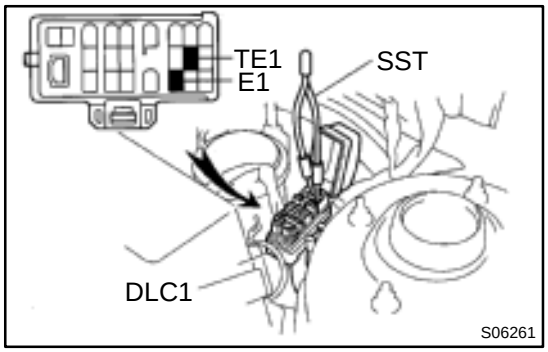

(b) Using SST, connect terminals TE1 and E1 of the DLC1.
SST 09843–18020

(c) After engine rpm is kept at 900 – 1,300 rpm for 5 seconds, check that it returns to idle speed.

If the rpm operation is not as specified, check the IAC valve, wiring and ECM.

(d) Remove the SST from the DLC1.
SST 09843–18020

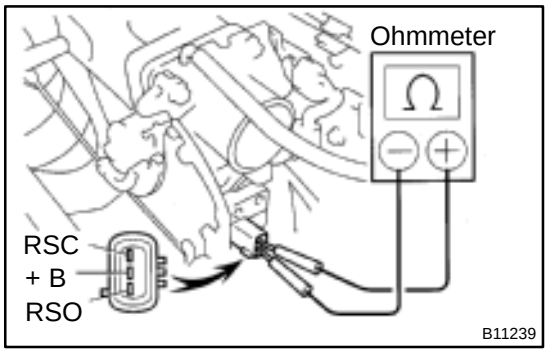

2. INSPECT IAC VALVE RESISTANCE

NOTICE:

"Cold" and "Hot" in the following sentences express the temperature of the coils themselves. "Cold" is from –10˚C (14˚F) to 50˚C (122˚F) and "Hot" is from 50˚C (122˚F) to 100˚C (212˚F).

(a) Disconnect the IAC valve connector.

(b) Using an ohmmeter, measure the resistance between terminal +B and other terminals (RSC,RSO).
Resistance:

Cold	17.0 – 24.5 Ω
Hot	21.5 – 28.5 Ω

If resistance is not as specified, replace the IAC valve.

(c) Reconnect the IAC valve connector.

SF0XF–04

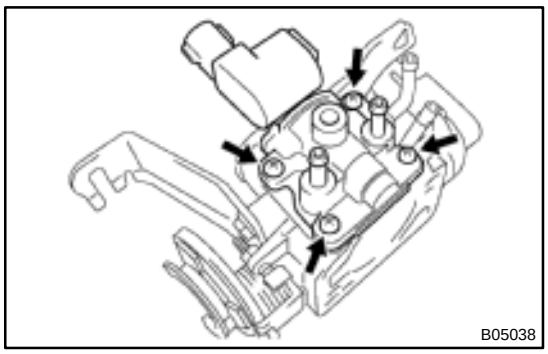

REMOVAL

1. REMOVAL THROTTLE BODY
(See page SF–27)

2. REMOVE IAC VALVE

Remove the 4 screws, IAC valve and gasket.

HINT:

Use a new gasket.

INTAKE AIR TEMPERATURE (IAT) SENSOR

SF0XR–01

COMPONENTS

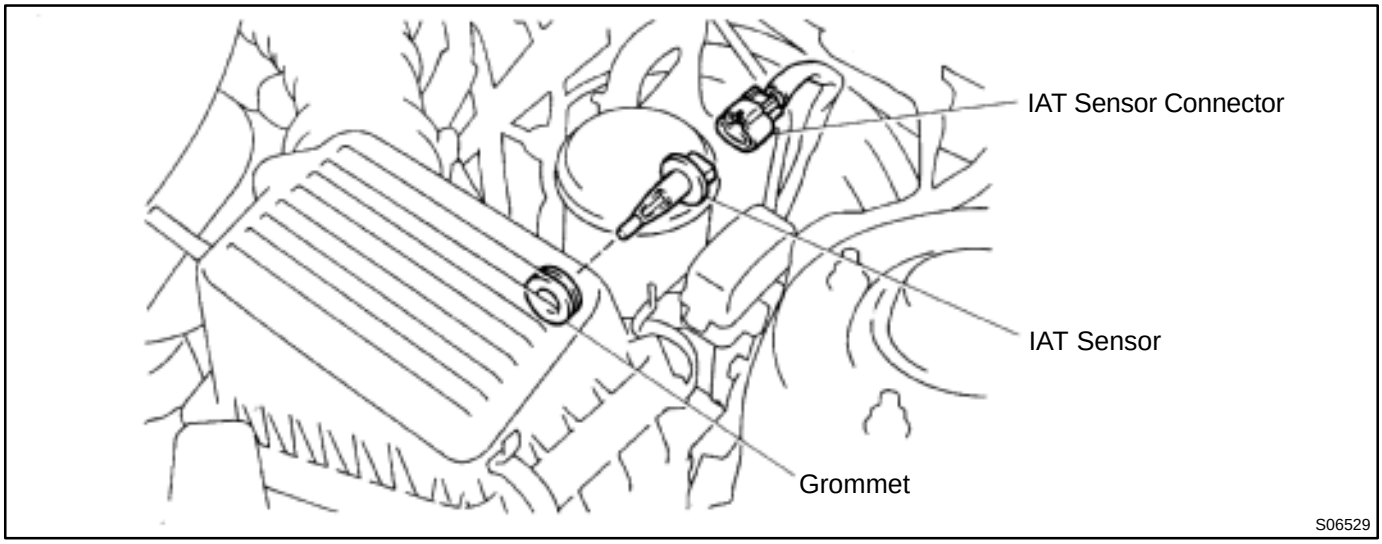

SF0XS–01

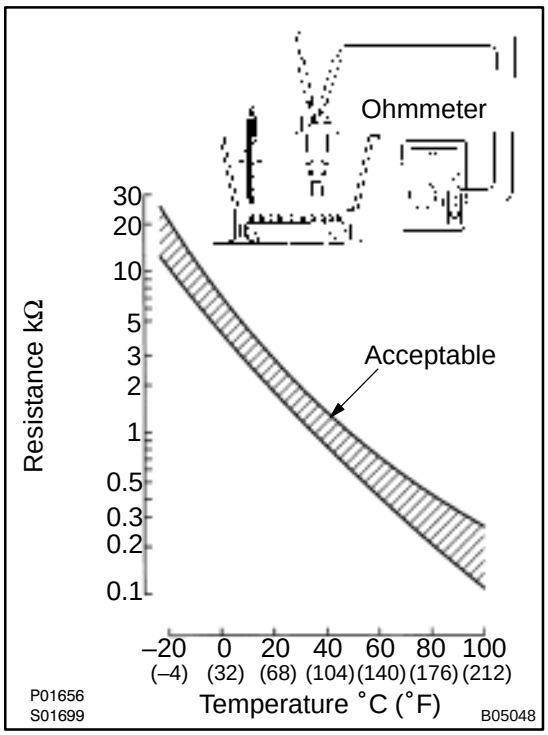

INSPECTION

1. REMOVE IAT SENSOR

2. INSPECT IAT SENSOR

Using an ohmmeter, measure the resistance TAW and E2 between the terminals.

Resistance:

Refer to the graph

If the resistance is not as specified, replace the sensor.

3. REINSTALL IAT SENSOR

SF0X1–04

COMPONENTS

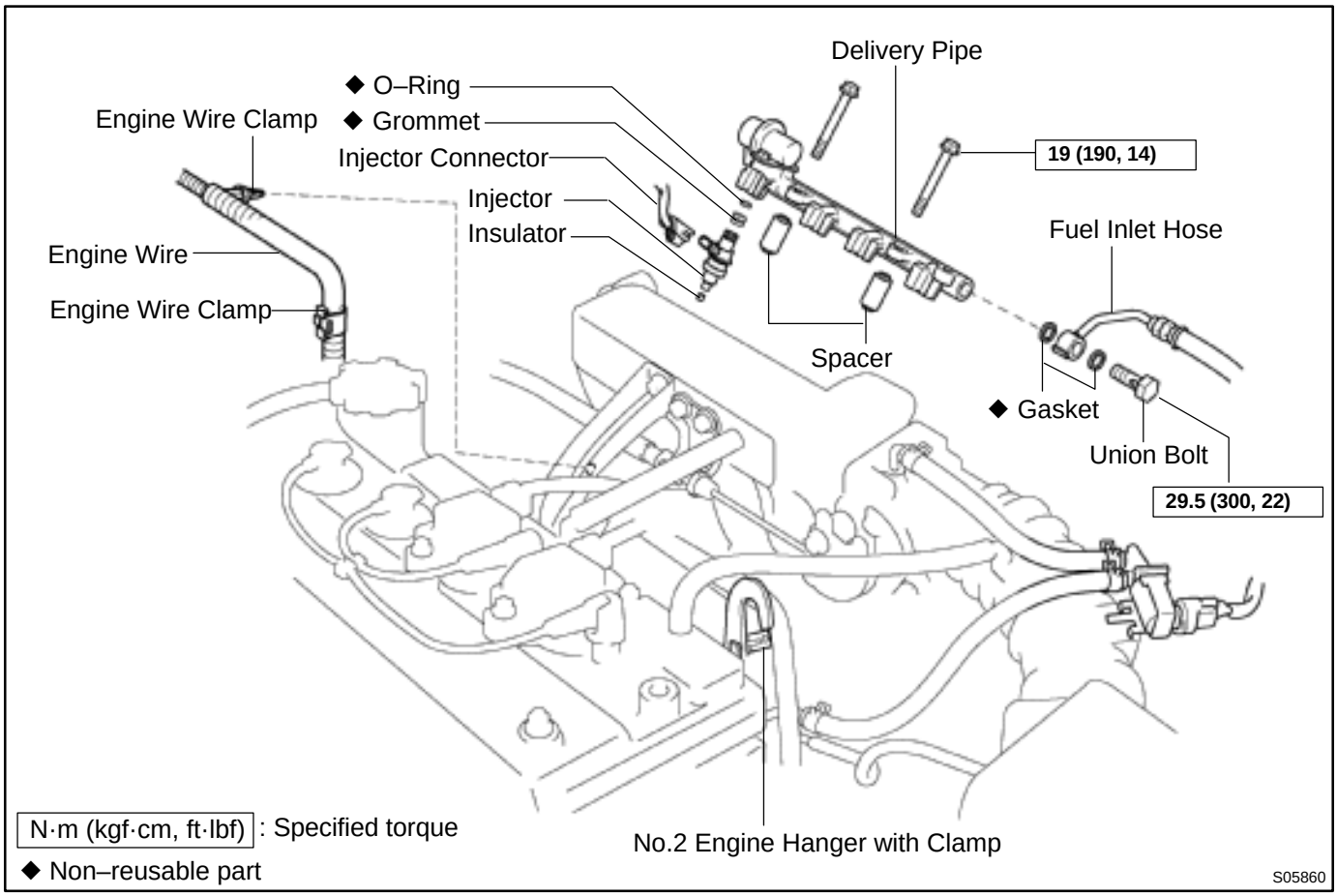

SF0X3–03

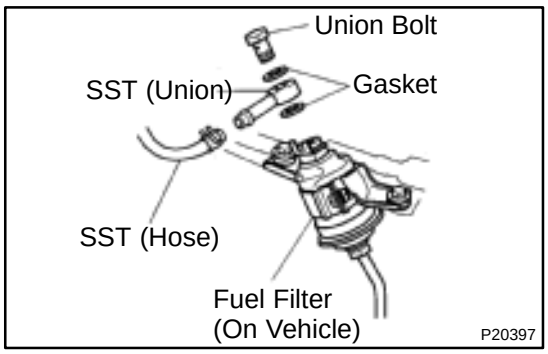

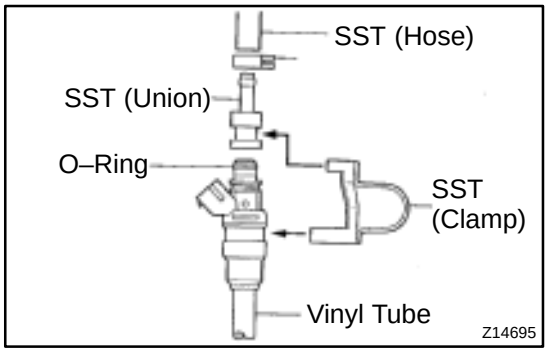

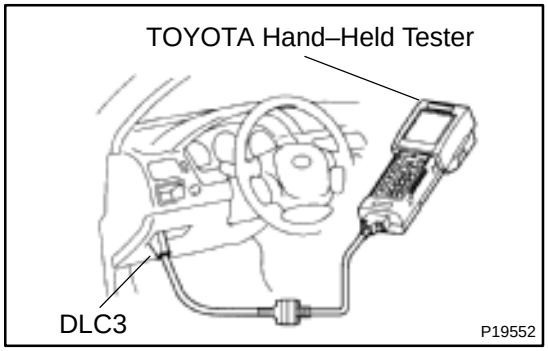

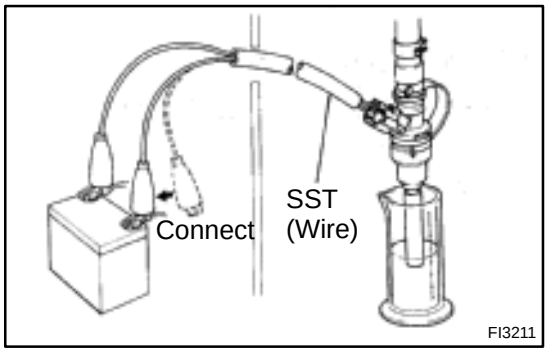

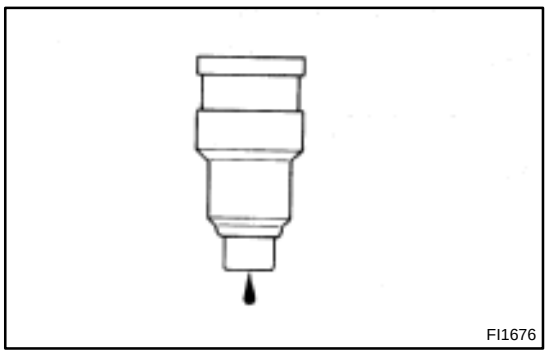

INSPECTION

1. INSPECT INJECTOR INJECTION

CAUTION:

Keep injector clean of sparks during the test.

(a) Remove the union bolt and 2 gaskets, and disconnect the fuel inlet hose from the fuel filter outlet.

(b) Connect SST (union and hose) to the fuel filter outlet with 2 gaskets and union bolts.
SST 09268–41046 (90405–09015)
Torque: 29.5 N·m (300 kgf·cm, 22 ft·lbf)

(c) Install the grommet and a O–ring to the injector.

(d) Connect SST (union and hose) to the injector, and hold the injector and union with SST (clamp).
SST 09268–41046

(e) Put the injector into the graduated cylinder.

CAUTION:

Install a suitable vinyl hose onto the injector to prevent gasoline from splashing out.

(f) Remove the fuse cover on the instrument panel.

(g) Connect the TOYOTA hand–held tester to the DLC3.

(h) Turn the ignition switch ON and TOYOTA hand–held tester main switch ON.

NOTICE:

Do not start the engine.

(i) Select the active test mode on the TOYOTA hand–held tester.

(j) Please refer to the TOYOTA hand–held tester operator's manual for further details.

(k) If you have no TOYOTA hand–held tester, connect the positive (+) and negative (–) leads from the battery to the fuel pump connector.
(See page SF–5)

(l) Connect SST (wire) to the injector and battery for 15 seconds, and measure the injection volume with a graduated cylinder. Test each injector 2 or 3 times.
SST 09842–30070
Volume:
39 – 49 cm^3 (2.4 – 3.0 cu in.) per 15 sec.
Difference between each injector:
5 cm^3 (0.3 cu in.) or less

If the injection volume is not as specified, replace the injector.

2. INSPECT LEAKAGE

(a) In the condition above, disconnect the tester probes of SST (wire) from the battery and check the fuel leakage from the injector.
SST 09842–30070
Fuel drop:
1 drop or less per 3 minutes

(b) Disconnect the negative (–) terminal cable from the battery.
(c) Remove the SST.
SST 09268–41046, 09842–30070
(d) Reconnect the fuel inlet hose to the fuel filter outlet with 2 new gaskets and the union bolt.
Torque: 29.5 N·m (300 kgf·cm, 22 ft·lbf)
(e) Turn the ignition switch OFF.
(f) Disconnect the TOYOTA hand–held tester from the DLC3.
(g) Reinstall the fuse cover on the instrument panel.

SF0X4–01

INSTALLATION

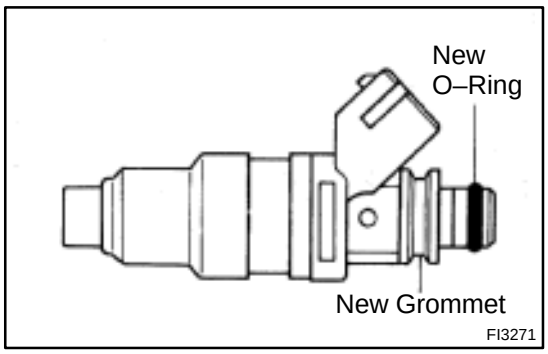

1. INSTALL INJECTORS AND DELIVERY PIPE

(a) Install a new grommet to the injector.

(b) Apply a light coat of gasoline to an O–ring, and install it to the injector.

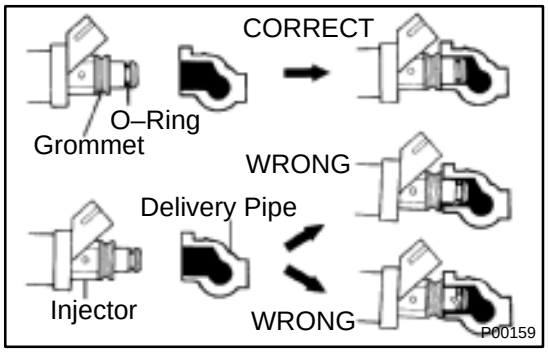

(c) While turning the injector left and right, install it to the delivery pipe. Install the 4 injectors.

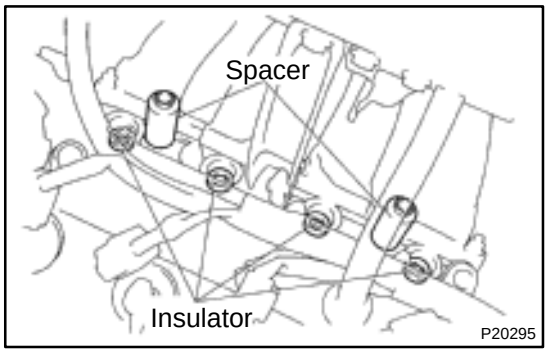

(d) Place the 2 spacers and 4 insulators in position on the cylinder head.

(e) Place the injectors together with the delivery pipe on the cylinder head.

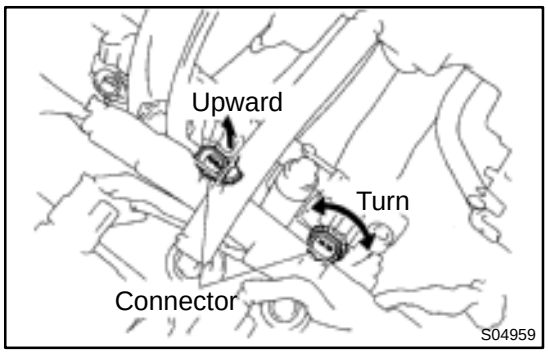

(f) Check that the injectors rotate smoothly.

HINT:

If the injectors do not rotate smoothly, the probable cause is incorrect installation of O–rings. Replace the O–rings.

(g) Position the injector connector upward.

(h) Install the 2 bolts.

Torque: 19 N·m (190 kgf·cm, 14 ft·lbf)

2. CONNECT ENGINE WIRE

(a) Connect the 4 injector connectors.

(b) Connect the engine wire to the surge tank stay.

3. CONNECT FUEL INLET HOSE TO DELIVERY PIPE

(a) Install 2 new gaskets and the inlet hose with the union bolt.

Torque: 30 N·m (300 kgf·cm, 23 ft·lbf)

(b) Connect the engine wire clamp to the No.2 engine hanger.

4. CHECK FOR FUEL LEAKS

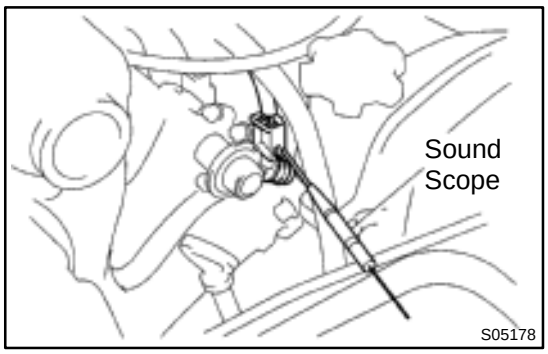

INJECTOR

SF0X0–01

ON–VEHICLE INSPECTION

1. INSPECT INJECTOR OPERATION

Check operation sound from each injector.

(1) With the engine running or cranking, use a sound scope to check that there is a normal operating noise in proportion to engine speed.

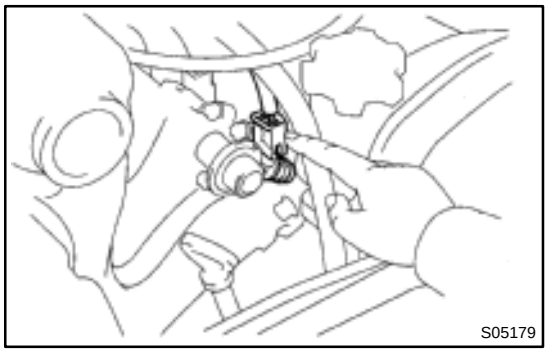

(2) If you have no sound scope, you can check the injector transmission operation with your finger.

If no sound or unusual sound is heard, check the wiring connector, injector or injection signal from the ECM.

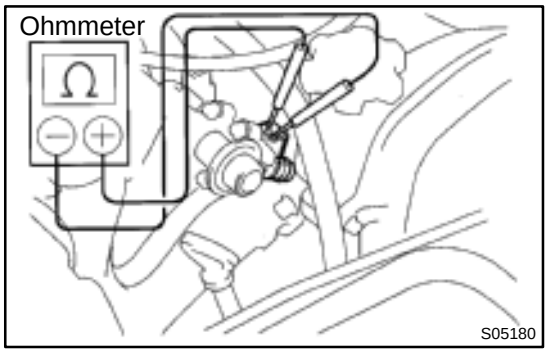

2. INSPECT INJECTOR RESISTANCE

(a) Disconnect the injector connector.

(b) Using an ohmmeter, measure the resistance between the terminals.

Resistance:

13.4 – 14.2 Ω at 20˚C (68˚F)

If the resistance is not as specified, replace the injector.

(c) Reconnect the injector connector.

SF0X2–01

REMOVAL

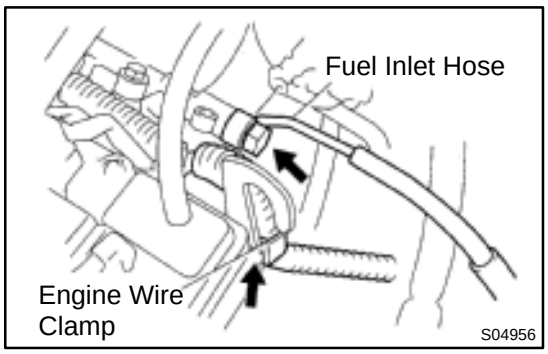

1. DISCONNECT FUEL INLET HOSE FROM DELIVERY PIPE

(a) Disconnect the engine wire clamp from the No.2 engine hanger.

(b) Remove the union bolt, 2 gaskets and inlet hose.

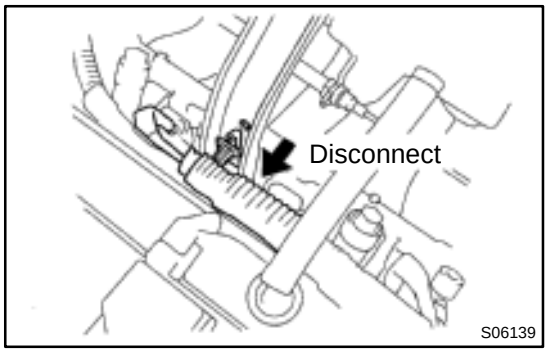

2. DISCONNECT ENGINE WIRE

(a) Disconnect the engine wire from the air intake chamber stay.

(b) Disconnect the 4 injector connectors.

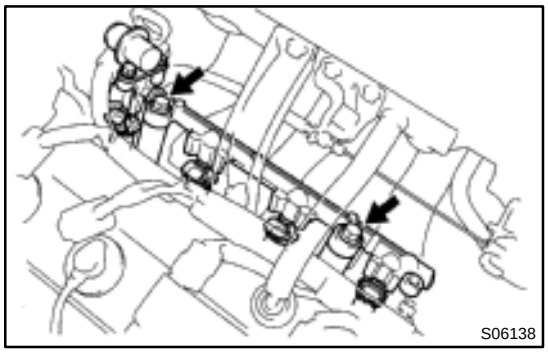

3. REMOVE DELIVERY PIPE WITH INJECTORS

(a) Remove the 2 bolts and delivery pipe together with the 4 injectors.

NOTICE:

Be careful not to drop the injectors when removing the delivery pipe.

(b) Pull out the 4 injectors from the delivery pipe.

(c) Remove the 2 spacers and 4 insulators from the cylinder head.

(d) Remove the O–ring and grommet from each injector.

KNOCK SENSOR

COMPONENTS

SF0WM–01

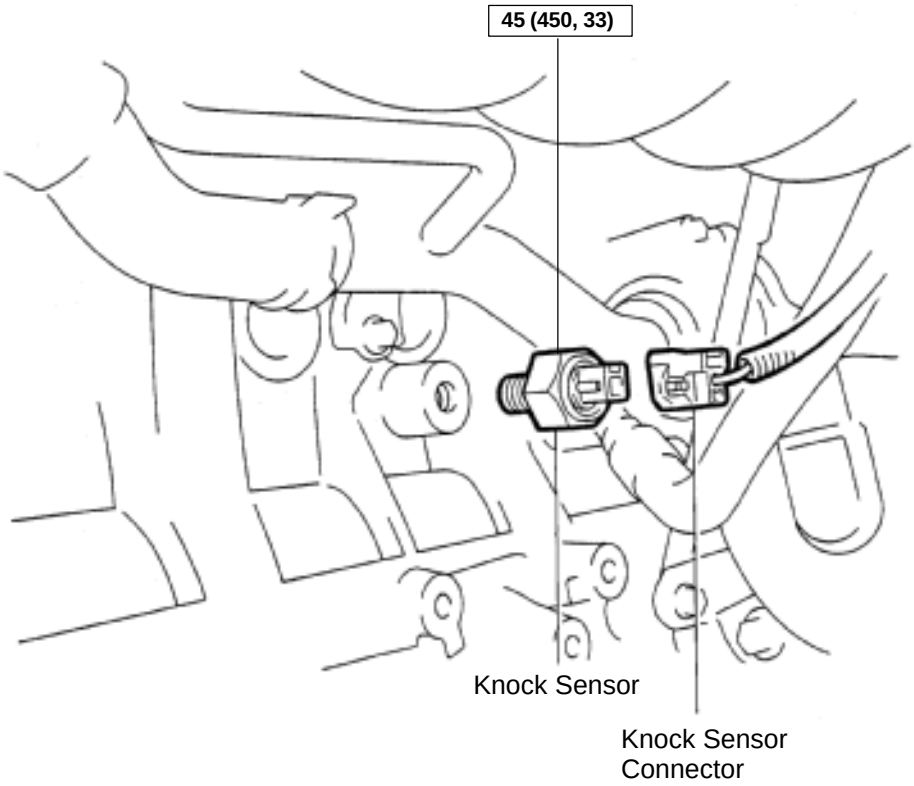

N·m (kgf·cm, ft·lbf) : Specified torque

P20326

SF0WN–01

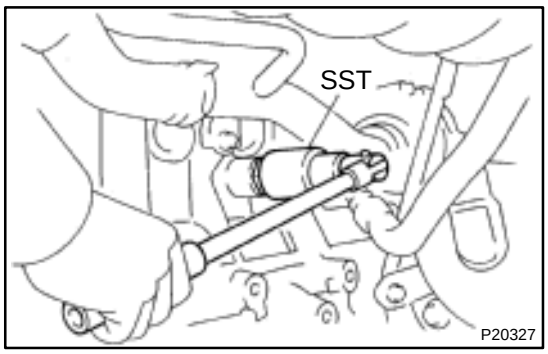

INSPECTION

1. REMOVE KNOCK SENSOR

(a) Disconnect the knock sensor connector.

(b) Using SST, remove the knock sensor.

SST 09816–30010

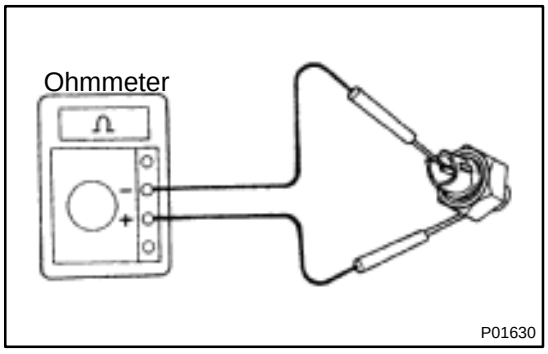

2. INSPECT KNOCK SENSOR

Using an ohmmeter, check that there is no continuity between the terminal and body.

If there is continuity, replace the sensor.

3. REINSTALL KNOCK SENSOR

Torque: 45 N·m (450 kgf·cm, 33 ft·lbf)

MANIFOLD ABSOLUTE PRESSURE (MAP) SENSOR

SF0WO–01

COMPONENTS

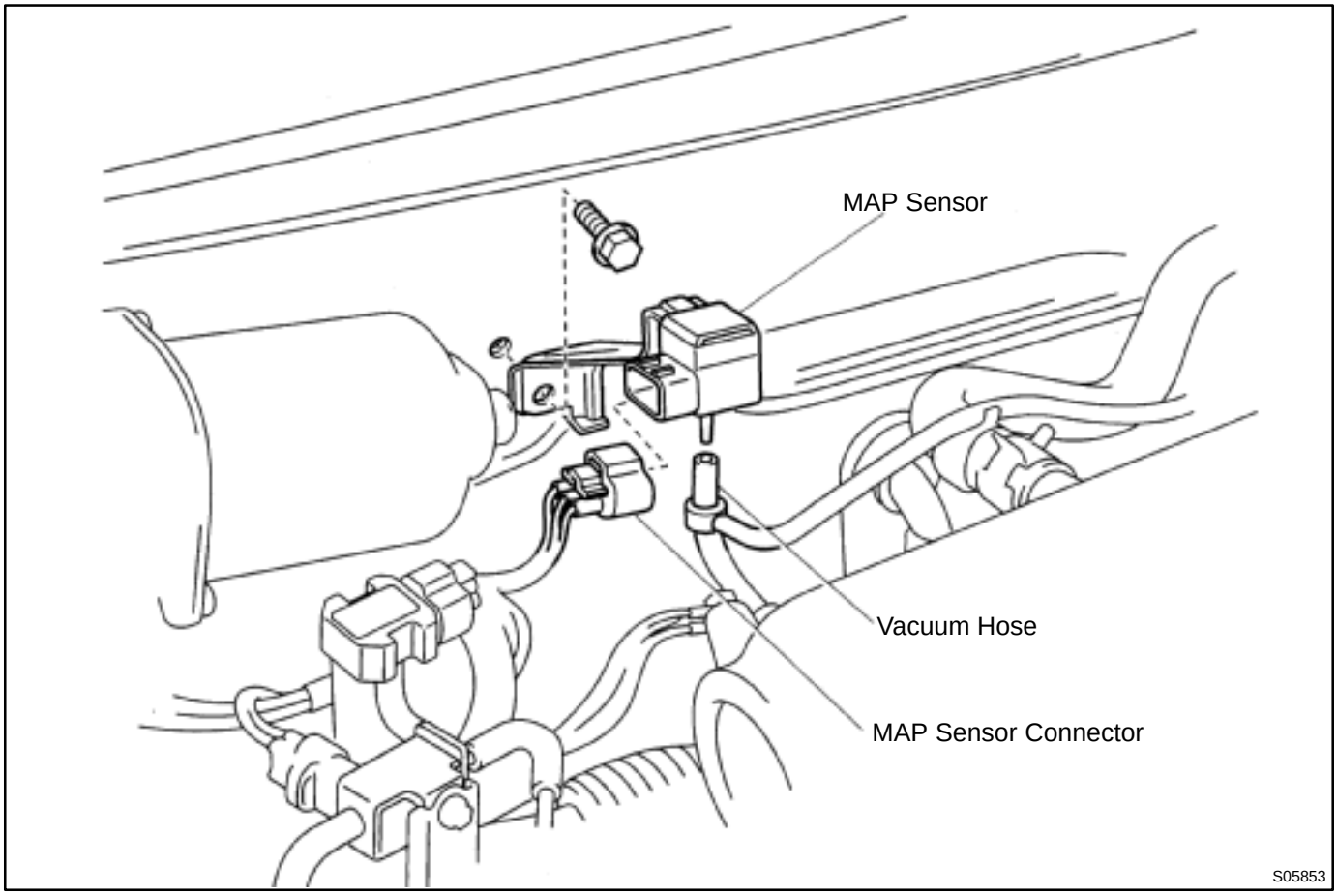

SF0WP–01

INSPECTION

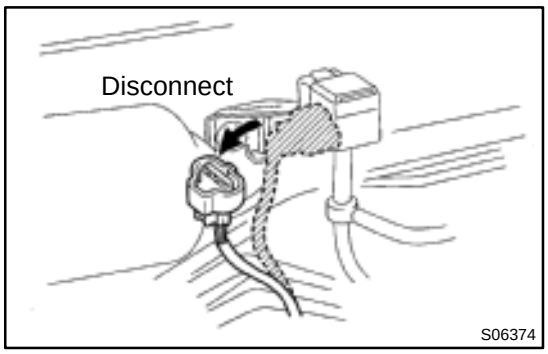

1. INSPECT POWER SOURCE VOLTAGE OF MAP SENSOR

(a) Disconnect the MAP sensor connector.

(b) Turn the ignition switch ON.

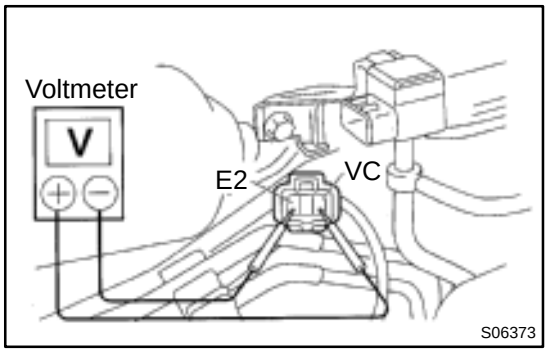

(c) Using a voltmeter, measure the voltage between connector terminals VC and E2 of the wiring harness side.

Voltage:
4.5 – 5.5 V

(d) Turn the ignition switch to LOCK.

(e) Reconnect the MAP sensor connector.

2. INSPECT POWER OUTPUT OF MAP SENSOR

(a) Turn the ignition switch ON.

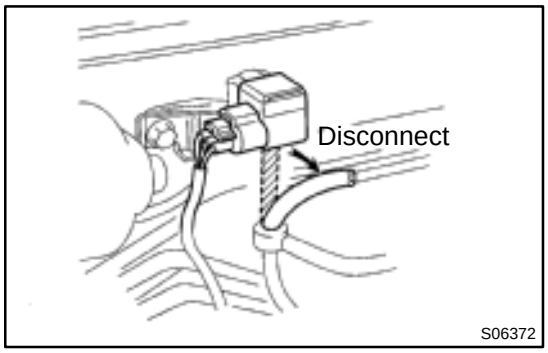

(b) Disconnect the vacuum hose from the MAP sensor.

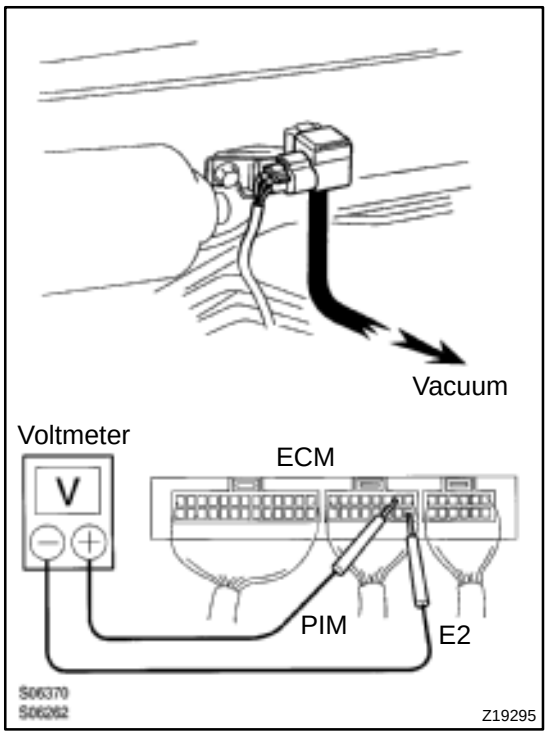

(c) Connect a voltmeter to terminals PIM and E2 of the ECM, and measure the output voltage under ambient atmospheric pressure.

(d) Apply vacuum to the MAP sensor in 13.3 kPa (100 mmHg, 3.94 in.Hg) segments to 66.7 kPa (500 mmHg, 19.69 in.Hg).

(e) Measure the voltage drop from step (c) above for each segment.

Voltage Drop:

Applied Vacuum kPa (mmHg, in.Hg)	13.3 (100, 3.94)	26.7 (200, 7.87)	40.0 (300, 11.81)	53.5 (400, 15.75)	66.7 (500, 19.69)
Voltage drop V	0.3 – 0.5	0.7 – 0.9	1.1 – 1.3	1.5 – 1.7	1.9 – 2.1

(f) Reconnect the vacuum hose to the MAP sensor.

SFI SYSTEM

SF0WQ–04

PRECAUTION

1. BEFORE WORKING ON FUEL SYSTEM, DISCONNECT NEGATIVE (–) TERMINAL CABLE FROM BATTERY

HINT:

Any diagnostic trouble code retained by the computer will be erased when the negative (–) terminal cable is removed from the battery.

Therefore, if necessary, read the diagnosis before removing the negative (–) terminal cable from the battery.

2. DO NOT SMOKE OR WORK NEAR AN OPEN FLAME WHEN WORKING ON THE FUEL SYSTEM

3. KEEP GASOLINE AWAY FROM RUBBER OR LEATHER PARTS

4. MAINTENANCE PRECAUTIONS

(a) In event of engine misfire, these precautions should be taken.
  (1) Check proper connection to battery terminals, etc.
  (2) After repair work, check that the ignition coil terminals and all other ignition system lines are reconnected securely.
  (3) When cleaning the engine compartment, be especially careful to protect the electrical system from water.

(b) Precautions when handling the oxygen sensor.
  (1) Do not allow oxygen sensor to drop or hit against an object.
  (2) Do not allow the sensor to come into contact with water.

5. IF VEHICLE IS EQUIPPED WITH MOBILE RADIO SYSTEM (HAM, CB, ETC.)

If the vehicle is equipped with a mobile communication system, refer to the precaution in the IN section.

6. AIR INDUCTION SYSTEM

(a) Separation of the engine oil dipstick, oil filler cap, PCV hose, etc. may cause the engine to run out of tune.

(b) Disconnection, looseness or cracks in the parts of the air induction system between the throttle body and cylinder head will allow air suction and cause the engine to run out of tune.

7. ELECTRONIC CONTROL SYSTEM

(a) Before removing SFI wiring connectors, terminals, etc., first disconnect the power by either turning the ignition switch to LOCK or disconnecting the negative (–) terminal cable from the battery.

(b) When installing the battery, be especially careful not to incorrectly connect the positive (+) and negative (–) cables.
(c) Do not permit parts to receive a severe impact during removal or installation. Handle all SFI parts carefully, especially the ECM.
(d) Do not be careless during troubleshooting as there are numerous transistor circuits and contact with terminals can cause further trouble.
(e) Do not open the ECM cover.
(f) When inspecting during rainy weather, take care to prevent the entry of water. Also, when washing the engine compartment, prevent water from getting on the SFI parts and wiring connectors.
(g) Parts should be replaced as an assembly.
(h) Care is required when pulling out and inserting wiring connectors.
(i) Release the lock and pull out the connector, pulling on the connectors.
(j) Fully insert the connector and check that it is locked.

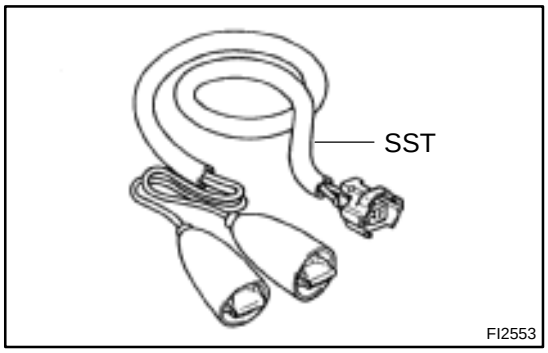

(k) When inspecting a connector with a volt/ohmmeter.
(l) Carefully take off the water–proofing rubber if it is a water–proof type connector.
(m) Insert the tester probe into the connector from the wiring side when checking the continuity, amperage or voltage.
(n) Do not apply unnecessary force to the terminal.
(o) After checking, install the water–proofing rubber securely on the connector.
(p) Use SST for inspecting or testing the injector or its wiring connector.
SST 09842–30070

8. FUEL SYSTEM

(a) When disconnecting the high fuel pressure line, a large amount of gasoline will spill out, so observe these procedures:
(1) Disconnect the fuel pump connector.
(2) Start the engine. After the engine has stopped on its own, turn the ignition switch OFF.

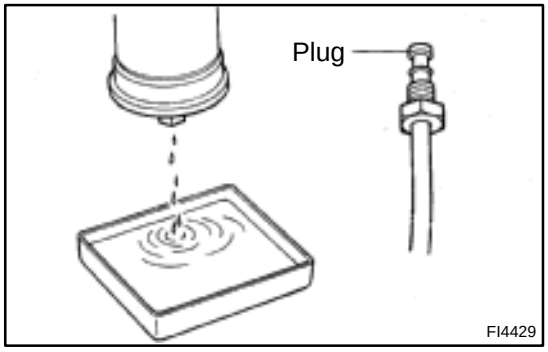

(3) Put a container under the connection.
(4) Slowly loosen the connection.
(5) Disconnect the connection.
(6) Plug the connection with a rubber plug.
(7) Reconnect the fuel pump connector.

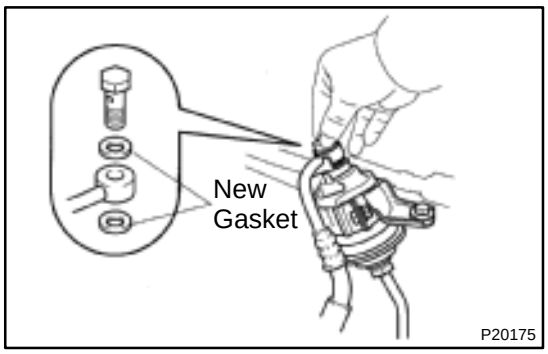

(b) When connecting the union bolt on the high pressure pipe union, observe these procedures:
(1) Always use 2 new gaskets.
(2) Tighten the union bolt by hand.
(3) Tighten the union bolt to the specified torque.
Torque: 29.5 N·m (300 kgf·cm, 22 ft·lbf)

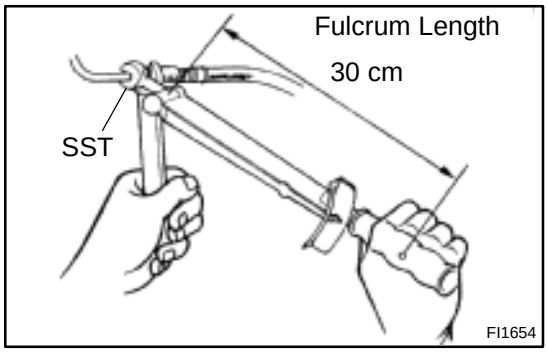

(c) When connecting the flare nut on the high pressure pipe union, observe these procedures:
(1) Apply a light coat of engine oil to the flare nut, and tighten the flare nut by hand.
(2) Using SST, tighten the flare nut to specified torque.
SST 09631–22020

NOTICE:
Do not rotate the fuel pipe, when tightening the flare nut.
Torque: 30 N·m (300 kgf·cm, 23 ft·lbf)

HINT:
Use a torque wrench with a fulcrum length of 30 cm (11.81 in.).

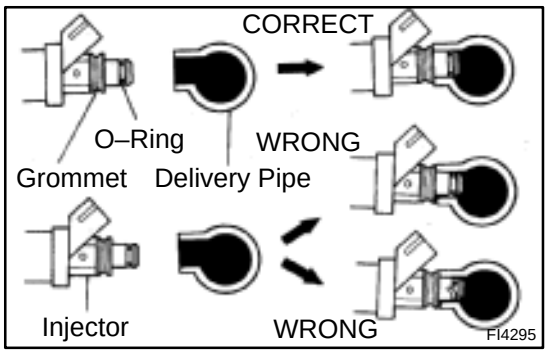

(d) Observe these precautions when removing and installing the injectors.
(1) Never reuse the O–ring.
(2) When placing a new O–ring on the injector, take care not to damage it in any way.
(3) Coat a new O–ring with spindle oil or gasoline before installing–never use engine, gear or brake oil.

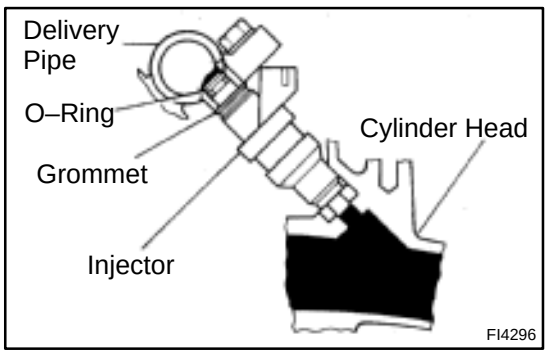

(e) Install the injector in the delivery pipe and cylinder head as shown in the illustration.

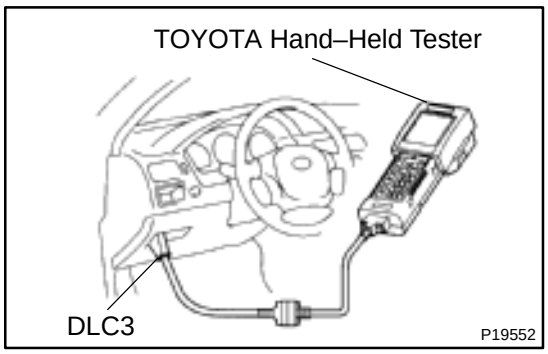

(f) Check that there are no fuel leaks after performing maintenance anywhere on the fuel system.
  (1) Remove the fuse cover on the instrument panel.
  (2) Connect the TOYOTA hand–held tester to the DLC3.
  (3) Turn the ignition switch ON and TOYOTA hand–held tester main switch ON.

NOTICE:
Do not start the engine.

  (4) Select the active test mode on the TOYOTA hand–held tester.
  (5) Please refer to the TOYOTA hand–held tester operator's manual for further details.
  (6) If you have no TOYOTA hand–held tester, connect the positive (+) and negative (–) leads from the battery to the fuel pump connector.
  (See page SF–5)
  (7) Check that there are no leaks from any part of the fufel system.
  (8) Turn the ignition switch to LOCK.
  (9) Disconnct the TOYOTA hand–held tester from the DLC3.
  (10) Install the fuse cover on the instrument panel.
  (11) Start the engine.

NOTICE:
Keep cranking the engine until the air is removed from the fuel line.

(g) After the engine starts, check again that there are no fuel leaks.

SF0X9–04

COMPONENTS

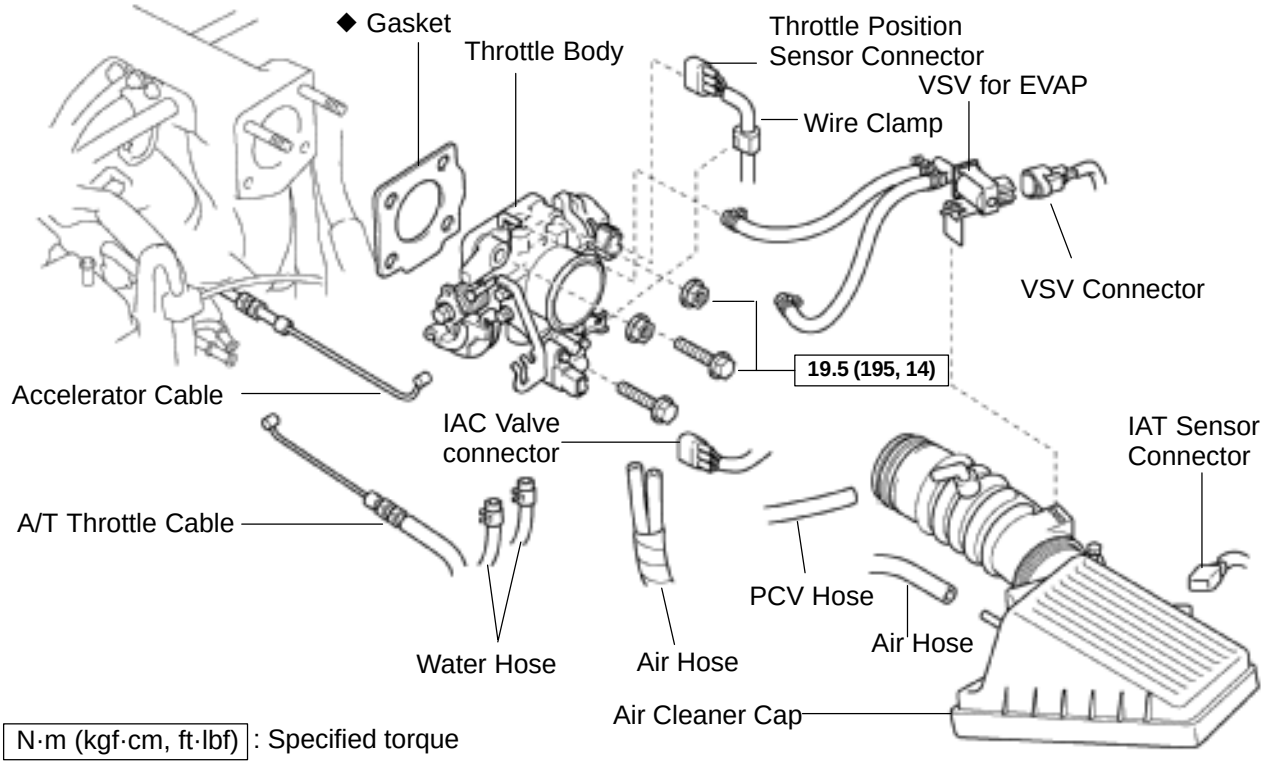

N·m (kgf·cm, ft·lbf) : Specified torque

◆ Non–reusable part

B05033

SF0XB–01

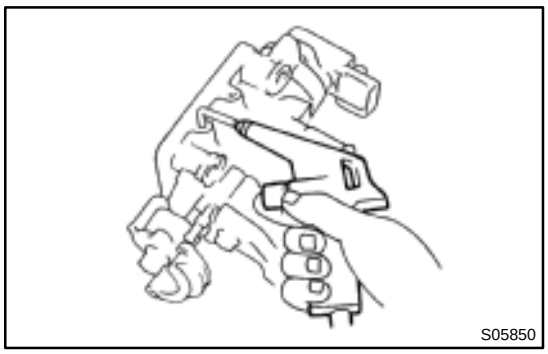
S05850

INSPECTION

1. CLEAN THROTTLE BODY

(a) Wash and clean the cast part with a soft brush and carburetor cleaner.

(b) Using compressed air, blow all passages and apertures in the throttle body.

NOTICE:

To prevent deterioration, do not clean the throttle position senser.

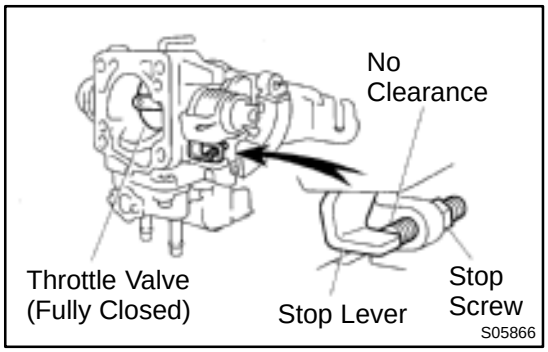

S05866

2. INSPECT THROTTLE VALVE

Check that there is no clearance between the throttle stop screw and throttle lever when the throttle valve is fully closed.

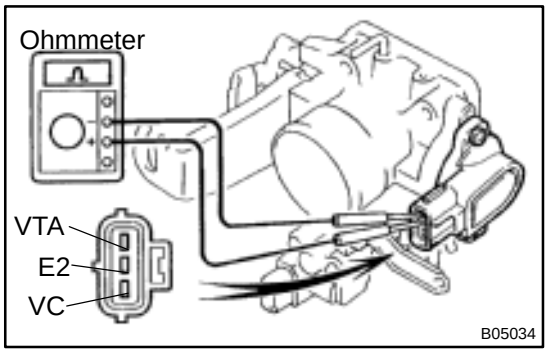

B05034

3. INSPECT THROTTLE POSITION SENSOR

Using an ohmmeter, measure the resistance between each terminal.

Throttle valve condition	Between terminals	Resistance
Fully closed	VTA – E2	0.2 – 5.7 kΩ
Fully opend	VTA – E2	2.0 – 10.2 kΩ
–	VC – E2	2.5 – 5.9 kΩ

SF0XC–01

INSTALLATION

Installation is in the reverse order of removal. (See page SF–27)

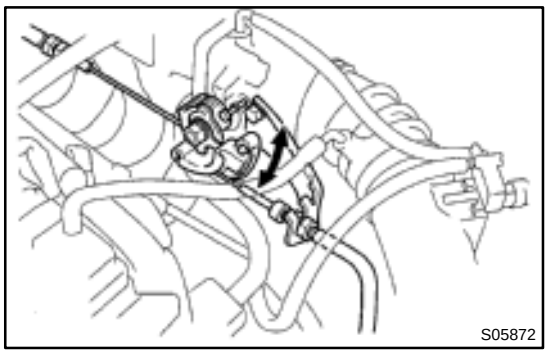

THROTTLE BODY

SF0X8–01

ON–VEHICLE INSPECTION

1. INSPECT THROTTLE BODY

(a) Check that the throttle linkage moves smoothly.

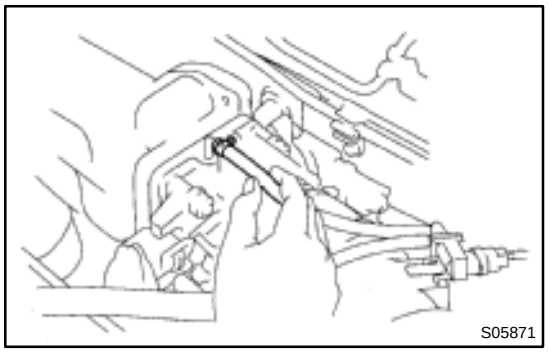

(b) Check the vacuum at port.
- Start the engine.
- Check the vacuum with your finger.

At idle	Other than idle
No vacuum	Vacuum

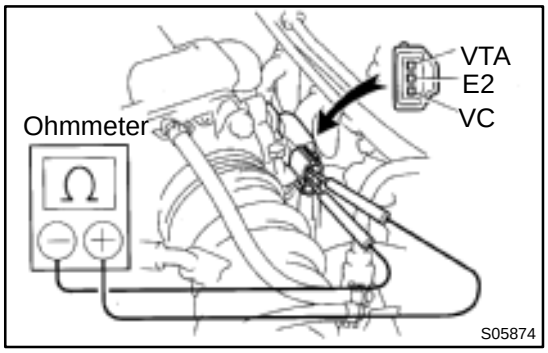

2. INSPECT THROTTLE POSITION SENSOR

(a) A/T:
Disconnect the throttle cable from the linkage.

(b) Disconnect the sensor connector.

(c) Using an ohmmeter, measure the resistance between each terminal.

Throttle valve condition	Between terminals	Resistance
Fully closed	VTA – E2	0.2 – 5.7 kΩ
Fully opened	VTA – E2	2.0 – 10.2 kΩ
–	VC – E2	2.5 – 5.9 kΩ

(d) Reconnect the sensor connector.

(e) A/T:
Reconnect the throttle cable.

SF0XA–01

REMOVAL

1. DRAIN ENGINE COOLANT

2. REMOVE AIR CLEANER CAP

(a) Disconnect these connectors and hoses:
- IAT sensor connector
- VSV connector
- PCV hose
- EVAP hose

(b) Disconnect the VSV for EVAP, and remove the air cleaner cap.

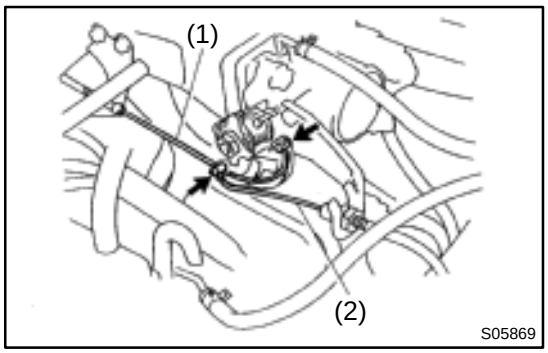

3. DISCONNECT CONTROL CABLES FROM THROTTLE BODY

Disconnect these cables:
(1) Accelerator cable
(2) A/T throttle cable

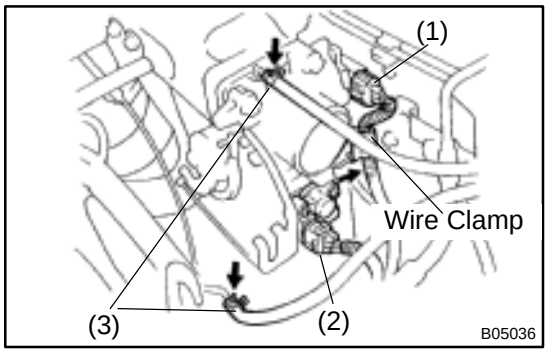

4. REMOVE THROTTLE BODY

(a) Disconnect these connectors and hoses:
(1) Throttle position sensor connector and wire clamp
(2) IAC valve connector
(3) EVAP hoses

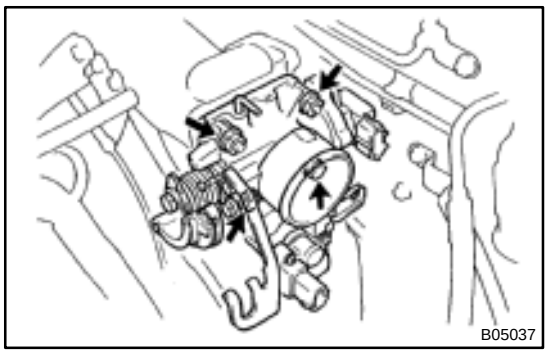

(b) Remove the 2 nuts and 2 bolts.
Torque: 19.5 N·m (195 kgf·cm, 14 ft·lbf)

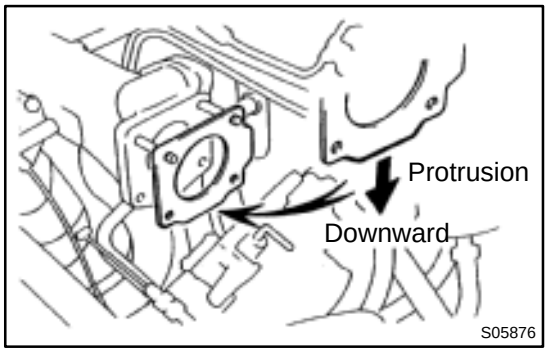

(c) Disconnect the throttle body from the intake manifold.

(d) Remove the gasket.

HINT:

Attach a new gasket to the intake manifold, facing the protrusion downward.

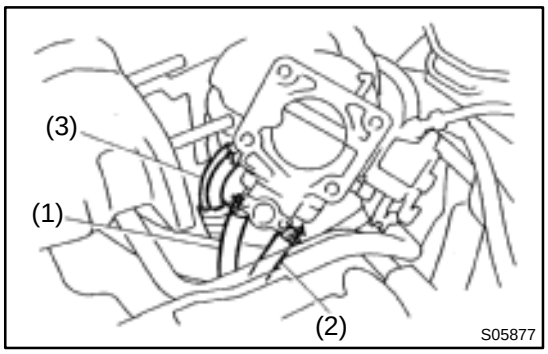

(e) Disconnect these hoses from the throttle body, and remove the throttle body:
  (1) Water bypass hose (from water bypass pipe)
  (2) Water bypass hose (from water outlet)
  (3) Air hoses (from PS air control valve)

VSV FOR EVAPORATIVE EMISSION (EVAP)

COMPONENTS

SF0XL–01

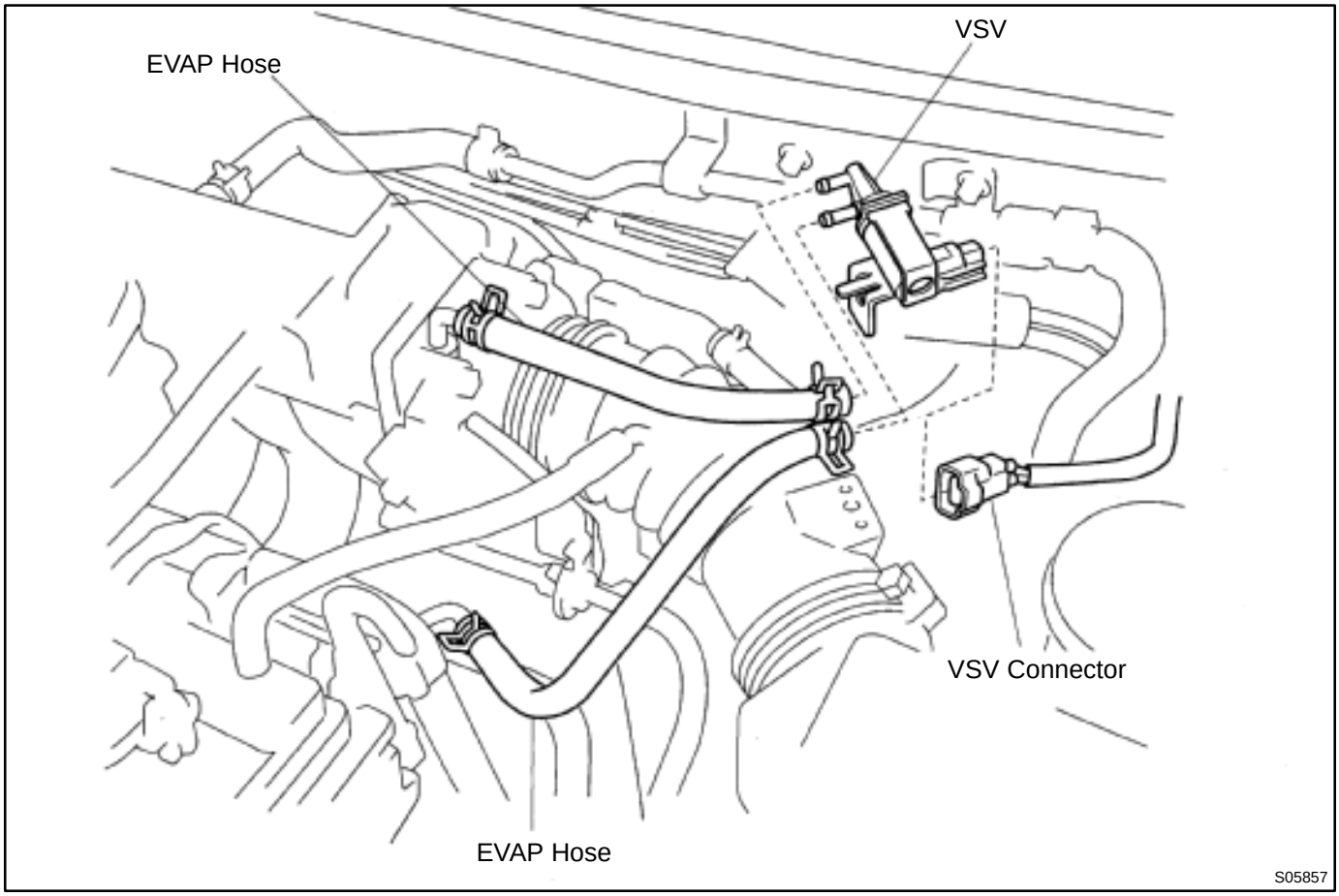

SF0XM–04

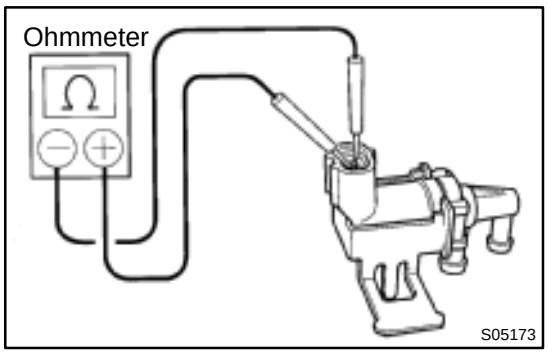

INSPECTION

1. REMOVE VSV

2. INSPECT VSV FOR OPEN CIRCUIT

Using an ohmmeter, check that there is continuity between the terminals.

Resistance:

30 – 34 Ω at 20˚C (68˚F)

If there is no continuity, replace the VSV.

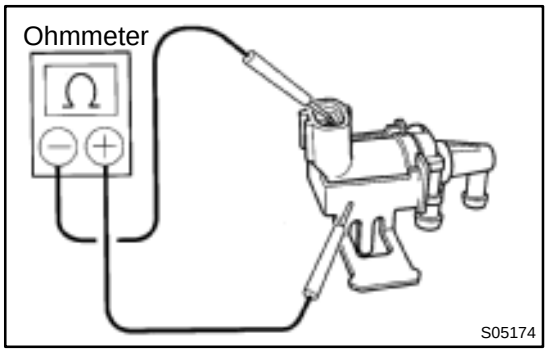

3. INSPECT VSV FOR GROUND

Using an ohmmeter, check that there is no continuity between each terminal and the body.

If there is continuity, replace the VSV.

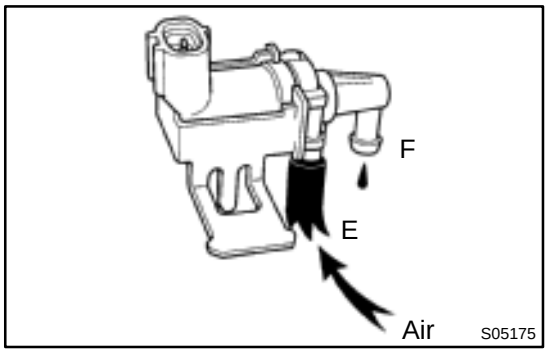

4. INSPECT VSV OPERATION

(a) Check that air does not flow from ports E to F.

NOTICE:

Never apply more than 60 kPa (0.61 kgf/cm^2, 8.7 psi) of pressure compressed air to the VSV.

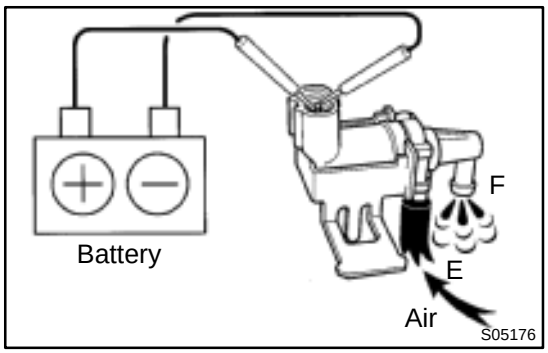

(b) Apply battery positive voltage across the terminals.

(c) Check that air flows from ports E to F.

If operation is not as specified, replace the VSV.

5. REINSTALL VSV

VSV FOR VAPOR PRESSURE SENSOR

SF0XN–01

COMPONENTS

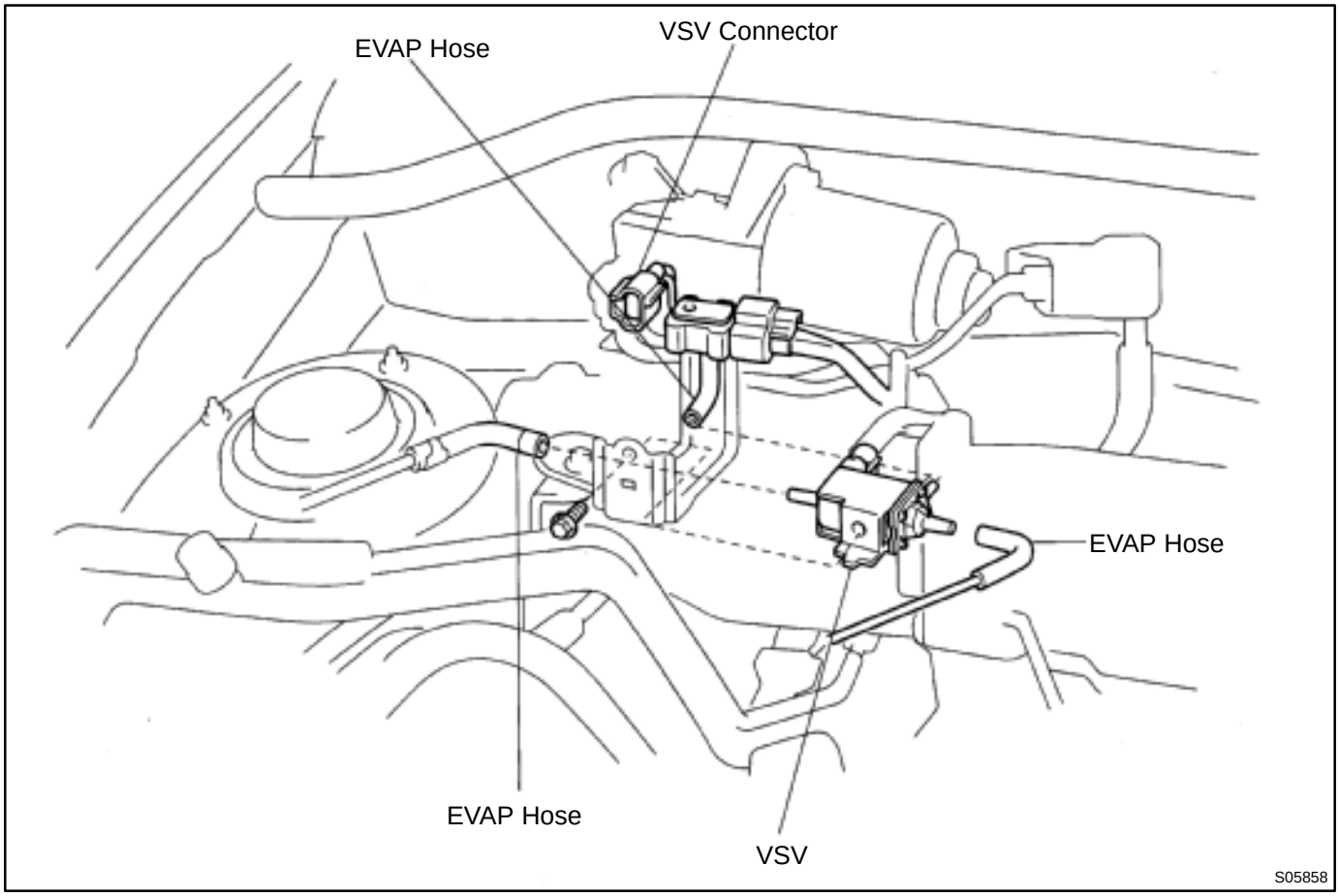

SF0XO–04

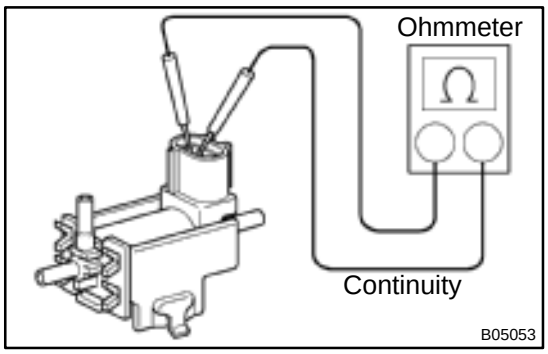

INSPECTION

1. REMOVE VSV

2. INSPECT VSV FOR OPEN CIRCUIT

Using an ohmmeter, check that there is continuity between the terminals.

Resistance:

33 – 39 Ω at 20˚C (68˚F)

If there is no continuity, replace the VSV.

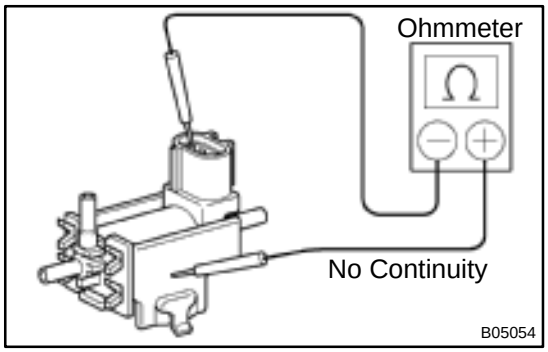

3. INSPECT VSV FOR GROUND

Using an ohmmeter, check that there is no continuity between each terminal and the body.

If there is continuity, replace the VSV.

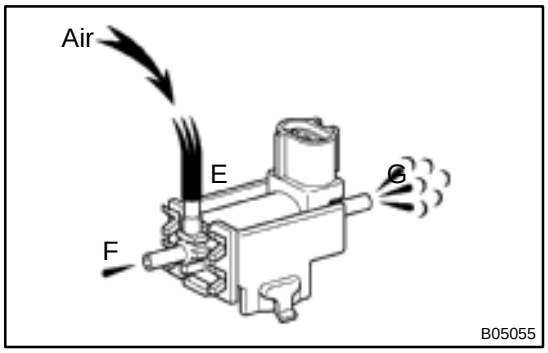

4. INSPECT VSV OPERATION

(a) Check that the air flows from ports E to G.

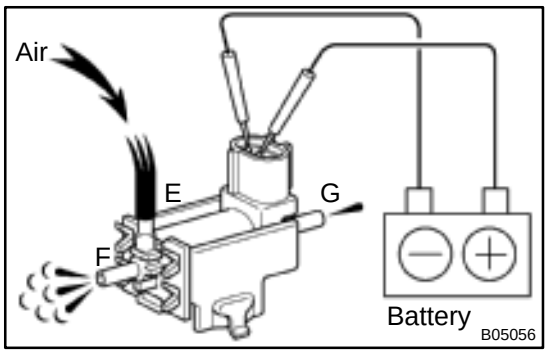

(b) Apply battery positive voltage across the terminals.

(c) Check that the air flows from ports E to F.

If operation is not as specified, replace the VSV.

5. REINSTALL VSV

VAPOR PRESSURE SENSOR

COMPONENTS

SF0WF–01

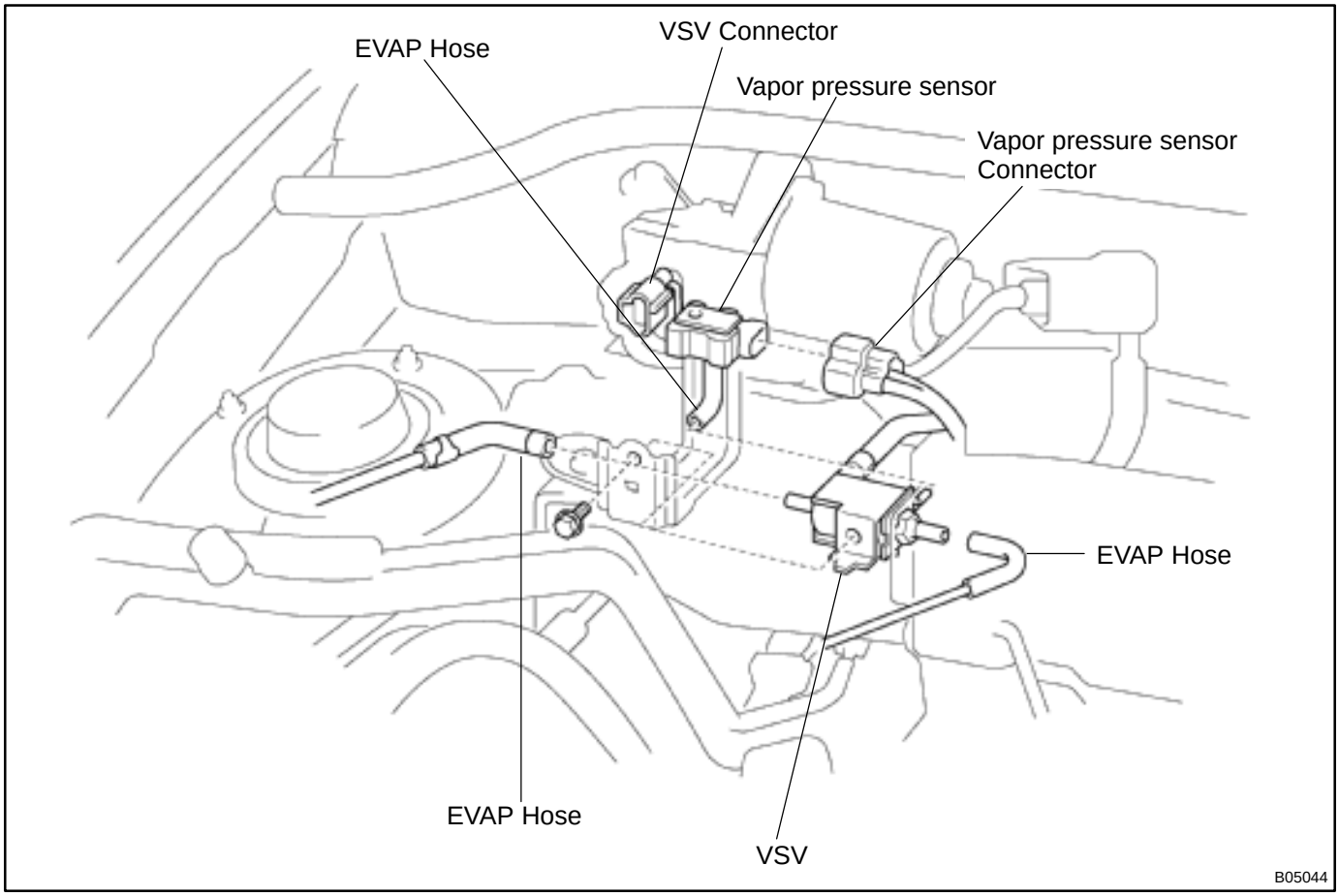

SF0WG–01

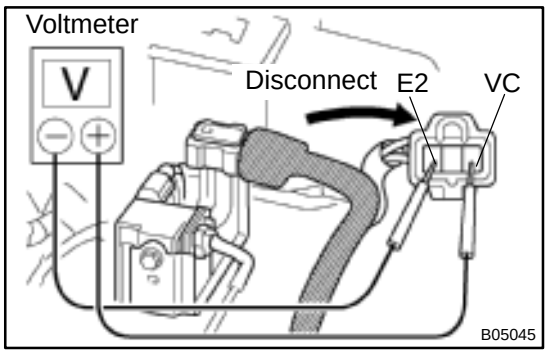

INSPECTION

1. INSPECT POWER SOURCE VOLTAGE OF VAPOR PRESSURE SENSOR

(a) Disconnect the vapor pressure sensor connector.

HINT:

Near the fuel tank.

(b) Turn the ignition switch ON.

(c) Using a voltmeter, measure the voltage between connector terminals VC and E2 of the wiring harness side.

Voltage: 4.5 – 5.5 V

(d) Turn the ignition switch to LOCK.

(e) Reconnect the vapor pressure sensor connector.

2. INSPECT POWER OUTPUT OF VAPOR PRESSURE SENSOR

(a) Turn the ignition switch ON.

(b) Disconnect the vacuum hose from the vapor pressure sensor.

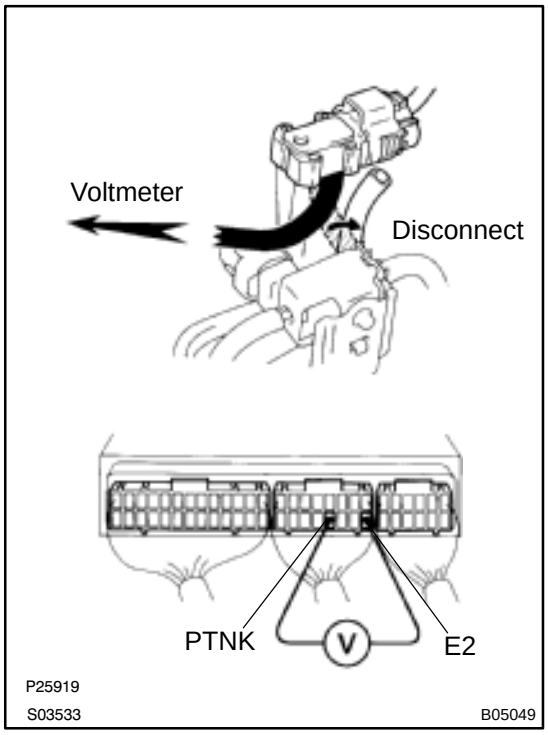

(c) Connect a voltage to terminals PTNK and E2 of the ECM, and measure the output voltage under the following connectors:

- Apply vacuum (2.0 kPa, 15 mmHg, 0.59 in.Hg) to the vapor pressure sensor.

Voltage: 1.3 – 2.1 V

- Release the vacuum from the vapor pressure sensor.

Voltage: 3.0 – 3.6 V

- Apply pressure (1.5 kPa, 15gf/cm^2, 0.22 psi) to the vapor pressure sensor.

Voltage: 4.2 – 4.8 V

(d) Disconnect the vacuum hose to the vapor pressure sensor.

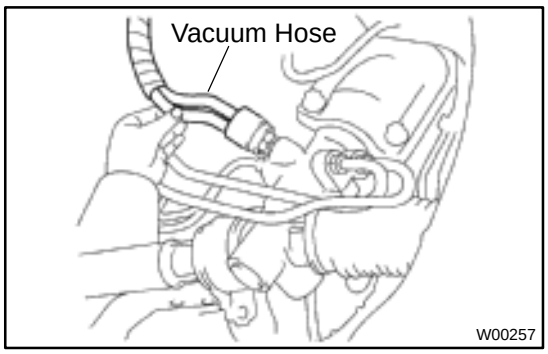

AIR CONTROL VALVE

SR0L9–01

INSPECTION

1. TURN AIR CONDITIONING SWITCH OFF

2. CHECK IDLE–UP

(a) Start the engine and run it at idle.

(b) Fully turn the steering wheel.

(c) Check that the engine rpm decreases when the vacuum hose is pinched.

(d) Check that the engine rpm increases when the hose is released.

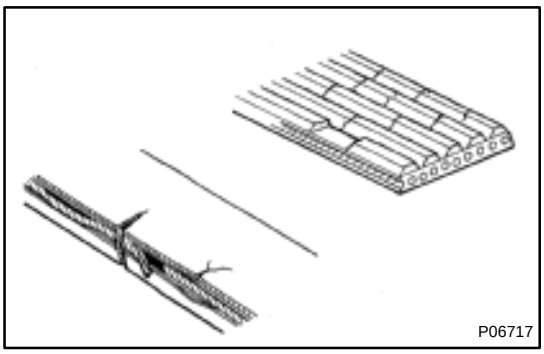

DRIVE BELT

SR0L6–01

INSPECTION

INSPECT DRIVE BELT

(a) Visually check the belt for excessive wear, frayed cords etc.

If any defect has been found, replace the drive belt.

HINT:

Cracks on the rib side of a belt are considered acceptable. If the missing chunks from the ribs are found on the belt, it should be replaced.

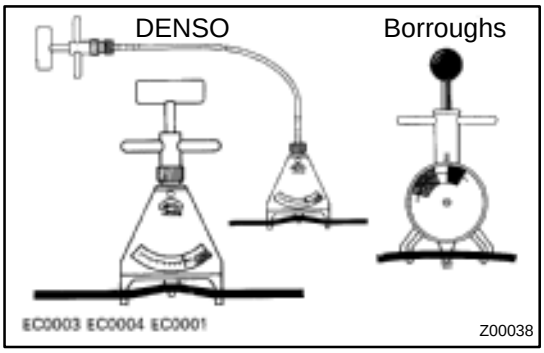

(b) Using a belt tension gauge, measure the belt tension.

Belt tension gauge:
DENSO BTG–20 (95506–00020) or
Borroughs No. BT–33–73F
Drive belt tension:
New belt: 140 – 180 lbf
Used belt: 80 – 120 lbf

If the belt tension is not as specified, adjust it.

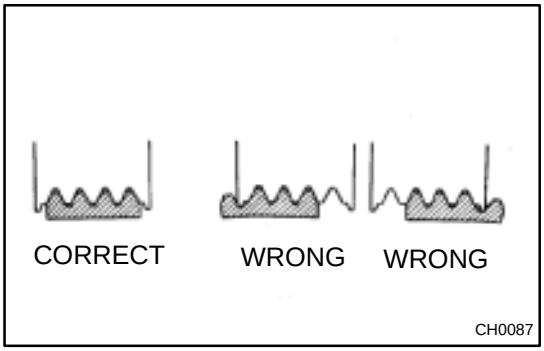

HINT:

- ”New belt” refers to a belt which has been used less than 5 minutes on a running engine.
- ”Used belt” refers to a belt which has been used on a running engine for 5 minutes or more.
- After installing a belt, check that it fits properly in the ribbed grooves.
- Check with your hand to confirm that the belt has not slipped out of the groove on the bottom of the pulley.
- After installing a new belt, run the engine for about 5 minutes and recheck the belt tension.

POWER STEERING FLUID

SR0L7–01

BLEEDING

1. CHECK FLUID LEVEL
(See page SR–5)

2. JACK UP FRONT OF VEHICLE AND SUPPORT IT WITH STANDS

3. TURN STEERING WHEEL

With the engine stopped, turn the wheel slowly from lock to lock several times.

4. LOWER VEHICLE

5. START ENGINE

Run the engine at idle for a few minutes.

6. TURN STEERING WHEEL

(a) With the engine idling, turn the wheel to left or right full lock position and keep it there for 2–3 seconds, then turn the wheel to the opposite full lock position and keep it there for 2–3 seconds.

(b) Repeat (a) several times.

7. STOP ENGINE

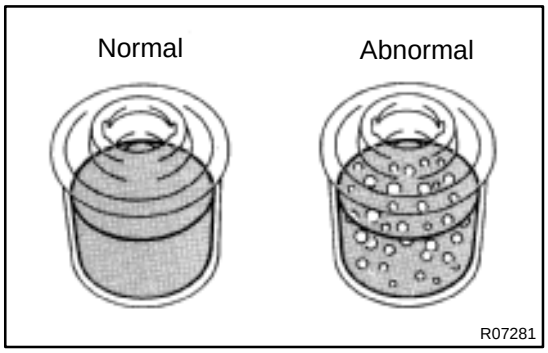

8. CHECK FOR FOAMING OR EMULSIFICATION

If the system has to be bled twice specifically because of foaming or emulsification, check for fluid leaks in the system.

9. CHECK FLUID LEVEL
(See page SR–5)

SR0L8–08

INSPECTION

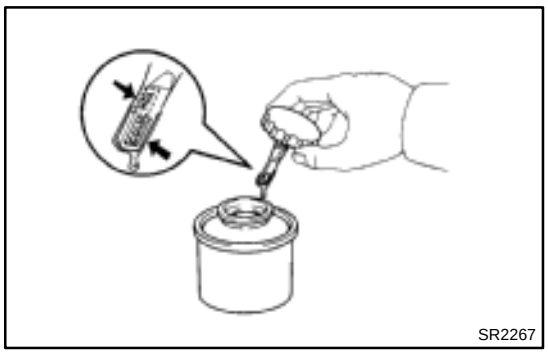
SR2267

1. CHECK FLUID LEVEL

(a) Keep the vehicle level.

(b) With the engine stopped, check the fluid level in the oil reservoir.

If necessary, add fluid.

Fluid: ATF DEXRON® II or III

HINT:

Check that the fluid level is within the HOT LEVEL range on the reservoir cap dipstick. If the fluid is cold, check that it is within the COLD LEVEL range.

(c) Start the engine and run it at idle.

(d) Turn the steering wheel from lock to lock several times to boost fluid temperature.

Fluid temperature: 80˚C (176˚F)

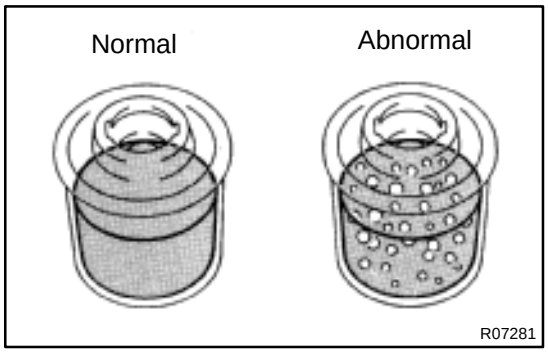

R07281

(e) Check for foaming or emulsification.

If there is foaming or emulsification, bleed power steering system (See page SR–4).

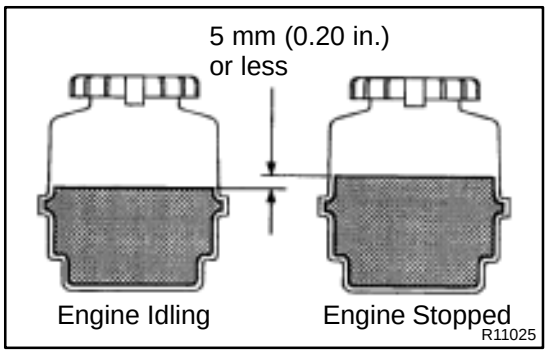

R11025

(f) With the engine idling, measure the fluid level in the oil reservoir.

(g) Stop the engine.

(h) Wait a few minutes and remeasure the fluid level in the oil reservoir.

Maximum fluid level rise: 5 mm (0.20 in.)

If a problem is found, bleed power steering system (See page SR–4).

(i) Check the fluid level.

2. CHECK STEERING FLUID PRESSURE

(a) Disconnect the pressure feed tube from the PS vane pump (See page SR–22).

(b) Connect SST, as shown in the illustration below.
SST 09640–10010 (09641–01010, 09641–01030, 09641–01060)

NOTICE:
Check that the valve of the SST is in the open position.

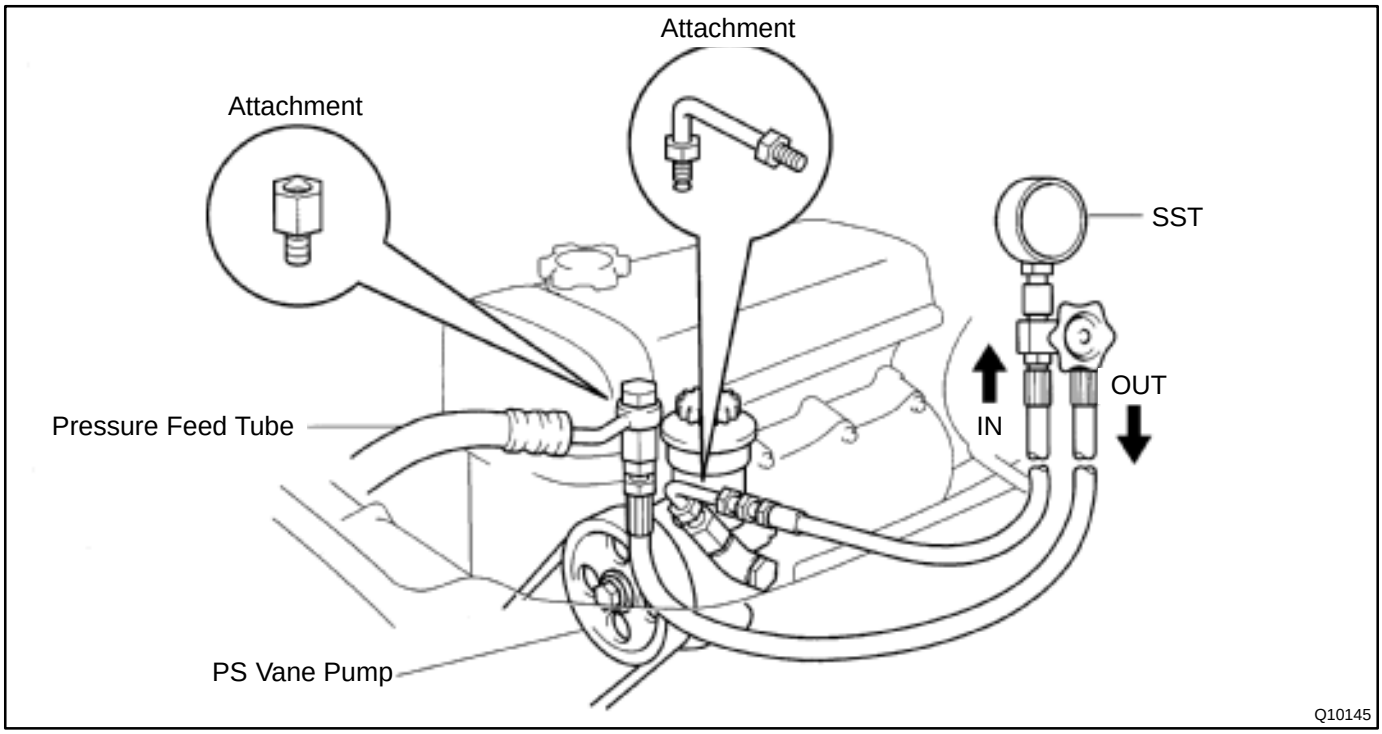

(c) Bleed the power steering system (See page SR–4).

(d) Start the engine and run it at idle.

(e) Turn the steering wheel from lock to lock several times to boost fluid temperature.
Fluid temperature: 80 ˚C (176 ˚F)

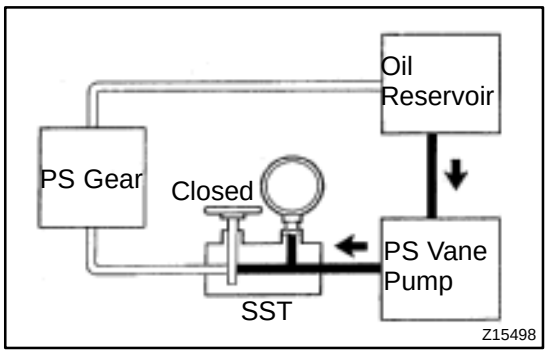

(f) With the engine idling, close the valve of the SST and observe the reading on the SST.
Minimum fluid pressure:
6,374 kPa (65 kgf/cm^2, 925 psi)

NOTICE:
- **Do not keep the valve closed for more than 10 seconds.**
- **Do not let the fluid temperature become too high.**

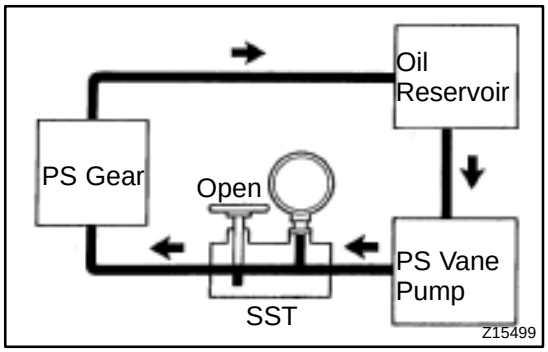

(g) With the engine idling, open the valve fully.
(h) Measure the fluid pressure at engine speeds of 1,000 rpm and 3,000 rpm.
Difference fluid pressure:
490 kPa (5 kgf/cm^2, 71 psi) or less

NOTICE:
Do not turn the steering wheel.

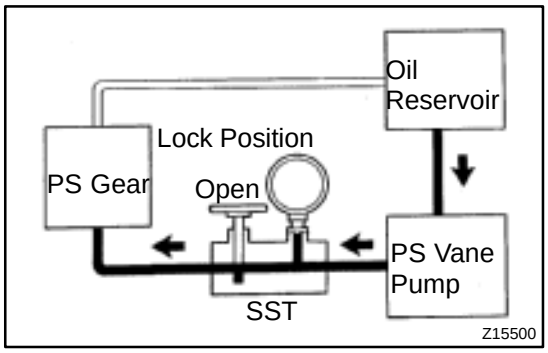

(i) With the engine idling and valve fully opened, turn the steering wheel to full lock position.
Minimum fluid pressure:
6,374 kPa (65 kgf/cm^2, 925 psi)

NOTICE:
- **Do not maintain lock position for more than 10 seconds.**
- **Do not let the fluid temperature become too high.**

(j) Disconnect the SST.
(k) Connect the pressure feed tube to the PS vane pump (See page SR–29).
(l) Bleed the power steering system (See page SR–4).

POWER STEERING GEAR

COMPONENTS

SR0LN–02

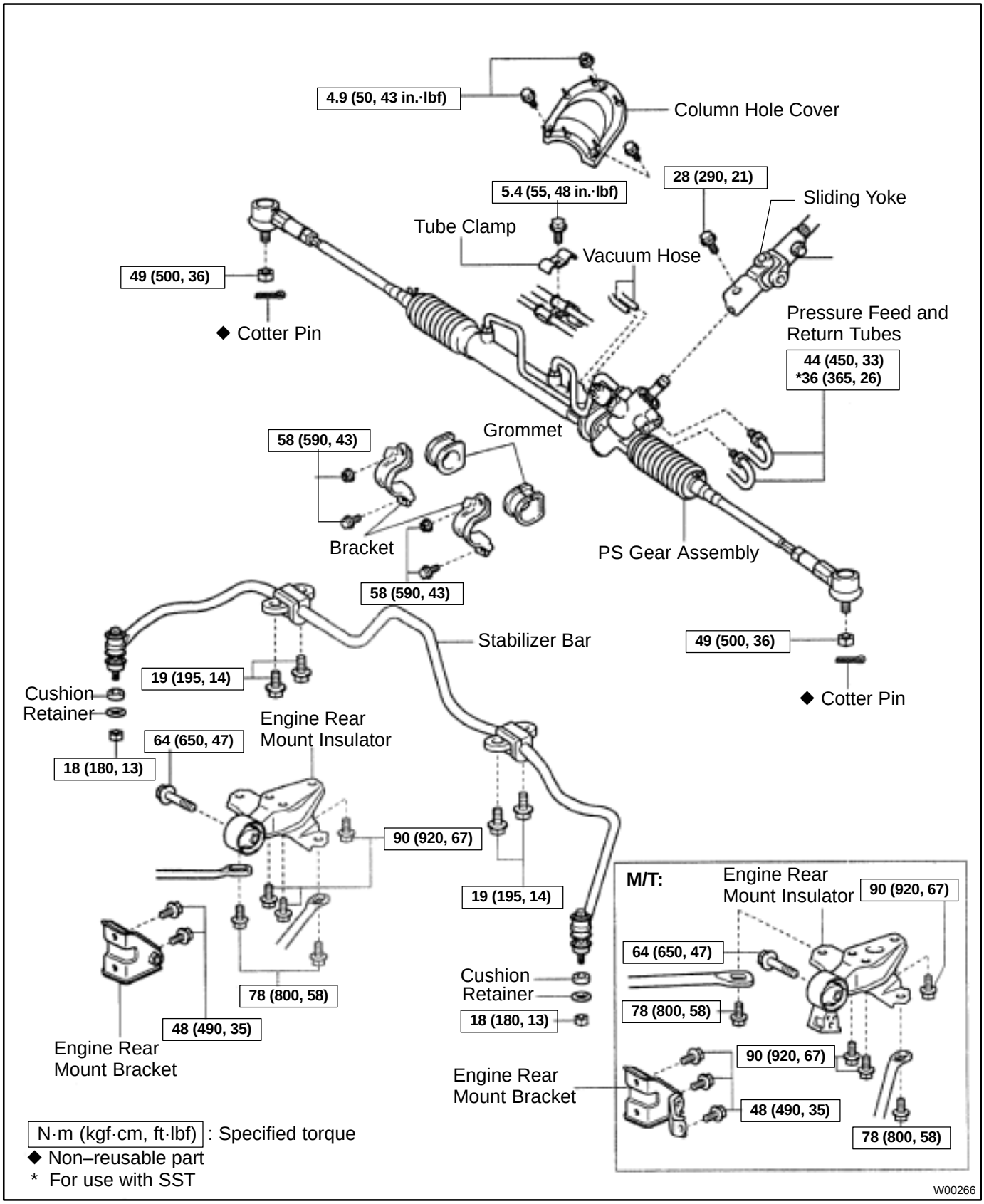

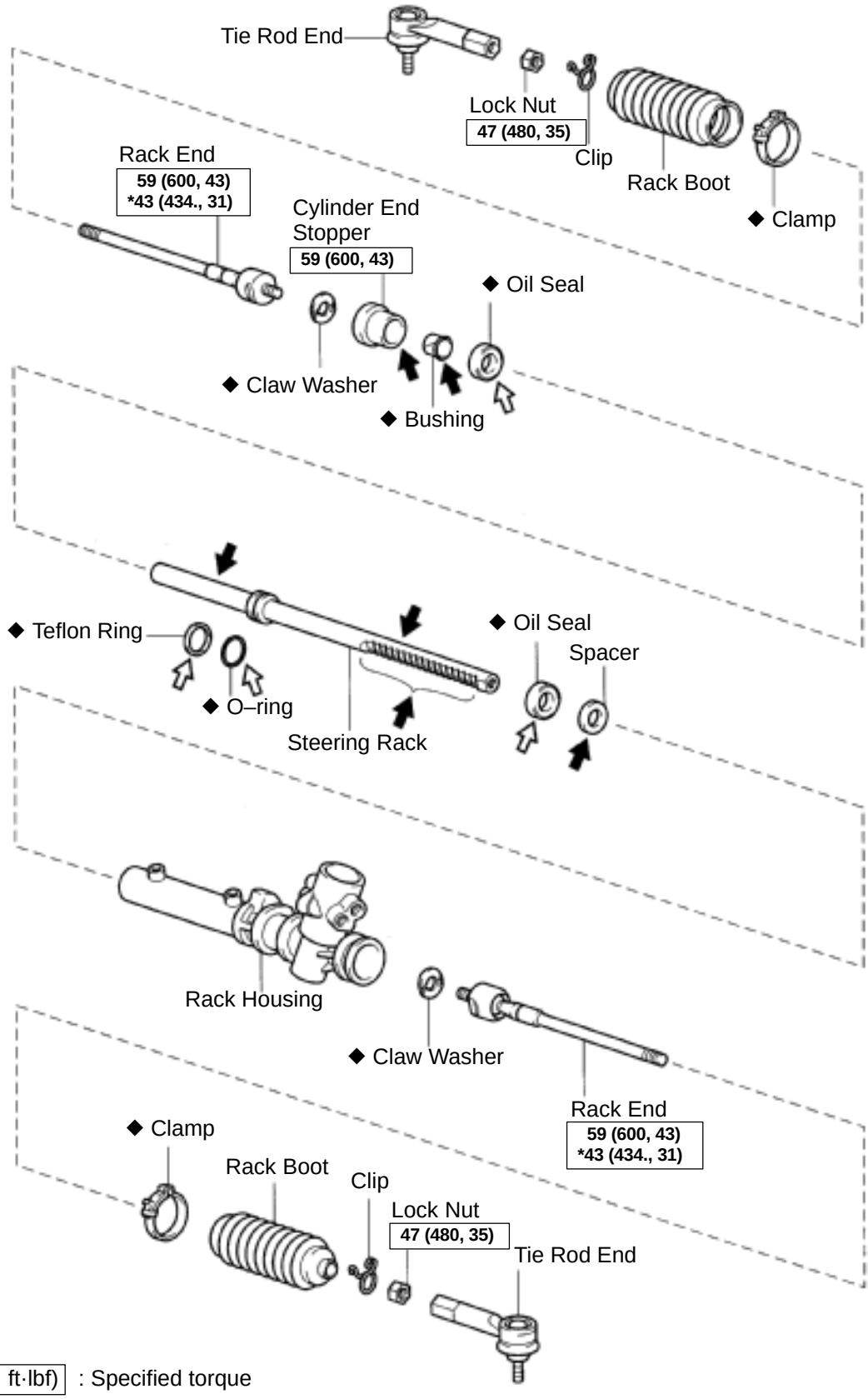

N·m (kgf·cm, ft·lbf) : Specified torque
◆ Non–reusable part
⬅ Molybdenum disulfide lithium base grease
⇦ Power steering fluid
* For use with SST

Z19012

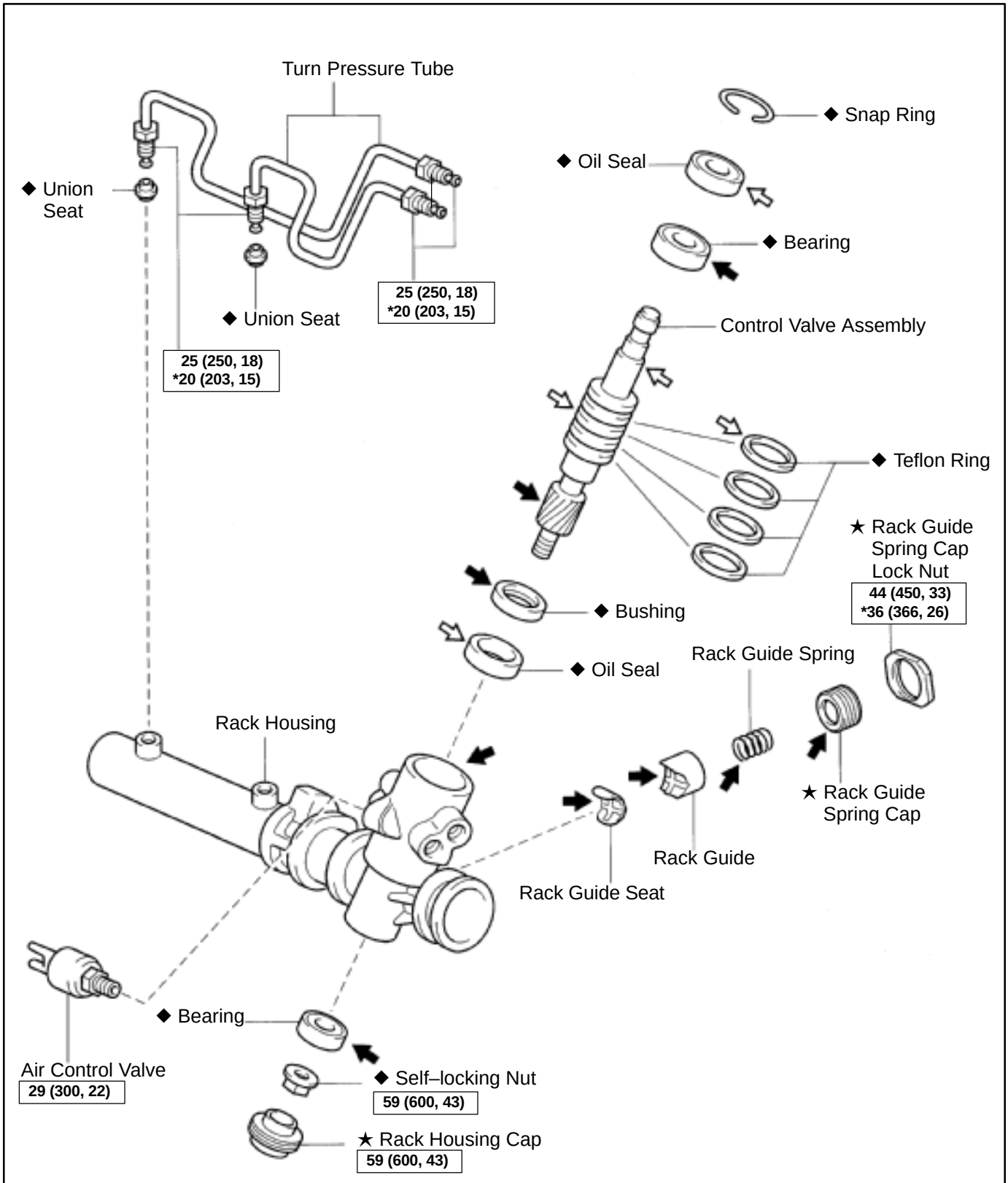

N·m (kgf·cm, ft·lbf) : Specified torque
◆ Non–reusable part
★ Precoated part
⬅ Molybdenum disulfide lithium base grease
⇦ Power steering fluid
* For use with SST

Z19013

SR0LP–02

DISASSEMBLY

NOTICE:

When using a vise, do not overtighten it.

1. SECURE PS GEAR ASSEMBLY IN VISE

Using SST, secure the gear assembly in a vise.

SST 09612–00012

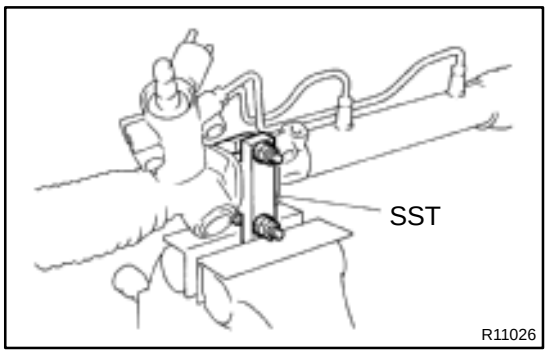

2. REMOVE 2 TURN PRESSURE TUBES

(a) Using SST, remove the tube.

SST 09633–00020

(b) Remove the 2 union seats from the rack housing.

3. REMOVE AIR CONTROL VALVE

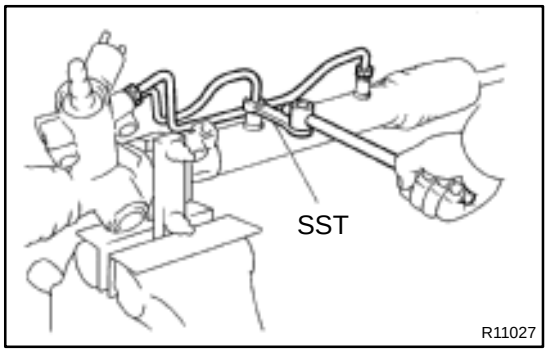

4. REMOVE RH AND LH TIE ROD ENDS AND LOCK NUTS

Place matchmarks on the tie rod end and rack end.

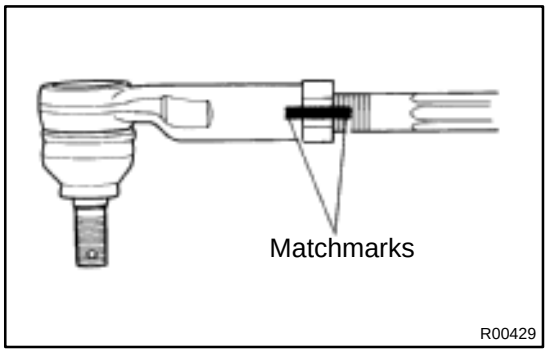

5. REMOVE RH AND LH CLIPS, RACK BOOTS AND CLAMPS

Using a screwdriver, loosen the clamp.

NOTICE:

- **Be careful not to damage the boot.**
- **Mark the RH and LH boots.**

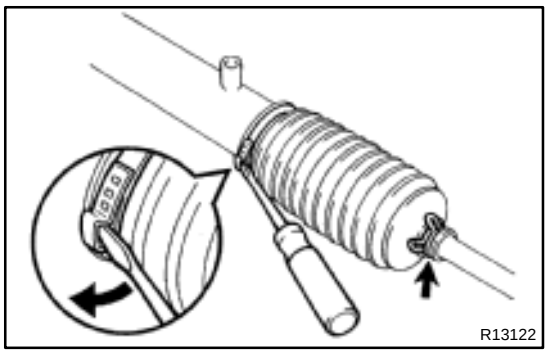

6. REMOVE RH AND LH RACK ENDS AND CLAW WASHERS

(a) Using a screwdriver and a hammer, unstake the washer.

NOTICE:

Avoid any impact to the steering rack.

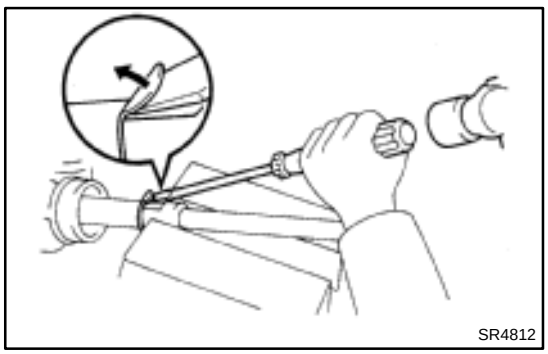

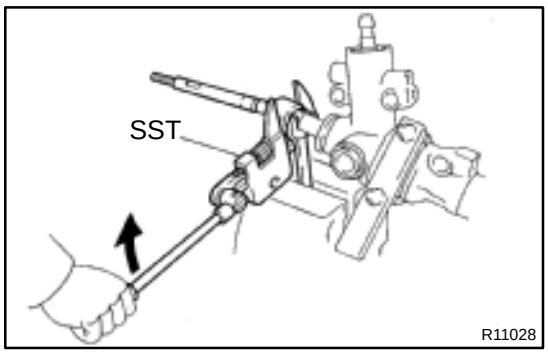

(b) Using a spanner, hold the steering rack steadily and using SST, remove the rack end.
SST 09922–10010

NOTICE:

- **Using SST 09922–10010 in the direction shown in the illustration.**
- **Mark the RH and LH rack end.**

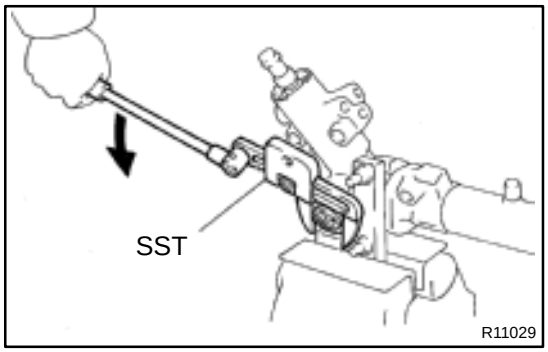

7. REMOVE RACK GUIDE SPRING CAP LOCK NUT

Using SST, remove the nut.
SST 09922–10010

NOTICE:

Use SST 09922–10010 in the direction shown in the illustration.

8. REMOVE RACK GUIDE SPRING CAP

Using a hexagon wrench (21 mm), remove the cap.

9. REMOVE RACK GUIDE SPRING, RACK GUIDE AND RACK GUIDE SEAT

Remove the seat from the guide.

10. REMOVE RACK HOUSING CAP

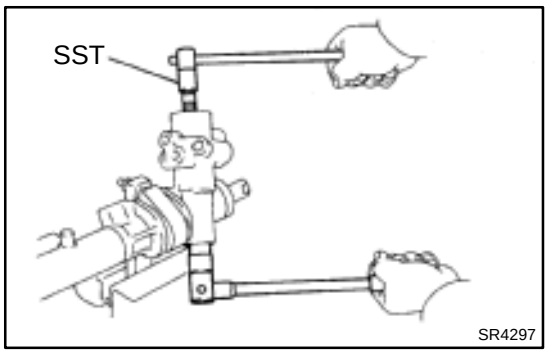

11. REMOVE SELF–LOCKING NUT

Using SST, stop the control valve rotating and remove the nut.
SST 09616–00010

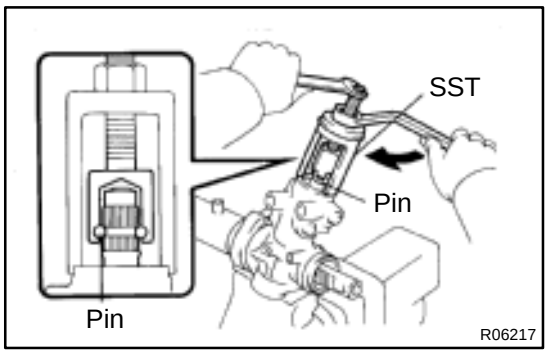

12. REMOVE CONTROL VALVE ASSEMBLY WITH OIL SEAL AND BEARING

(a) Using snap ring pliers, remove the snap ring from the rack housing.

(b) Using SST, remove the valve assembly with the oil seal and bearing.
SST 09613–12010

NOTICE:

Never attempt to tap out the control valve as this would damage it.

(c) Remove the oil seal from the valve assembly.

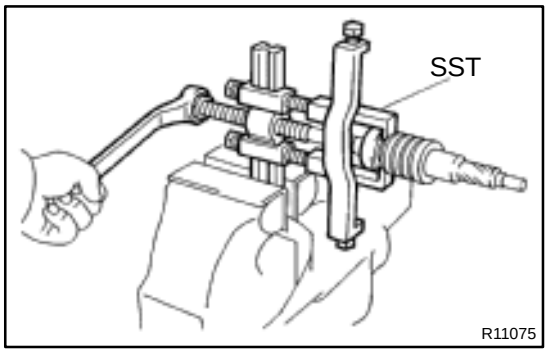

(d) Using SST, remove the bearing from the valve assembly.
SST 09950–40011 (09951–04010, 09952–04010, 09953–04020, 09954–04010, 09955–04050, 09957–04010, 09958–04010)

NOTICE:

Be careful not to damage the valve assembly.

13. REMOVE BEARING

Using a brass bar and hammer, tap out the bearing from the rack housing.

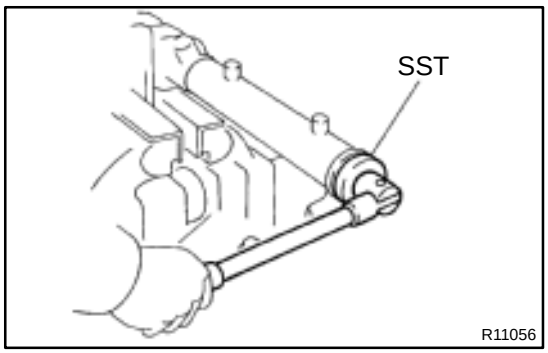

14. REMOVE CYLINDER END STOPPER AND BUSHING

(a) Using SST, remove the stopper.
SST 09631–20090

(b) Remove the bushing from the stopper.

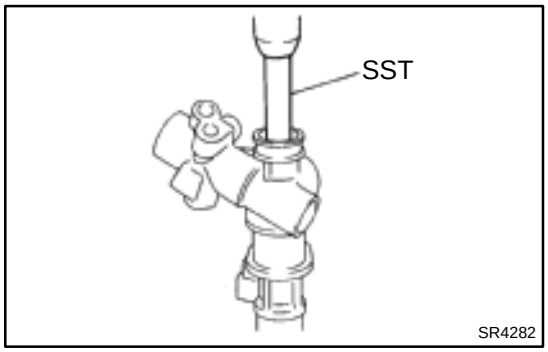

15. REMOVE STEERING RACK WITH OIL SEAL

(a) Using SST, press out the rack with the oil seal.
SST 09612–24014 (09612–10061)

NOTICE:

Take care not to drop the rack.

(b) Remove the oil seal from the rack.

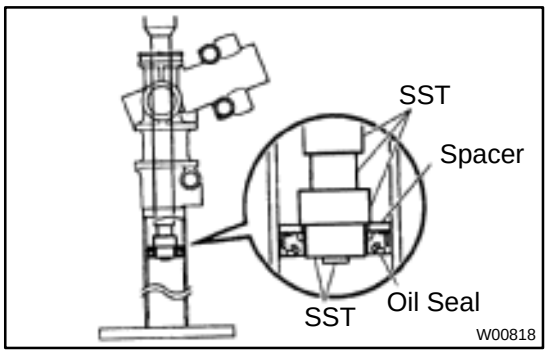

16. REMOVE SPACER AND OIL SEAL

Using SST, press out the spacer and oil seal.

SST 09950–60010 (09951–00200, 09951–00240, 09952–06010), 09950–70010 (09951–07360)

NOTICE:

Do not damage the rack housing.

SR0LQ–01

INSPECTION

NOTICE:

When using a vise, do not overtighten it.

1. INSPECT STEERING RACK

Using a dial indicator, check the rack for runout and teeth wear and damage.

Maximum runout: 0.30 mm (0.0118 in.)

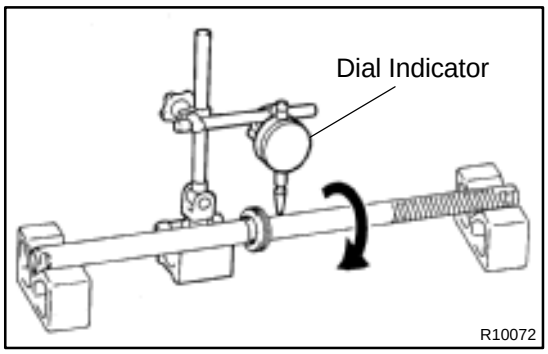

2. MEASURE OIL CLEARANCE BETWEEN CONTROL VALVE ASSEMBLY AND BUSHING

Using a micrometer and a cylinder gauge, measure the oil clearance.

Standard clearance:
0.050 – 0.083 mm (0.00197 – 0.00327 in.)
Maximum clearance: 0.125 mm (0.00492 in.)

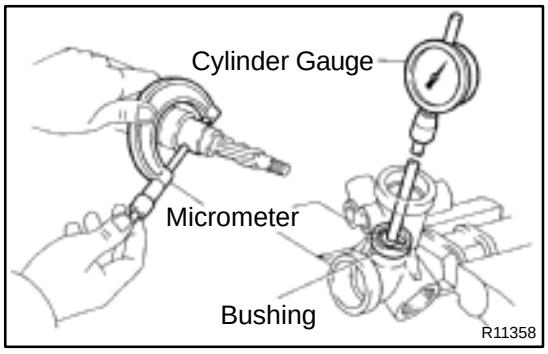

3. IF NECESSARY, REPLACE BUSHING AND OIL SEAL

(a) Using SST and 2 steel plates, remove the bushing from the rack housing.

SST 09612–65014 (09612–01030)

NOTICE:

- **As shown, from the opposite side of SST confirm that its claw is firmly caught on the bushing.**
- **Be careful not to damage the rack housing.**

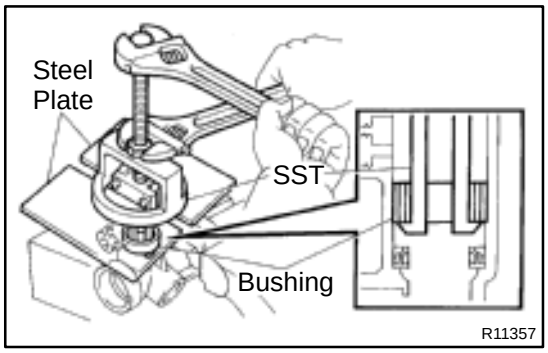

(b) Using a brass bar and a hammer, remove the oil seal from the rack housing.

NOTICE:

Be careful not to damage the rack housing.

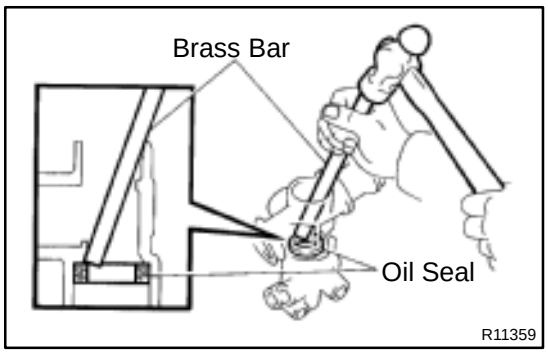

(c) Coat a new oil seal lip with power steering fluid.

(d) Using SST, press in the oil seal.

NOTICE:

Make sure to install the oil seal facing the correct direction.

SST 09950–60010 (09951–00230, 09951–00340, 09952–06010), 09950–70010, (09951–07150)

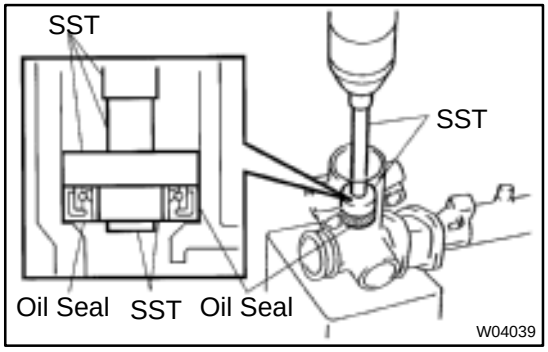

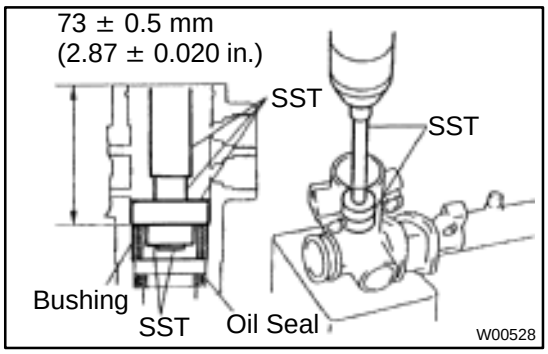

(e) Using SST and a press, carefully press in a new bushing to a depth of 73 ± 0.5 mm (2.87 ± 0.020 in.).
SST 09950–60010 (09951–00240, 09951–00340, 09952–06010), 09950–70010, (09951–07150)

NOTICE:
If the bushing is pushed in too far, it will cause deformation of the rack housing. If it is not pushed in far enough, it will interfere with the control valve assembly. Therefore, always use a press and install the bushing to the proper depth. Then, install the control valve assembly and ensure that it rotates smoothly.

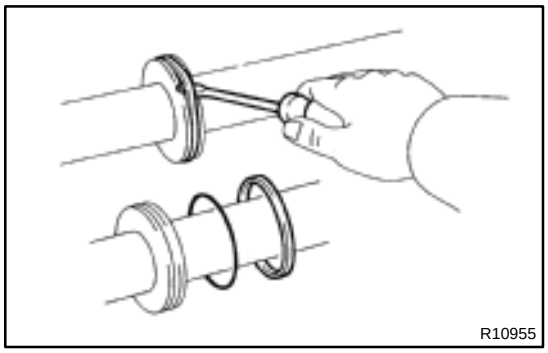

4. IF NECESSARY, REPLACE TEFLON RING AND O–RING

(a) Using a screwdriver, remove the teflon ring and O–ring from the steering rack.

NOTICE:
Be careful not to damage the groove for the teflon ring.

(b) Coat a new O–ring with power steering fluid and install it.

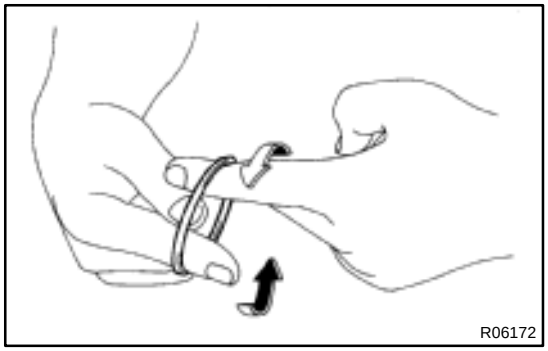

(c) Expand a new teflon ring with your fingers.

NOTICE:
Be careful not to overexpand the ring.

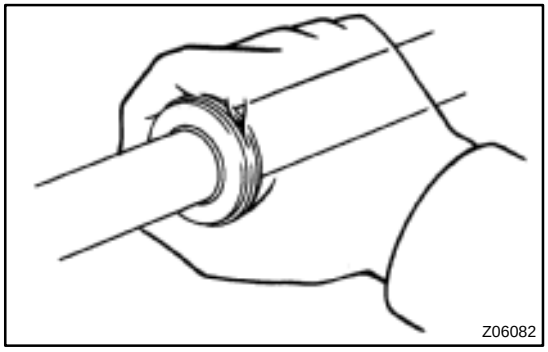

(d) Coat the ring with power steering fluid and install it to the steering rack, and settle it down with your fingers.

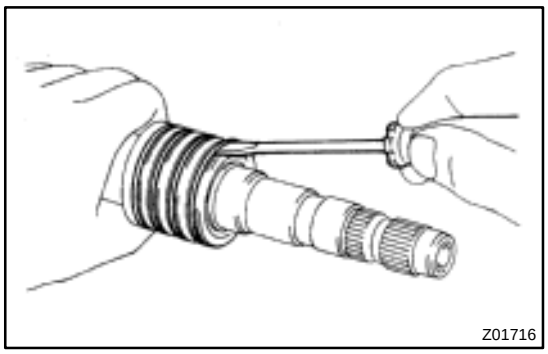

5. IF NECESSARY, REPLACE TEFLON RINGS

(a) Using a screwdriver, remove the 4 rings from the control valve assembly.

NOTICE:

Be careful not to damage the grooves for the ring.

(b) Expand 4 new teflon rings with your fingers.

NOTICE:

Be careful not to overexpand the ring.

(c) Coat the rings with power steering fluid and install them to the control valve, and settle them down with your fingers.

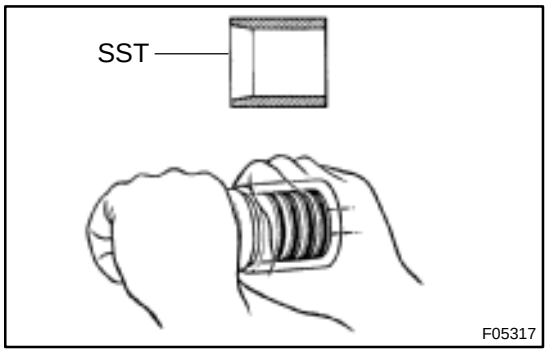

(d) Carefully slide the tapered end of SST over the rings until the rings fit to the control valve assembly.
SST 09631–20081

NOTICE:

Be careful not to damage the rings.

SR0LS–02

INSTALLATION

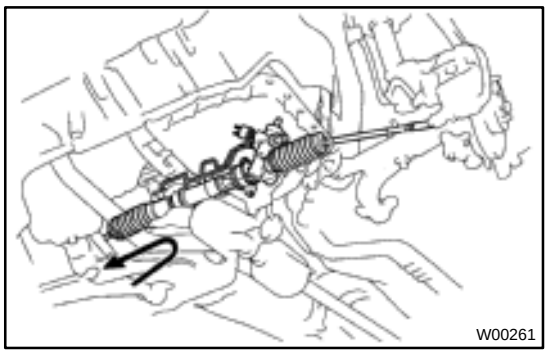

1. INSTALL PS GEAR ASSEMBLY

(a) Slide the gear assembly to the LH of the vehicle.

(b) Slide the gear assembly to the RH side and position it.

NOTICE:

Do not damage the turn pressure tubes.

2. INSTALL 2 GROMMETS AND BRACKETS

Torque the bolt and nut.

Torque: 58 N·m (590 kgf·cm, 43 ft·lbf)

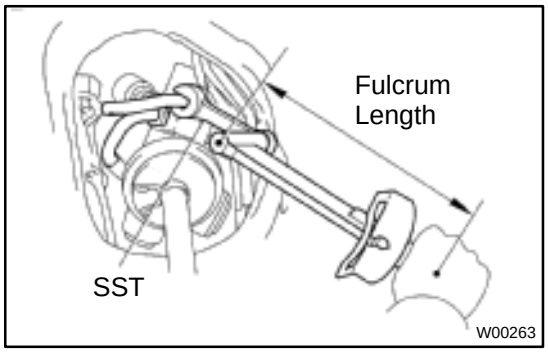

3. CONNECT PRESSURE FEED AND RETURN TUBES

Using SST, connect the tube.

SST 09631–22020

Torque: 36 N·m (365 kgf·cm, 26 ft·lbf)

HINT:

- Use a torque wrench with a fulcrum length of 300 mm (11.81 in.).
- This torque value is effective in case that SST is parallel to a torque wrench.

4. CONNECT 2 VACUUM HOSES

5. CONNECT TUBE CLAMP

Torque the bolt.

Torque: 5.4 N·m (55 kgf·cm, 48 in.·lbf)

6. INSTALL ENGINE REAR MOUNT BRACKET

(a) M/T:

Torque the 3 bolts.

Torque: 48 N·m (490 kgf·cm, 35 ft·lbf)

(b) A/T:

Torque the 2 bolts.

Torque: 48 N·m (490 kgf·cm, 35 ft·lbf)

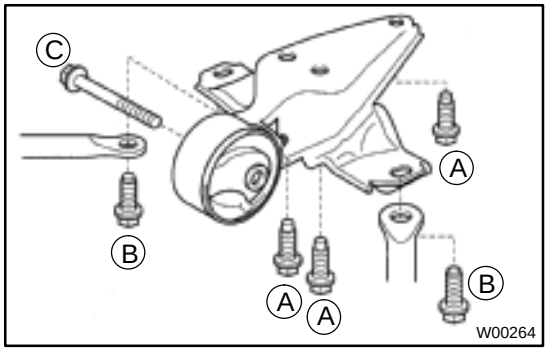

7. INSTALL ENGINE REAR MOUNT INSULATOR

Torque the 6 bolts.

Torque:

Bolt A: 90 N·m (920 kgf·cm, 67 ft·lbf)

Bolt B: 78 N·m (800 kgf·cm, 58 ft·lbf)

Bolt C: 64 N·m (650 kgf·cm, 47 ft·lbf)

8. INSTALL STABILIZER BAR

(See page SA–40)

9. CONNECT SLIDING YOKE

(See page SR–18)

10. INSTALL COLUMN HOLE COVER

Torque the 2 bolts and nut.

Torque: 4.9 N·m (50 kgf·cm, 43 in.·lbf)

11. CONNECT RH AND LH TIE ROD ENDS

(See page SA–15)

12. w/ Airbag:

PLACE FRONT WHEELS FACING STRAIGHT AHEAD

HINT:

Do it with the front of the vehicle jacked up.

13. w/ Airbag:
CENTER SPIRAL CABLE
(See page SR–18)

14. w/ Airbag:
INSTALL STEERING WHEEL

(a) Align the matchmarks on the wheel and main shaft assembly.

(b) Temporarily tighten the wheel set nut.

(c) Connect the connector.

15. BLEED POWER STEERING SYSTEM
(See page SR–4)

16. CHECK STEERING WHEEL CENTER POINT

17. w/ Airbag:
TORQUE STEERING WHEEL SET NUT
Torque: 34 N·m (350 kgf·cm, 25 ft·lbf)

18. w/ Airbag:
INSTALL STEERING WHEEL PAD
(See page SR–18)

19. CHECK FRONT WHEEL ALIGNMENT
(See page SA–4)

SR0LR–02

REASSEMBLY

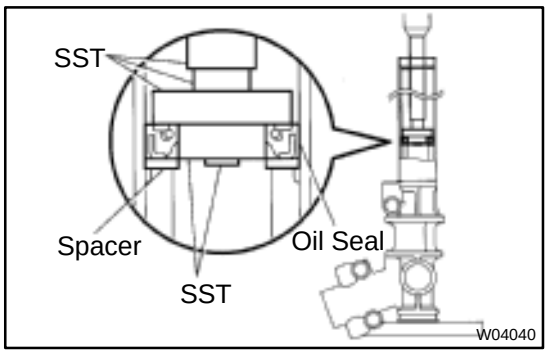

NOTICE:

When using a vise, do not overtighten it.

1. COAT WITH POWER STEERING FLUID OR MOLYBDENUM DISULFIDE LITHIUM BASE GREASE (See page SR–30)

2. INSTALL OIL SEAL AND SPACER

(a) Coat a new oil seal lip with power steering fluid.

(b) Install the oil seal and spacer to SST, and press in them.

SST 09950–60010 (09951–00200, 09951–00380, 09952–06010), 09950–70010 (09951–07360)

NOTICE:

- **Make sure to install the oil seal facing the correct direction.**
- **Take care that the oil seal does not get reversed as you install it.**

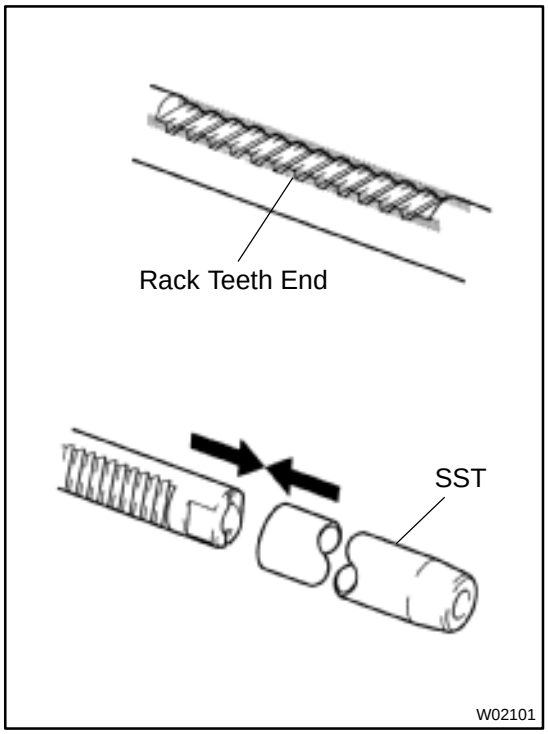

3. INSTALL STEERING RACK

(a) Install SST to the rack.

SST 09631–10041

HINT:

If necessary, scrape the burrs off the rack teeth end and burnish.

(b) Coat SST with power steering fluid.

(c) Insert the rack into the rack housing.

NOTICE:

Be careful not to damage the oil seal.

(d) Remove the SST.

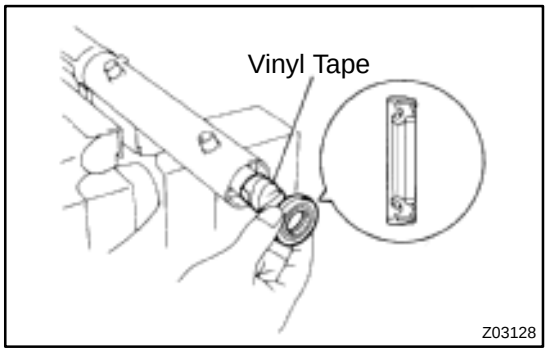

4. INSTALL OIL SEAL

(a) Coat a new oil seal lip with power steering fluid.

(b) To prevent oil seal lip damage, wind vinyl tape on the steering rack end, and apply power steering fluid.

(c) Install the oil seal by pushing it into the rack housing, without tilting.

NOTICE:

Make sure to install the oil seal facing the correct direction.

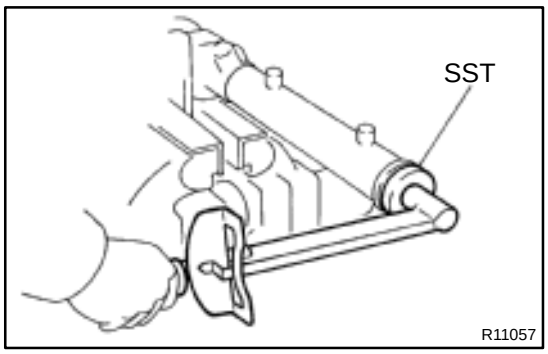

5. INSTALL BUSHING AND CYLINDER END STOPPER

(a) Install a new bushing to the stopper.

(b) Using SST, torque the stopper.

SST 09631–20090

Torque: 59 N·m (600 kgf·cm, 43 ft·lbf)

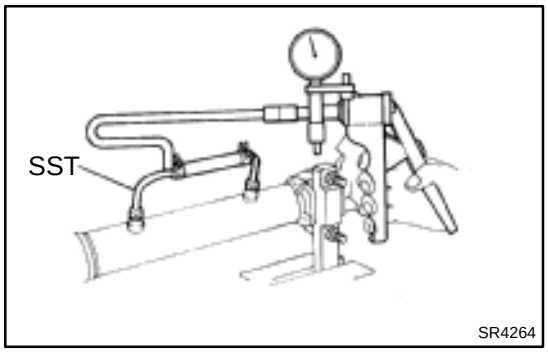

6. AIR TIGHTNESS TEST

(a) Install SST to the rack housing.

SST 09631–12071

NOTICE:

Do not install union seats.

(b) Apply 53 kPa (400 mmHg, 15.75 in.Hg) of vacuum for about 30 seconds.

(c) Check that there is no change in the vacuum.

If there is change in the vacuum, check the installation of the oil seals.

7. INSTALL CONTROL VALVE ASSEMBLY

(a) Coat the teflon rings with power steering fluid.

(b) Push the valve assembly into the rack housing.

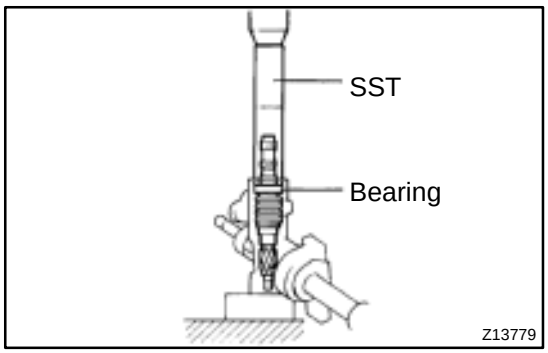

8. INSTALL BEARING

Using SST, press in a new bearing.

SST 09612–22011

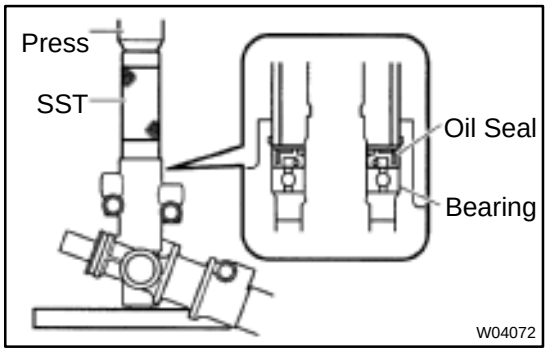

9. INSTALL OIL SEAL

(a) Coat a new oil seal lip with power steering fluid.

(b) Using SST, press in the oil seal until it contacts the bearing.

SST 09612–22011

NOTICE:

Make sure to install the oil seal facing the correct direction.

(c) Using snap ring pliers, install a new snap ring to the rack housing.

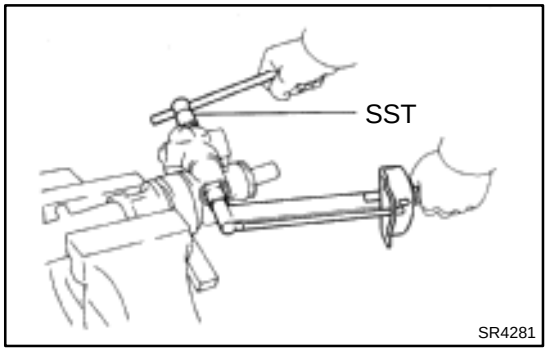

10. INSTALL SELF–LOCKING NUT

(a) Coat a new bearing with molybdenum disulfide lithium base grease and install it to the control valve shaft.

(b) Using SST, stop the control valve shaft rotating and torque a new nut.
SST 09616–00010
Torque: 59 N·m (600 kgf·cm, 43 ft·lbf)

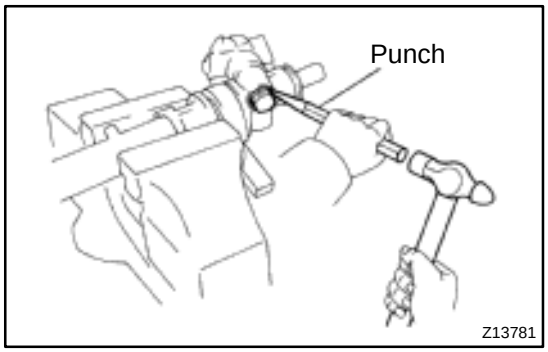

11. INSTALL RACK HOUSING CAP

(a) Apply sealant to 2 or 3 threads of the cap.
Sealant:
Part No.08833–00080, THREE BOND 1344, LOCTITE 242 or equivalent

(b) Torque the cap.
Torque: 59 N·m (600 kgf·cm, 43 ft·lbf)

(c) Using a punch and a hammer, stake the cap at 2 places.

12. INSTALL RACK GUIDE SEAT, RACK GUIDE, RACK GUIDE SPRING, AND RACK GUIDE SPRING CAP

(a) Install the seat to the guide.

(b) Install the guide to the rack housing.

(c) Apply sealant to 2 or 3 threads of the spring cap.
Sealant:
Part No.08833–00080, THREE BOND 1344, LOCTITE 242 or equivalent

(d) Temporarily install the cap.

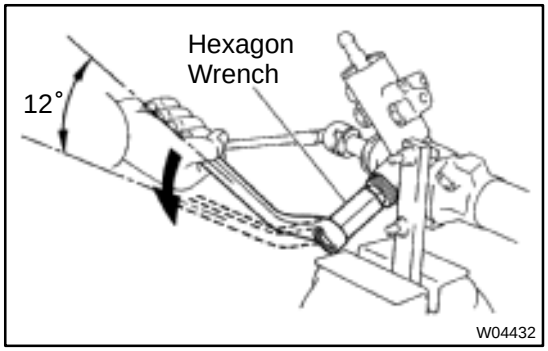

13. ADJUST TOTAL PRELOAD

(a) To prevent the steering rack teeth from damaging the oil seal lip, temporarily install the RH and LH rack ends.

(b) Using a hexagon wrench (21 mm), torque the rack guide spring cap.
Torque: 25 N·m (250 kgf·cm, 18 ft·lbf)

(c) Using a hexagon wrench (21 mm), return the cap 12°.

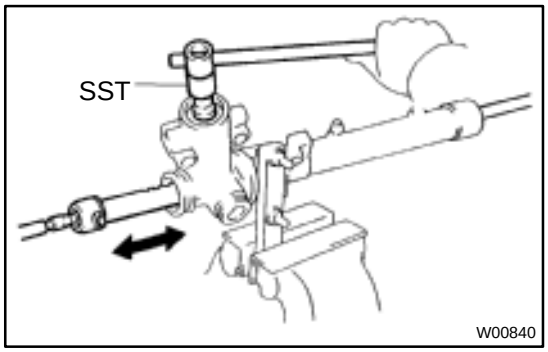

(d) Using SST, turn the control valve shaft right and left 1 or 2 times.
SST 09616–00010

(e) Using a hexagon wrench (21 mm), loosen the cap until the rack guide spring is not functioning.

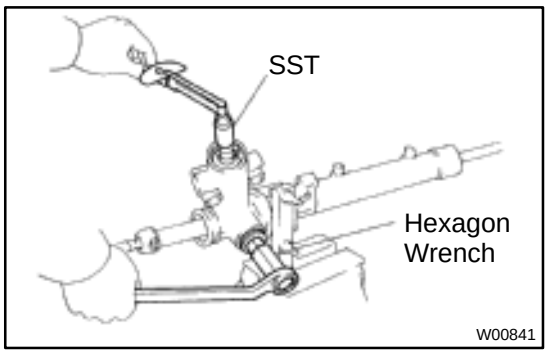

(f) Using SST, a torque wrench and hexagon wrench (21 mm), tighten the cap until the preload is within the specification.
SST 09616–00010
Preload (turning):
0.8 – 1.4 N·m (8 – 14 kgf·cm, 6.9 – 12.2 in.·lbf)

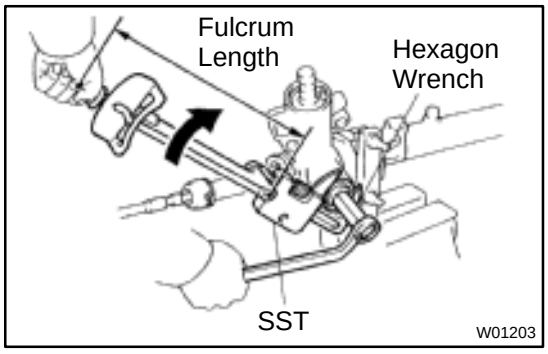

14. INSTALL RACK GUIDE SPRING CAP LOCK NUT

(a) Apply sealant to 2 or 3 threads of the nut.
Sealant:
Part No.08833–00080, THREE BOND 1344,
LOCTITE 242 or equivalent

(b) Using a hexagon wrench (21 mm), hold the rack guide spring cap and using SST, torque the nut.
SST 09922–10010
Torque: 36 N·m (366 kgf·cm, 26 ft·lbf)

NOTICE:
Use SST 09922–10010 in the direction shown in the illustration.

HINT:
Use a torque wrench with a fulcrum length of 300 mm (11.81 in.).

(c) Recheck the total preload.
Preload (turning):
0.8 – 1.4 N·m (8 – 14 kgf·cm, 6.9 – 12.2 in.·lbf)

(d) Remove the RH and LH rack end.

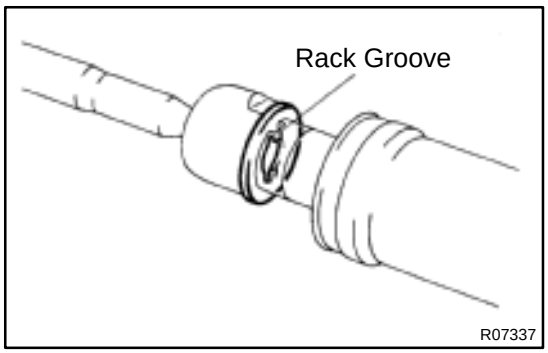

15. INSTALL RH AND LH CLAW WASHERS AND RACK ENDS

(a) Install a new washer, and temporarily tighten the rack end.

HINT:
Align the claws of the washer with the steering rack grooves.

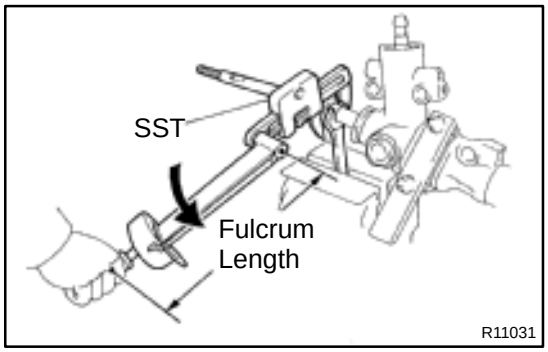

(b) Using a spanner, hold the steering rack steadily and using SST, torque the rack end.
SST 09922–10010
Torque: 51 N·m (520 kgf·cm, 18 ft·lbf)

NOTICE:
Use SST 09922–10010 in the direction shown in the illustration.

HINT:
Use a torque wrench with a fulcrum length of 345 mm (13.58 in.).

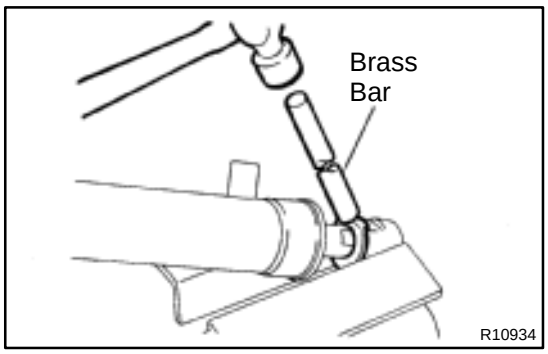

(c) Using a brass bar and a hammer, stake the washer.

NOTICE:

Avoid any impact to the rack.

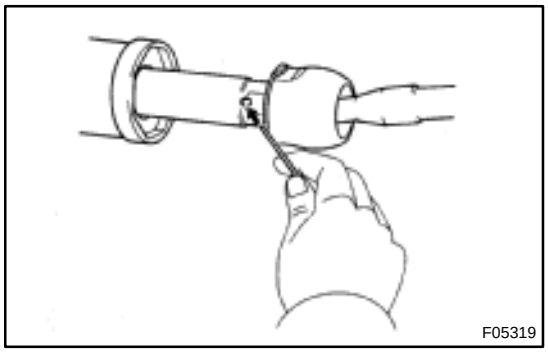

16. INSTALL RH AND LH RACK BOOTS, CLAMPS AND CLIPS

(a) Ensure that the steering rack hole is not clogged with grease.

HINT:

If the hole is clogged, the pressure inside the boot will change after it is assembled and the steering wheel is turned.

(b) Install the boot.

NOTICE:

Be careful not to damage or twist the boots.

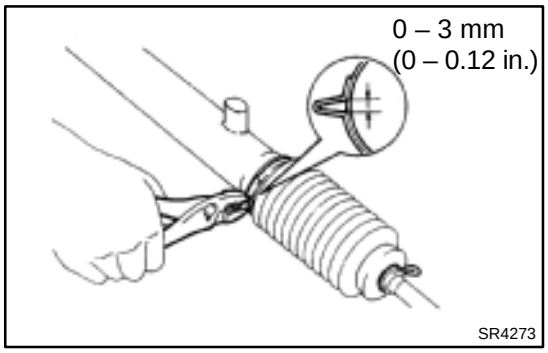

(c) Tighten a new clamp, as shown in the illustration.

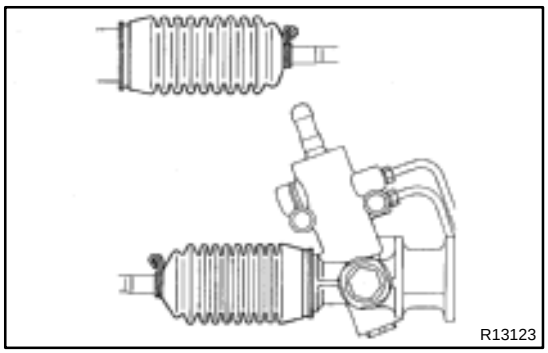

(d) Install the clip.

HINT:

Face the open ends of the clip outward/upward, as shown in the illustration.

17. INSTALL RH AND LH TIE ROD ENDS AND LOCK NUTS

(a) Screw the lock nut and tie rod end onto the rack end until the matchmarks are aligned.

(b) After adjusting toe–in, torque the nut (See page SA–4).

Torque: 47 N·m (480 kgf·cm, 35 ft·lbf)

18. INSTALL AIR CONTROL VALVE

Torque the valve.

Torque: 29 N·m (300 kgf·cm, 22 ft·lbf)

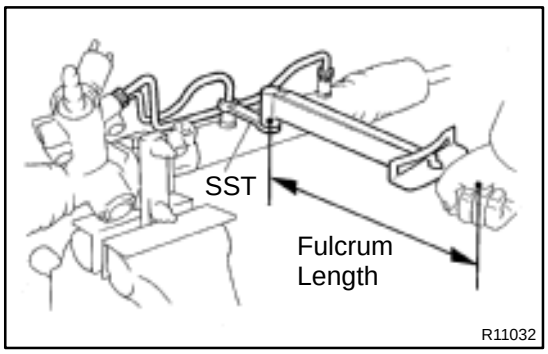

19. INSTALL 2 TURN PRESSURE TUBES

(a) Install 2 new union seats.

(b) Using SST, install the tube.

SST 09633–00020

Torque: 20 N·m (203 kgf·cm, 15 ft·lbf)

HINT:

- Use a torque wrench with a fulcrum length of 300 mm (11.81 in.).
- This torque value is effective in case that SST is parallel to a torque wrench.

SR0LO–02

REMOVAL

1. PLACE FRONT WHEELS FACING STRAIGHT AHEAD

2. w/ Airbag:
REMOVE STEERING WHEEL PAD
(See page SR–12)

3. w/ Airbag:
REMOVE STEERING WHEEL
(See page SR–12)

4. DISCONNECT RH AND LH TIE ROD ENDS
(See page SA–10)

5. REMOVE COLUMN HOLE COVER

Remove the 2 bolts and nut.

6. DISCONNECT SLIDING YOKE
(See page SR–12)

7. REMOVE STABILIZER BAR
(See page SA–39)

8. REMOVE ENGINE REAR MOUNT INSULATOR

Remove the 6 bolts.

9. REMOVE ENGINE REAR MOUNT BRACKET

(a) M/T:
Remove the 3 bolts.

(b) A/T:
Remove the 2 bolts.

10. DISCONNECT TUBE CLAMP

Remove the bolt.

11. DISCONNECT 2 VACUUM HOSES

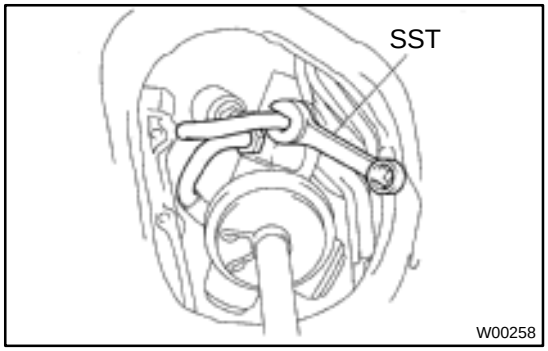

12. DISCONNECT PRESSURE FEED AND RETURN TUBES

Using SST, disconnect the tube.
SST 09631–22020

13. REMOVE 2 BRACKETS AND GROMMETS

Remove the bolt and nut.

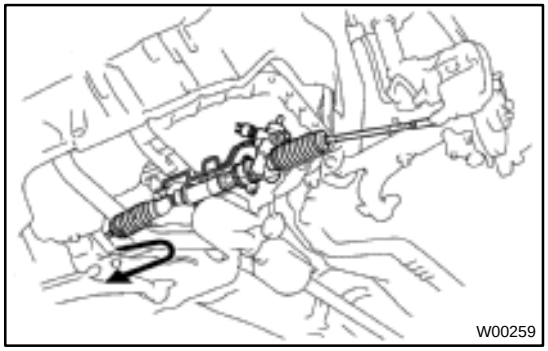

14. REMOVE PS GEAR ASSEMBLY

(a) Slide the gear assembly to the LH side of the vehicle.

(b) Slide the gear assembly to the RH side and pull it out.

NOTICE:

Do not damage the turn pressure tubes.

POWER STEERING VANE PUMP

COMPONENTS

SR0LH–01

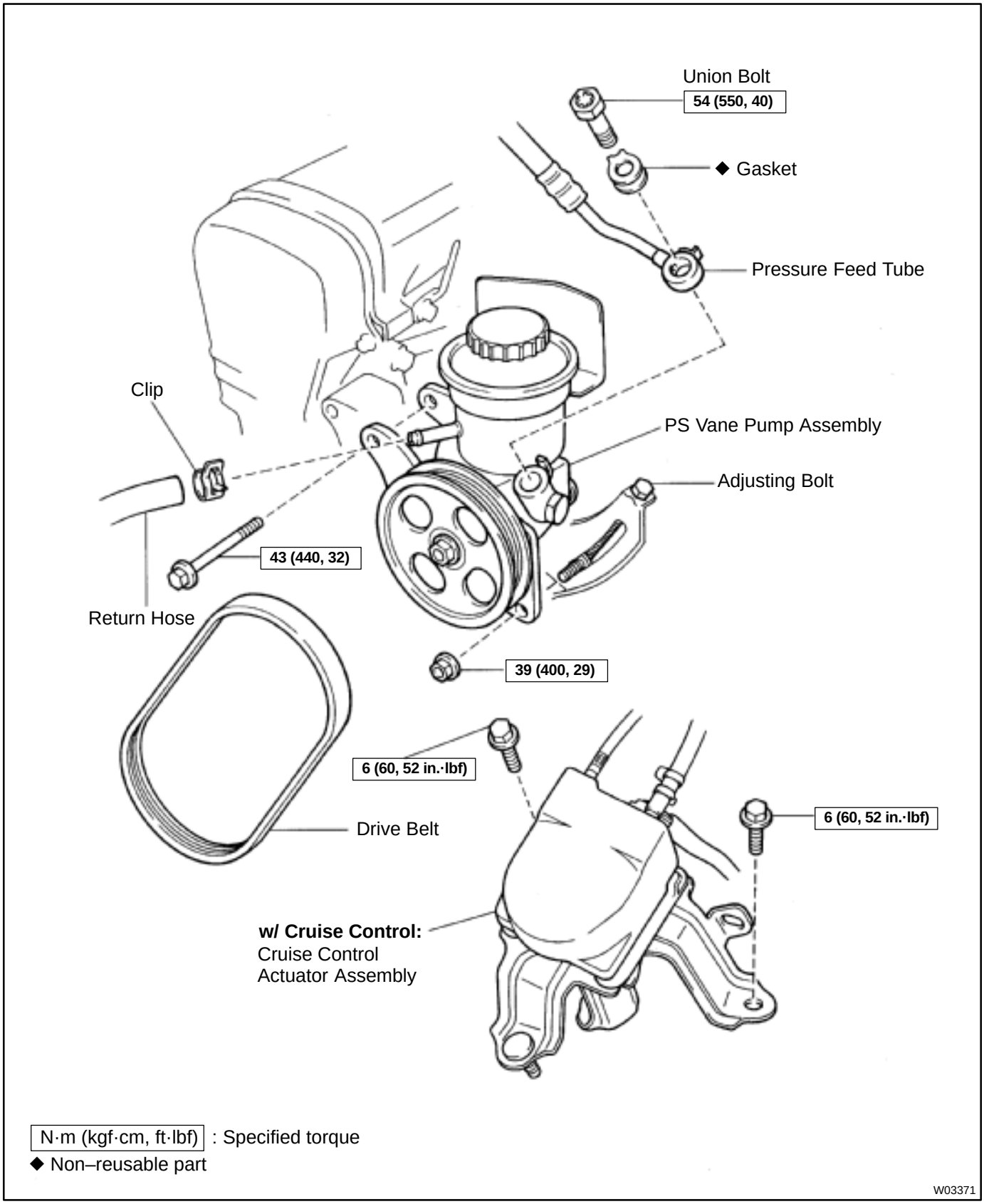

N·m (kgf·cm, ft·lbf) : Specified torque
◆ Non–reusable part

W03371

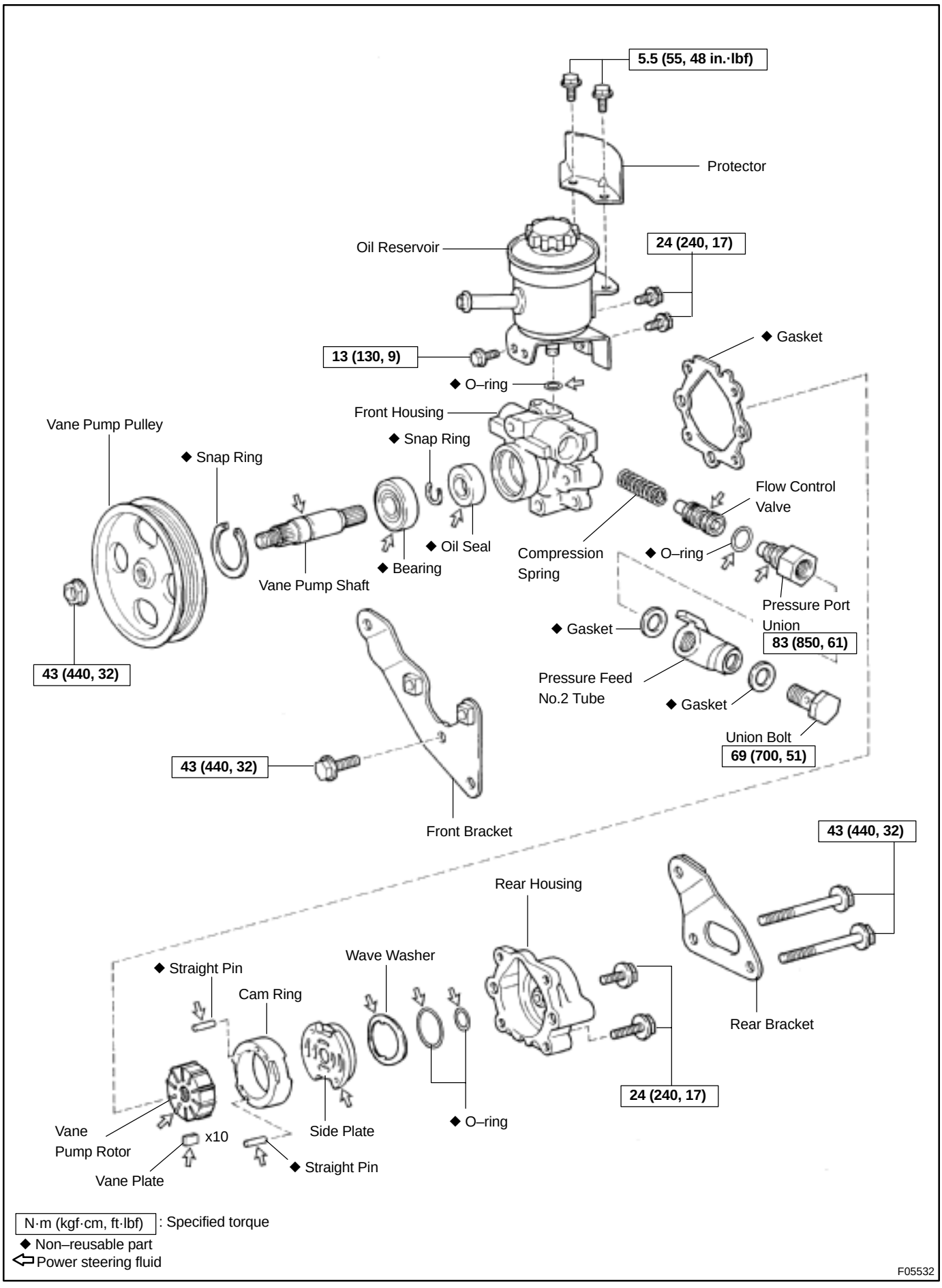

N·m (kgf·cm, ft·lbf) : Specified torque
◆ Non–reusable part
⇦ Power steering fluid

F05532

SR0LJ–01

DISASSEMBLY

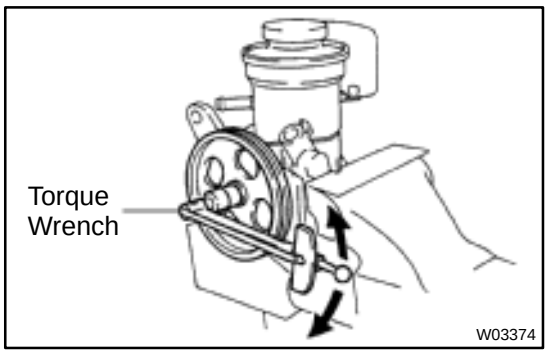

NOTICE:

When using a vise, do not overtighten it.

1. MEASURE PS VANE PUMP ROTATING TORQUE

(a) Check that the pump rotates smoothly without abnormal noise.

(b) Using a torque wrench, check the pump rotating torque.
Rotating torque:
0.2 N·m (2.5 kgf·cm, 2.2 in.·lbf) or less

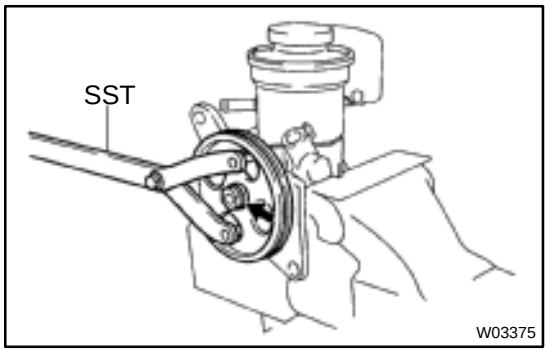

2. REMOVE VANE PUMP PULLEY

Using SST, stop the pulley rotating and remove the nut.
SST 09960–10010 (09962–01000, 09963–01000)

3. REMOVE FRONT AND REAR BRACKETS

Remove the 3 bolts and brackets.

4. REMOVE PROTECTOR

Remove the 2 bolts and protector.

5. REMOVE OIL RESERVOIR

(a) Remove the 3 bolts.

(b) Remove the O–ring from the reservoir.

6. REMOVE PRESSURE FEED NO.2 TUBE

Remove the union bolt and 2 gaskets.

7. REMOVE PRESSURE PORT UNION, FLOW CONTROL VALVE AND COMPRESSION SPRING

Remove the O–ring from the union.

8. REMOVE REAR HOUSING

(a) Remove the 2 bolts.

(b) Remove the 2 O–rings from the housing.

9. REMOVE WAVE WASHER

10. REMOVE SIDE PLATE

11. REMOVE GASKET

12. REMOVE CAM RING, 10 VANE PLATES AND VANE PUMP ROTOR

NOTICE:

Take care not to drop the plate.

13. REMOVE STRAIGHT PINS

Remove the 2 pins from the front housing.

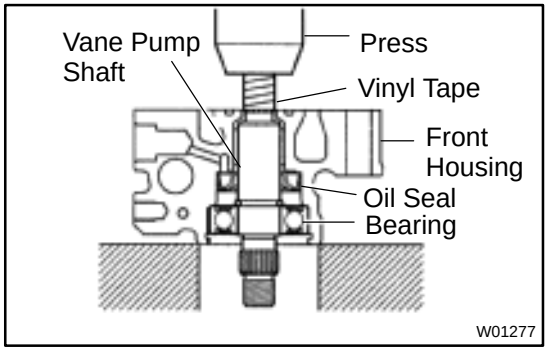

14. REMOVE VANE PUMP SHAFT WITH BEARING

(a) Using snap ring pliers, remove the snap ring from the front housing.

(b) Wind vinyl tape on the serrated part of the shaft.

(c) Press out the the shaft with the bearing.

SR0LK–01

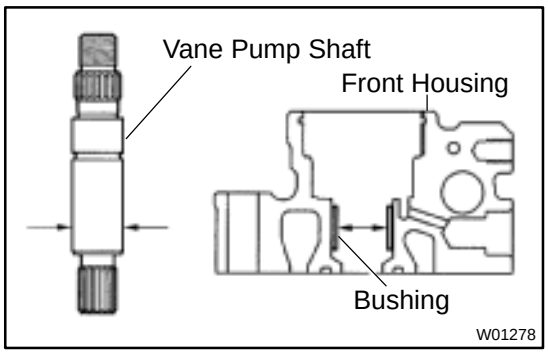

INSPECTION

NOTICE:

When using a vise, do not overtighten it.

1. MEASURE OIL CLEARANCE BETWEEN VANE PUMP SHAFT AND BUSHING

Using a micrometer and a caliper gauge, measure the oil clearance.

Standard clearance:
0.03 – 0.05 mm (0.0012 – 0.0020 in.)
Maximum clearance: 0.07 mm (0.0028 in.)

If it is more than the maximum, replace the front housing and vane pump shaft.

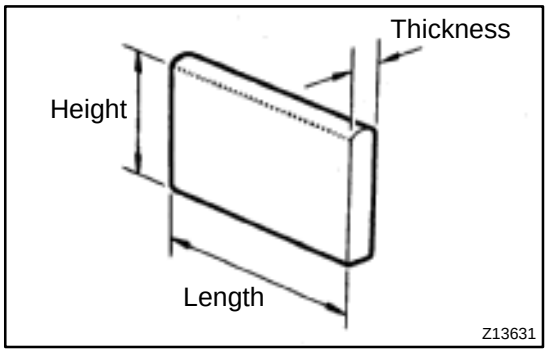

2. INSPECT VANE PUMP ROTOR AND VANE PLATES

(a) Using a micrometer, measure the height, thickness and length of the 10 plates.

Minimum height: 8.6 mm (0.339 in.)
Minimum thickness: 1.397 mm (0.05500 in.)
Minimum length: 14.991 mm (0.59020 in.)

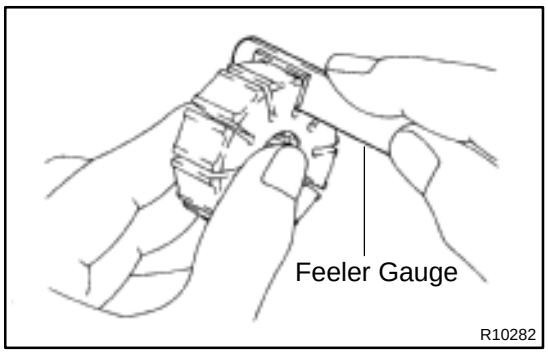

(b) Using a feeler gauge, measure the clearance between the rotor groove and plate.

Maximum clearance: 0.035 mm (0.00138 in.)

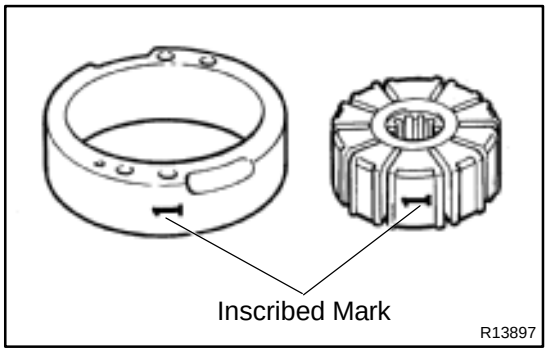

If it is more than the maximum, replace the plate and/or rotor with the one having the same mark stamped on the cam ring.

Inscribed mark: 1, 2, 3, 4 or None

HINT:
There are 5 vane plate lengths with the following rotor and cam ring marks:

Rotor and cam ring mark	Vane plate part number	Vane plate length mm (in.)
None	44345–26010	14.999 – 15.001 (0.59051 – 0.59059)
1	44345–26020	14.997 – 14.999 (0.59043 – 0.59051)
2	44345–26030	14.995 – 14.997 (0.59035 – 0.59043)
3	44345–26040	14.993 – 14.995 (0.59027 – 0.59035)
4	44345–26050	14.991 – 14.993 (0.59020 – 0.59027)

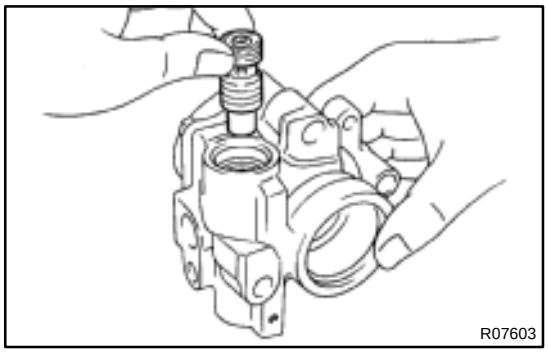

3. INSPECT FLOW CONTROL VALVE

(a) Coat the valve with power steering fluid and check that it falls smoothly into the valve hole by its own weight.

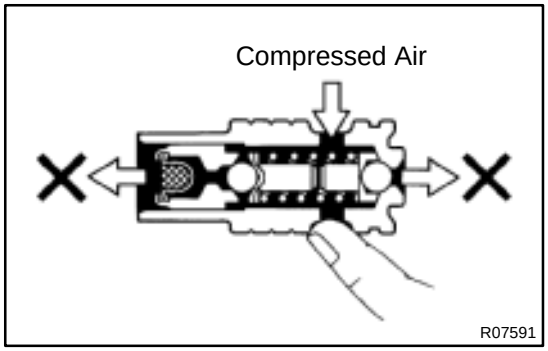

(b) Check the flow control valve for leakage. Close one of the holes and apply 392 – 490 kPa (4 – 5 kgf/cm^2, 57 – 71 psi) of compressed air into the opposite side hole, and confirm that air does not come out from the end holes.

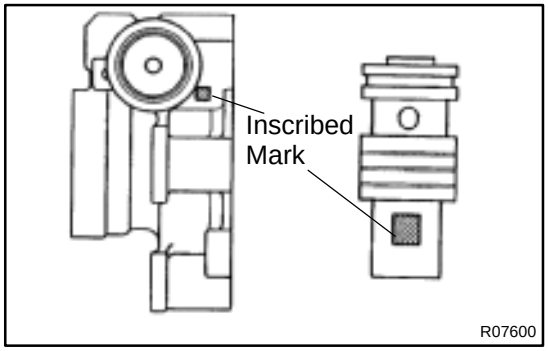

If necessary, replace the valve with the one having the same letter as inscribed on the front housing.

Inscribed mark: A, B, C, D, E or F

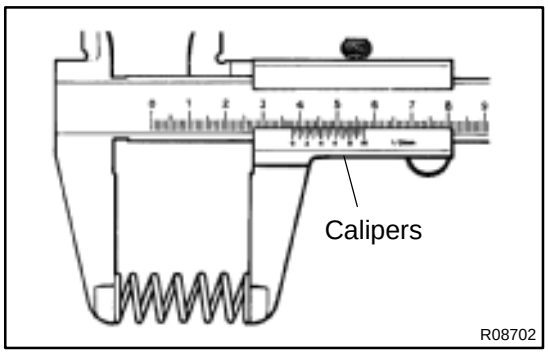

4. INSPECT COMPRESSION SPRING

Using calipers, measure the free length of the spring.

Minimum length: 33 mm (1.30 in.)

If it is not within the specification, replace the spring.

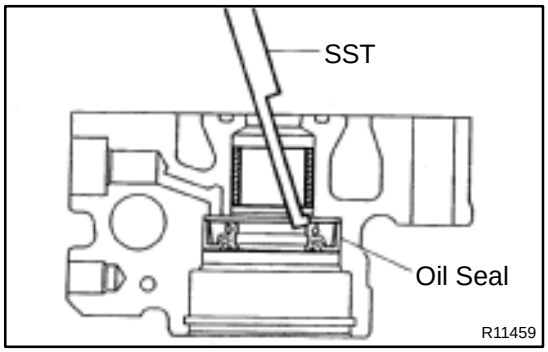

5. IF NECESSARY, REPLACE OIL SEAL

(a) Using SST, tap out the oil seal from the front housing.
SST 09631–10030

NOTICE:

Be careful not to damage the bushing of the front housing.

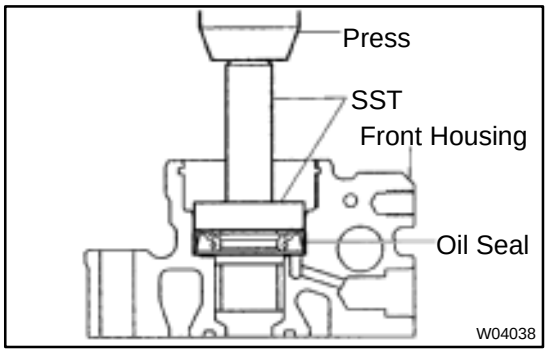

(b) Coat a new oil seal lip with power steering fluid.

(c) Using SST, press in the oil seal.
SST 09950–60010 (09951–00330),
09950–70010 (09951–07100)

NOTICE:

Make sure to install the oil seal facing the correct direction.

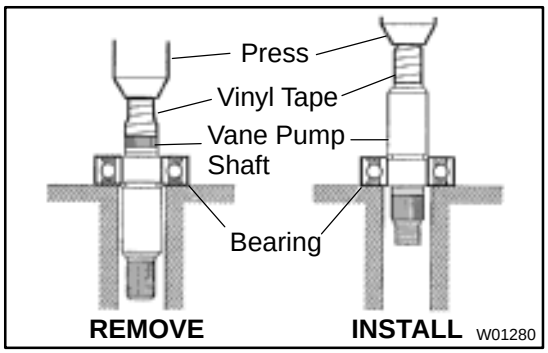

6. IF NECESSARY, REPLACE BEARING

(a) Wind vinyl tape on the serrated part of the vane pump shaft.

(b) Using a press, press out the bearing.

(c) Using a snap ring expander, replace the snap ring with new one.

NOTICE:

Be careful not to damage the shaft.

(d) Coat a new bearing with power steering fluid, and press the shaft into the bearing.

SR0LM–02

INSTALLATION

1. INSTALL PS VANE PUMP ASSEMBLY

Temporarily install the pump assembly set bolt and nut.

2. INSTALL DRIVE BELT

(a) Adjust drive belt tension and tighten the adjusting bolt (See page SR–3).

(b) Torque the PS vane pump assembly set bolt and nut.

Torque:
Bolt: 43 N·m (440 kgf·cm, 32 ft·lbf)
Nut: 39 N·m (400 kgf·cm, 29 ft·lbf)

3. w/ Cruise Control:

TORQUE 2 CRUISE CONTROL ACTUATOR ASSEMBLY SET BOLTS
Torque: 6 N·m (60 kgf·cm, 52 in.·lbf)

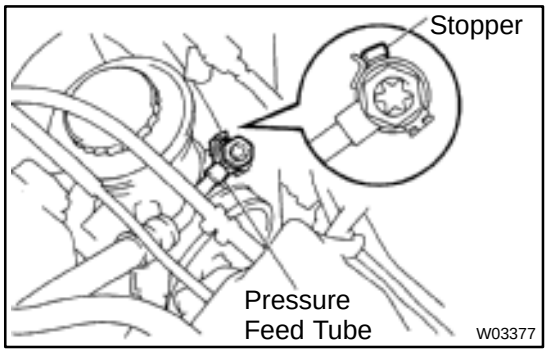

4. CONNECT PRESSURE FEED TUBE

Torque the union bolt over a new gasket.

Torque: 54 N·m (550 kgf·cm, 40 ft·lbf)

HINT:

Make sure the tube touches the stopper of the pressure feed No.2 tube as shown in the illustration, then torque the union bolt.

5. CONNECT RETURN HOSE

Install the clip.

6. BLEED POWER STEERING SYSTEM

(See page SR–4)

SR0LL–02

REASSEMBLY

NOTICE:

When using a vise, do not overtighten it.

1. COAT WITH POWER STEERING FLUID

(See page SR–20)

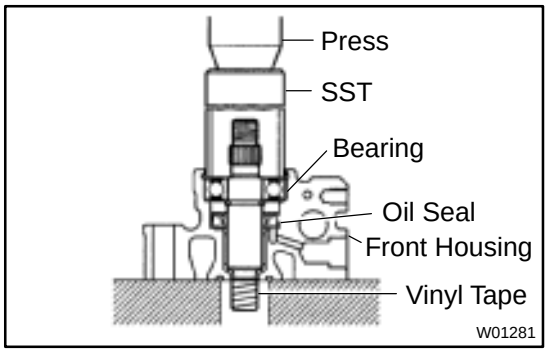

2. INSTALL VANE PUMP SHAFT WITH BEARING

(a) Wind vinyl tape on the serrated part of the vane pump shaft.

(b) Using SST, press in the shaft with the bearing to the housing.

SST 09608–04031

NOTICE:

Be careful not to damage the oil seal.

(c) Using snap ring pliers, install a new snap ring to the front housing.

3. INSTALL STRAIGHT PINS

Using a plastic hammer, tap in 2 new pins to the front housing.

NOTICE:

Be careful not to damage the pin.

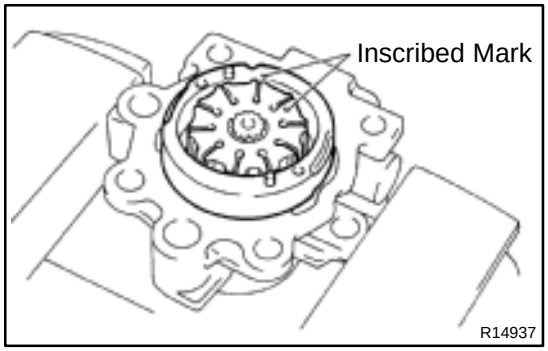

4. INSTALL CAM RING

Install the ring with the inscribed mark facing outward.

HINT:

Align the holes of the cam ring with the straight pins.

5. INSTALL VANE PUMP ROTOR

(a) Install the rotor to the pump shaft with the inscribed mark on the rotor facing outward.

(b) Using snap ring pliers, install a new snap ring to the vane pump shaft.

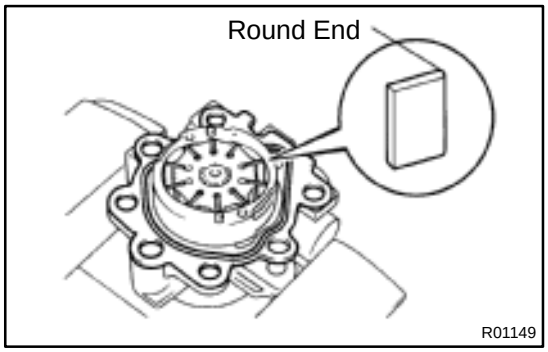

6. INSTALL VANE PLATES

Install the 10 plates with the round end facing outward.

7. INSTALL GASKET

Install a new gasket on the front housing.

8. INSTALL SIDE PLATE

Align the holes of the side plate and straight pins, and install the plate.

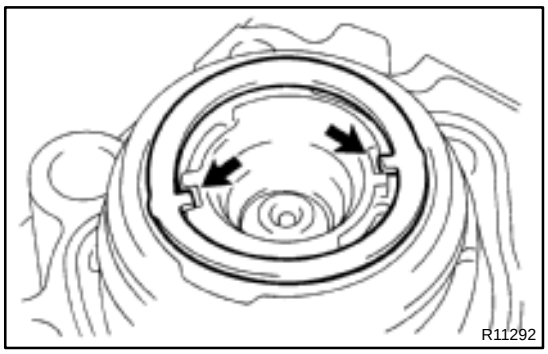

9. INSTALL WAVE WASHER

Install the washer so that its protrusions fit into the slots in the side plate.

10. INSTALL REAR HOUSING

(a) Coat 2 new O–rings with power steering fluid and install them to the housing.

(b) Torque the 2 bolts.

Torque: 24 N·m (240 kgf·cm, 17 ft·lbf)

11. INSTALL COMPRESSION SPRING, FLOW CONTROL VALVE AND PRESSURE PORT UNION

(a) Coat a new O–ring with power steering fluid and install it to the union.

(b) Install the valve facing the correct direction (See page SR–20).

(c) Torque the union.

Torque: 83 N·m (850 kgf·cm, 61 ft·lbf)

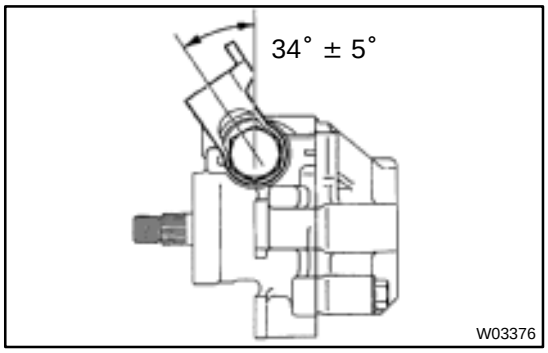

12. INSTALL PRESSURE FEED NO.2 TUBE

Install new gaskets on each side of the No.2 tube and torque the union bolt.

Torque: 69 N·m (700 kgf·cm, 51 ft·lbf)

HINT:

Install the tube at the angle shown in the illustration.

13. INSTALL OIL RESERVOIR

(a) Coat a new O–ring with power steering fluid and install it to the reservoir.

(b) Torque the 3 bolts.

Torque:
Front side bolt: 13 N·m (130 kgf·cm, 9 ft·lbf)
Rear side bolt: 24 N·m (240 kgf·cm, 17 ft·lbf)

14. INSTALL PROTECTOR

Torque the 2 bolts.

Torque: 5.5 N·m (55 kgf·cm, 48 in.·lbf)

15. INSTALL FRONT AND REAR BRACKETS

Torque the 3 bolts.

Torque: 43 N·m (440 kgf·cm, 32 ft·lbf)

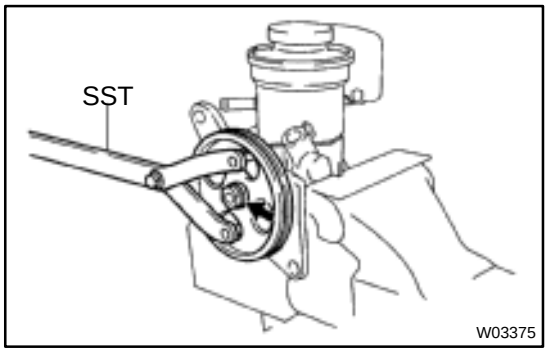

16. INSTALL VANE PUMP PULLEY

Using SST, stop the pulley rotating and torque the nut.

SST 09960–10010 (09962–01000, 09963–01000)

Torque: 43 N·m (440 kgf·cm, 32 ft·lbf)

17. MEASURE PS VANE PUMP ROTATING TORQUE (See page SR–23)

SR0LI–01

REMOVAL

1. DISCONNECT RETURN HOSE

Remove the clip.

NOTICE:

Take care not to spill fluid on the drive belt.

2. DISCONNECT PRESSURE FEED TUBE

Remove the union bolt and gasket.

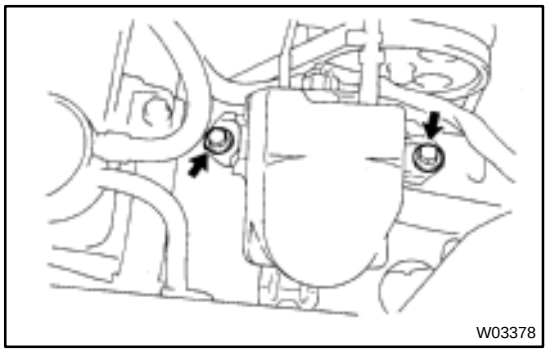

3. w/ Cruise Control:
REMOVE 2 CRUISE CONTROL ACTUATOR ASSEMBLY SET BOLTS

Loosen the cruise control actuator assembly.

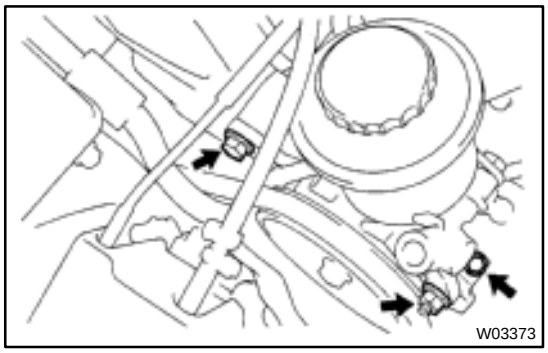

4. REMOVE DRIVE BELT

Loosen the pump assembly set bolt, nut and adjusting bolt.

5. REMOVE PS VANE PUMP ASSEMBLY

Remove the pump assembly set bolt and nut.

STEERING COLUMN

COMPONENTS

SR14O–01

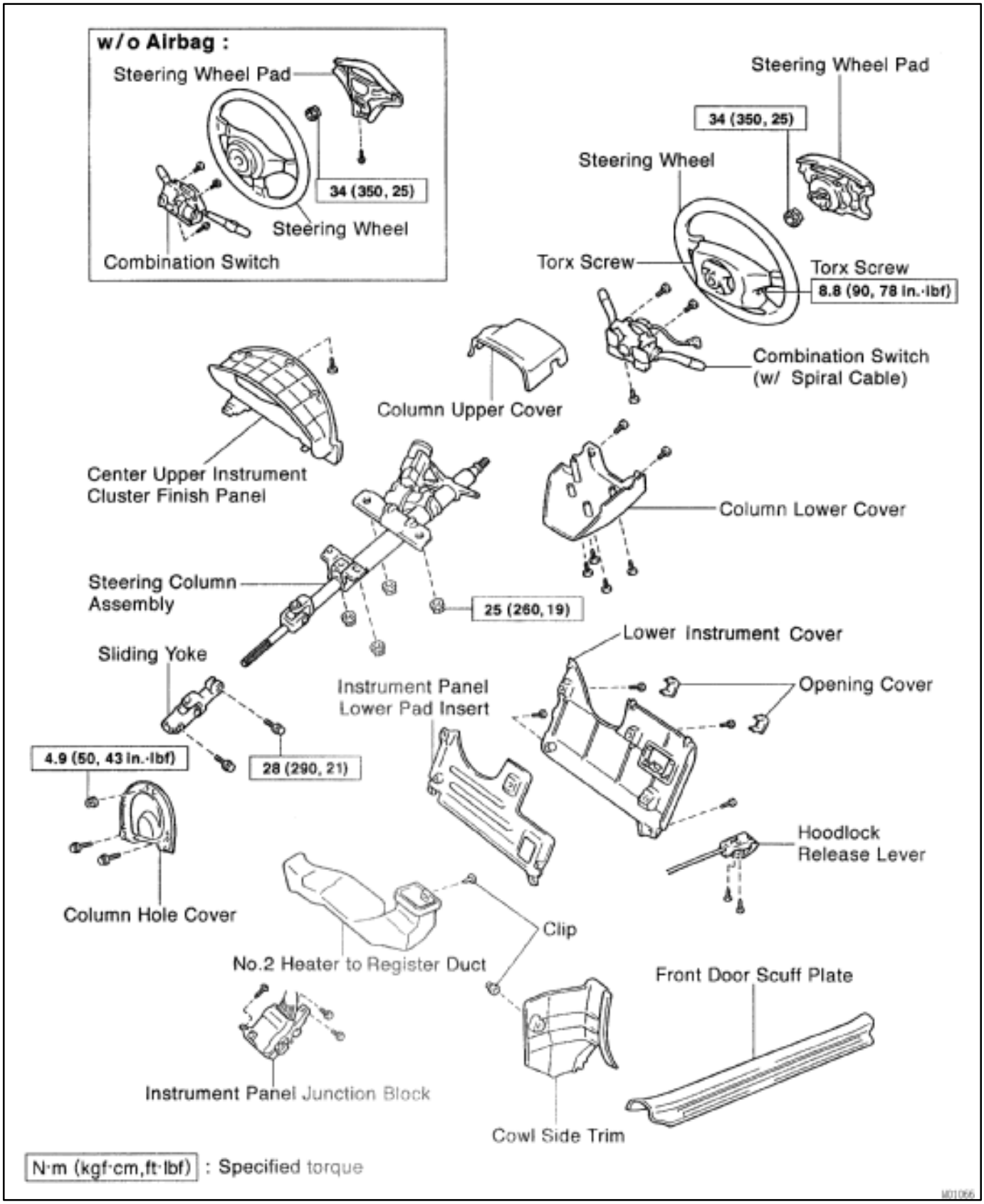

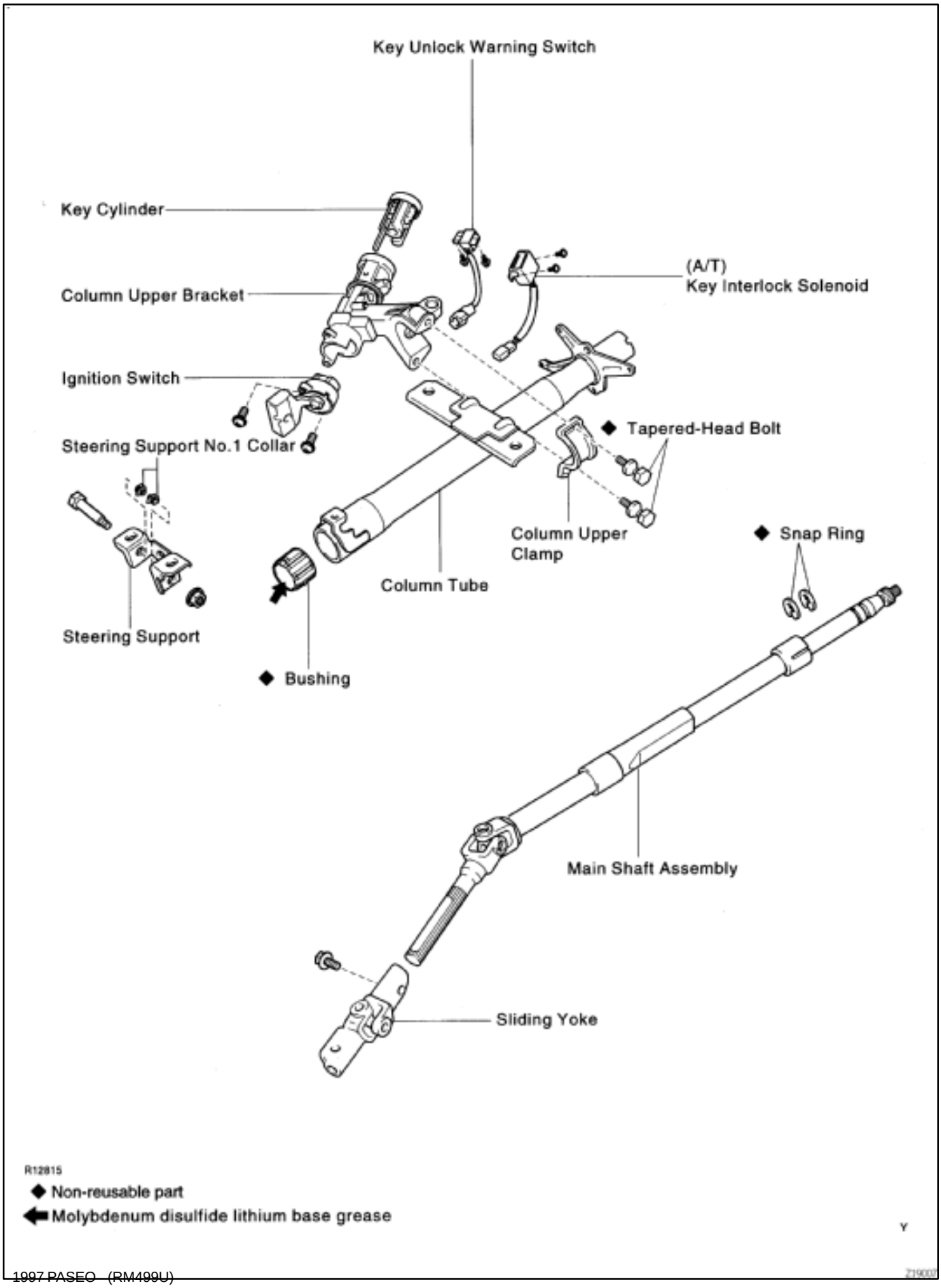
Key Unlock Warning Switch
Key Cylinder
Column Upper Bracket
Ignition Switch
Steering Support No.1 Collar
(A/T)
Key Interlock Solenoid
◆ Tapered-Head Bolt
Column Upper
Clamp
◆ Snap Ring
Column Tube
Steering Support
◆ Bushing
Main Shaft Assembly
Sliding Yoke
R12815
◆ Non-reusable part
⬅ Molybdenum disulfide lithium base grease
Y
Z19007

SR14Q–01

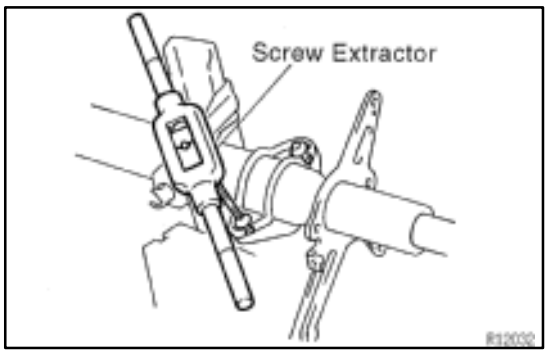

DISASSEMBLY

NOTICE:

When using a vise, do not overtighten it.

1. REMOVE COLUMN UPPER BRACKET AND COLUMN UPPER CLAMP

(a) Using a centering punch, mark the center of the 2 tapered–head bolts.

(b) Using a 3 – 4 mm (0.12 – 0.16 in.) drill, drill into the 2 bolts.

(c) Using a screw extractor, remove the 2 bolts.

2. REMOVE MAIN SHAFT ASSEMBLY

(a) Using snap ring expander, remove the snap ring from the shaft assembly.

(b) Using a plastic hammer, tap out the shaft assembly from the column tube.

(c) Using snap ring expander, remove the snap ring from the shaft assembly.

3. REMOVE STEERING SUPPORT

(a) Remove the set bolt and nut.

(b) Remove the 2 steering support No. 1 collars.

SR14R–01

INSPECTION

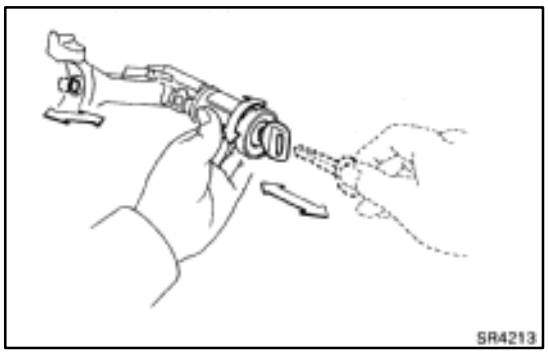

NOTICE:

When using a vise, do not overtighten it.

1. INSPECT STEERING LOCK OPERATION

Check that the steering lock mechanism operates properly.

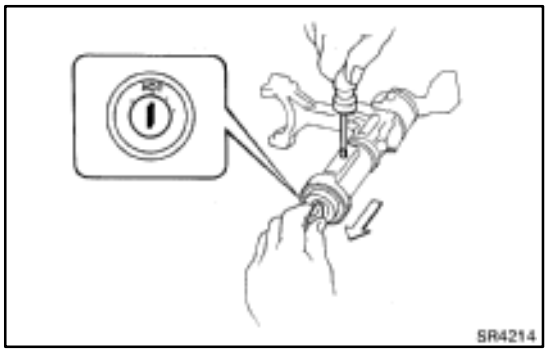

2. IF NECESSARY, REPLACE KEY CYLINDER

(a) Place the ignition key at the ACC position.

(b) Push down the stop pin with a screwdriver, and pull out the cylinder.

(c) Install a new cylinder.

HINT:

Make sure the key is at the ACC position.

3. INSPECT IGNITION SWITCH

(See page BE–11)

4. IF NECESSARY, REPLACE IGNITION SWITCH

(a) Remove the 2 screws from the upper bracket.

(b) Install a new ignition switch with the 2 screws.

5. INSPECT KEY UNLOCK WARNING SWITCH

(See page BE–11)

6. IF NECESSARY, REPLACE KEY UNLOCK WARNING SWITCH

(a) Slide the switch out of the column upper bracket.

(b) Slide the switch in the column upper bracket.

7. A/T:

INSPECT KEY INTERLOCK SOLENOID

(See page AX–15)

8. A/T:

IF NECESSARY, REPLACE KEY INTERLOCK SOLENOID

(a) Remove the 2 screws.

(b) Install a new solenoid with the 2 screws.

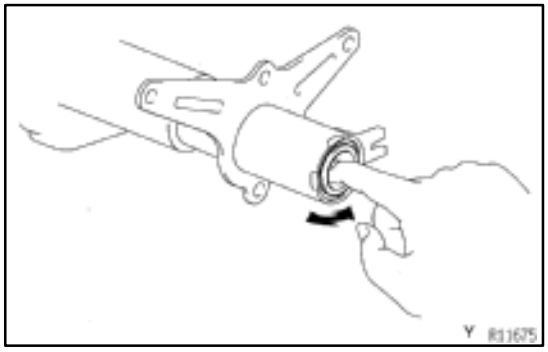

9. INSPECT BEARING

(a) Check the bearing rotation condition and check for abnormal noise.

If the bearing is worn or damaged, replace the column tube.

(b) Coat the inside of bearing with molybdenum disulfide lithium base grease.

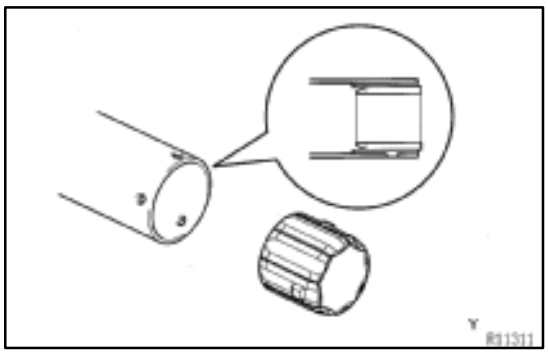

10. IF NECESSARY, REPLACE BUSHING

(a) Using a screwdriver, depress the projections on the bushing to release the bushing, then remove the bushing from the column tube.

(b) Coat the inside of new bushing with molybdenum disulfide lithium base grease.

(c) Align the projections on the bushing with the holes in the column tube. Install the bushing until the projections are firmly engaged in the holes.

SR14T–01

INSTALLATION

1. INSTALL STEERING COLUMN ASSEMBLY

(a) Torque the 4 column assembly set nuts.
Torque: 25 N·m (260 kgf·cm, 19 ft·lbf)

(b) Connect the connectors.

2. CONNECT SLIDING YOKE

(a) Temporarily install the sliding yoke and tighten the bolt A.

(b) Align the matchmarks on the sliding yoke and control valve shaft.

(c) Torque the bolt B.
Torque: 28 N·m (290 kgf·cm, 21 ft·lbf)

(d) Torque the bolt A.
Torque: 28 N·m (290 kgf·cm, 21 ft·lbf)

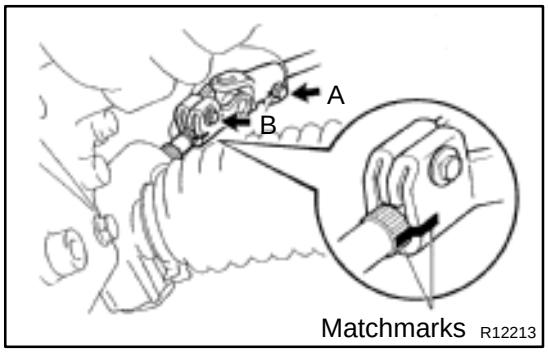

Matchmarks R12213

3. INSTALL COLUMN HOLE COVER

Torque the 2 bolts and nut.
Torque: 4.9 N·m (50 kgf·cm, 43 in.·lbf)

4. w/ Airbag:
INSTALL SPIRAL CABLE
(See page BE–14)

5. INSTALL COMBINATION SWITCH

(a) Tighten the 3 screws.

(b) w/ Airbag:
Connect the airbag connector.

(c) Connect the 3 connectors.

6. INSTALL NO. 2 HEATER TO REGISTER DUCT

(a) Install the clip.

(b) Connect the instrument panel junction block with the 3 screws.

7. INSTALL LOWER INSTRUMENT COVER

(a) Tighten the 4 panel set bolts.

(b) Connect the hood lock release lever with the 2 screws.

(c) Install the 2 opening covers.

8. INSTALL COWL SIDE TRIM

Install the clip.

9. INSTALL FRONT DOOR SCUFF PLATE

10. INSTALL UPPER AND LOWER COLUMN COVERS

Tighten the 6 screws.

11. INSTALL CENTER UPPER INSTRUMENT CLUSTER FINISH PANEL

(a) Connect the connector.

(b) Tighten the screw.

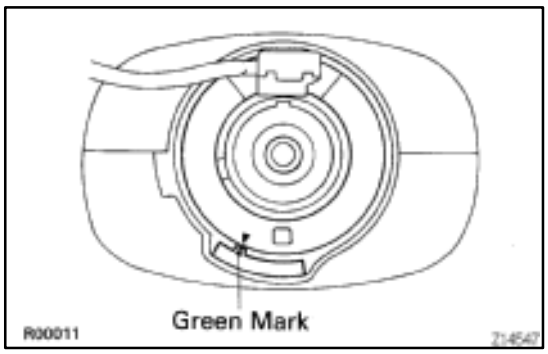

12. w/ Airbag:
CENTER SPIRAL CABLE

(a) Check that the front wheels are facing straight ahead.
(b) Turn the cable counterclockwise by hand until it becomes harder to turn.
(c) Then rotate the cable clockwise about 2.5 turns to align the marks.

HINT:
The cable will rotate about 2.5 turns to either left or right of the center.

13. INSTALL STEERING WHEEL

(a) Align the matchmarks on the steering wheel and main shaft assembly.
(b) Torque the steering wheel set nut.
Torque: 34 N·m (350 kgf·cm, 25 ft·lbf)
(c) Connect the connector.

14. w/ Airbag:
INSTALL STEERING WHEEL PAD

NOTICE:
- **Make sure the wheel pad is installed with the specified torque.**
- **If the wheel pad has been dropped, or there are cracks, dents or other defects on the case or connector, replace the wheel pad with a new one.**
- **When installing the wheel pad, take care that the wirings do not interfere with other parts and that they are not pinched between other parts.**

(a) Connect the airbag connector.

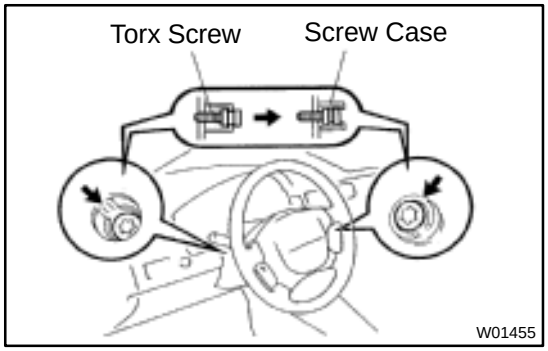

(b) Install the wheel pad after confirming that the circumference groove of the torx screws are caught on the screw case.
(c) Using a torx socket wrench, torque the 2 screws.
Torque: 8.8 N·m (90 kgf·cm, 78 in.·lbf)

15. w/ Airbag:
CHECK STEERING WHEEL CENTER POINT

(a) Connect the terminal.
(b) Install the pad.
(c) Install the screw.

SR14S–01

REASSEMBLY

NOTICE:

When using a vise, do not overtighten it.

1. COAT WITH MOLYBDENUM DISULFIDE LITHIUM BASE GREASE

(See page SR–10)

2. INSTALL STEERING SUPPORT

(a) Install the 2 steering support No. 1 collars.

(b) Torque the set bolt and nut.

Torque: 5.4 N·m (55 kgf·cm, 48 in.·lbf)

3. INSTALL MAIN SHAFT ASSEMBLY

(a) Using snap ring expander, install a new snap ring to the shaft assembly.

(b) Install the shaft assembly to the column tube.

(c) Using snap ring expander, install a new snap ring to the shaft assembly.

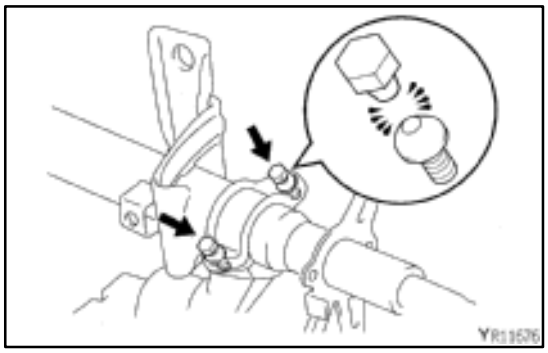

4. INSTALL COLUMN UPPER BRACKET AND COLUMN UPPER CLAMP

Tighten the 2 new tapered–head bolts until the bolts head break off.

SR14P–01

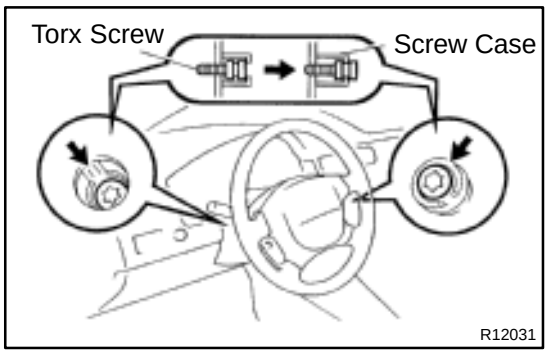

REMOVAL

1. w/ Airbag:

REMOVE STEERING WHEEL PAD

NOTICE:

- **If the airbag connector is disconnected with the ignition switch at ON or ACC, DTCs will be recorded.**
- **Never use airbag parts from another vehicle. When replacing parts, replace with new ones.**

(a) Place the front wheels facing straight ahead.

(b) Using a torx socket wrench, loosen the 2 torx screws until the groove along the screw circumference catches on the screw case.

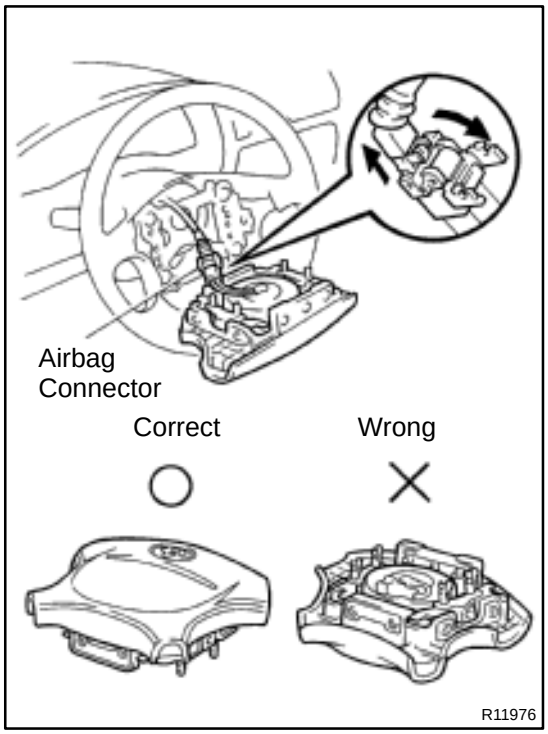

(c) Pull out the wheel pad from the steering wheel and disconnect the airbag connector.

CAUTION:

- **When storing the wheel pad, keep the upper surface of the pad facing upward.**
- **Never disassemble the wheel pad.**

NOTICE:

When removing the wheel pad, take care not to pull the airbag wire harness.

2. w/o Airbag:

REMOVE STEERING WHEEL PAD

(a) Remove the screw.

(b) Remove the pad.

(c) Disconnect the terminal.

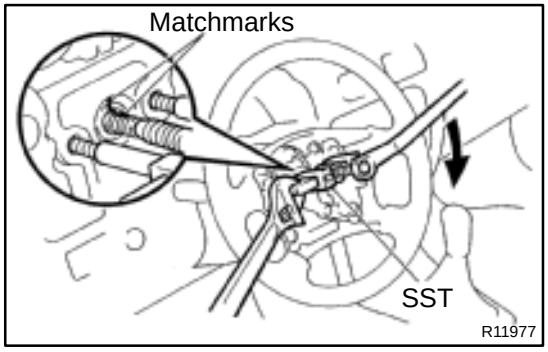

3. REMOVE STEERING WHEEL

(a) Disconnect the connector.

(b) Remove the steering wheel set nut.

(c) Place matchmarks on the steering wheel and main shaft assembly.

(d) Using SST, remove the wheel.

SST 09950–50010 (09951–05010, 09952–05010, 09953–05020, 09954–05020)

4. REMOVE FRONT DOOR SCUFF PLATE AND COWL SIDE TRIM

Remove the clip and trim.

5. REMOVE LOWER LH INSTRUMENT COVER AND LH INSTRUMENT PANEL LOWER PAD INSERT

(a) Remove the 2 screws and disconnect the hood lock release lever from the instrument cover.
(b) Remove the 2 opening covers from the instrument cover.
(c) Remove the 4 instrument cover set bolts.
(d) Remove the lower pad insert from the instrument cover.

6. DISCONNECT INSTRUMENT PANEL JUNCTION BLOCK

Remove the 3 screws.

7. REMOVE NO.2 HEATER TO REGISTER DUCT

Remove the clip.

8. REMOVE CENTER UPPER INSTRUMENT CLUSTER FINISH PANEL

(a) Remove the screw.
(b) Disconnect the connector.

9. REMOVE UPPER AND LOWER COLUMN COVERS

(a) Remove the 3 screws from the lower cover.
(b) Remove the screw from the upper cover.

10. REMOVE COMBINATION SWITCH WITH SPIRAL CABLE

(a) Disconnect the 3 connectors.
(b) w/ Airbag:
Disconnect the airbag connector.
(c) Remove the 3 screws.

11. w/ Airbag:
REMOVE SPIRAL CABLE
(See page BE–14)

NOTICE:
Do not disassemble the cable or apply oil to it.

12. REMOVE COLUMN HOLE COVER

Remove the 2 bolts and nut.

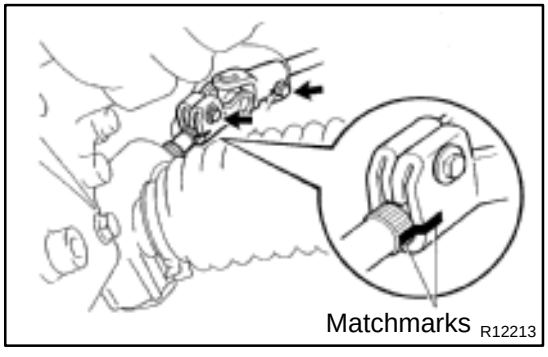

13. DISCONNECT SLIDING YOKE

(a) Place matchmarks on the sliding yoke and control valve shaft.
(b) Loosen bolt A and remove bolt B.

14. REMOVE SLIDING YOKE

(a) Remove the bolt A.

15. REMOVE STEERING CULUMN ASSEMBLY

(a) Disconnect the connectors.
(b) Remove the 4 column assembly set nuts.

STEERING SYSTEM

SR0L4–01

PRECAUTION

- **Care must be taken to replace parts properly because they could affect the performance of the steering system and result in a driving hazard.**
- **The PASEO is equipped with SRS (Supplemental Restraint System) such as the driver airbag and front passenger airbag. Failure to carry out service operation in the correct sequence could cause the SRS to unexpectedly deployed during servicing, possibly leading to a serious accident. Before servicing (including removal or installation of parts, inspection or replacement), be sure to read the precautionary notices in the RS section.**

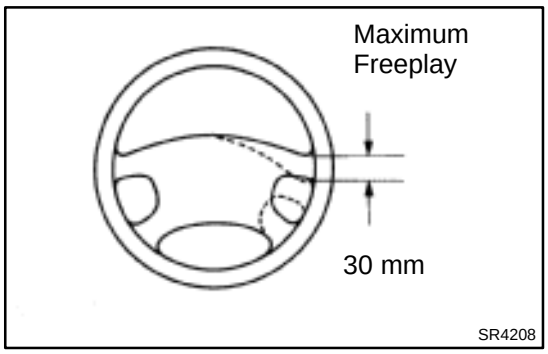

STEERING WHEEL

SR0LA–08

INSPECTION

1. CHECK STEERING WHEEL FREEPLAY

With the vehicle stopped and tires facing straight ahead, rock the steering wheel gently back and forth with light finger pressure.

Freeplay should not exceed the maximum.

Maximum freeplay: 30 mm (1.18 in.)

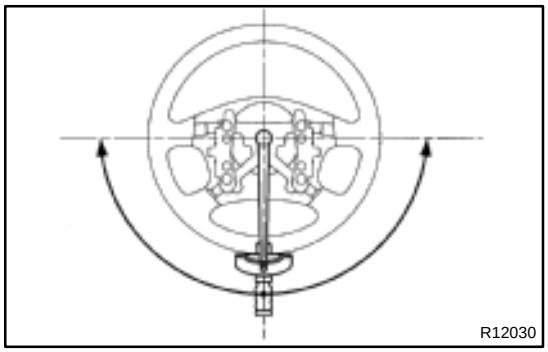

2. CHECK STEERING EFFORT

(a) Center the steering wheel.

(b) Remove the steering wheel pad (See page SR–12).

(c) Start the engine and run it at idle.

(d) Measure the steering effort in both directions.

Reference: 7.8 N·m (80 kgf·cm, 69 in.·lbf)

HINT:

Take the tire type, pressure and contact surface into consideration before making your diagnosis.

(e) Torque the steering wheel set nut.

Torque: 34 N·m (350 kgf·cm, 25 ft·lbf)

(f) Install the steering wheel pad (See page SR–18).

TROUBLESHOOTING

SR0L5–12

PROBLEM SYMPTOMS TABLE

Use the table below to help you find the cause of the problem. The numbers indicate the priority of the likely cause of the problem. Check each part in the order shown. If necessary, repair or replace these parts.

Symptom	Suspect Area	See page
Hard steering	1. Tires (Improperly inflated)	SA–2
	2. Power steering fluid level (Low)	SR–5
	3. Drive belt (Loose)	SR–3
	4. Front wheel alignment (Incorrect)	SA–4
	5. Steering system joints (Worn)	–
	6. Suspension arm ball joints (Worn)	SA–36
	7. Steering column (Binding)	–
	8. Power steering vane pump	SR–20
	9. Power steering gear	SR–30
Poor return	1. Tires (Improperly inflated)	SA–2
	2. Front wheel alignment (Incorrect)	SA–4
	3. Steering column (Binding)	–
	4. Power steering gear	SR–30
Excessive play	1. Steering system joints (Worn)	–
	2. Suspension arm ball joints (Worn)	SA–36
	3. Intermediate shaft, Sliding yoke (Worn)	–
	4. Front wheel bearing (Worn)	SA–10
	5. Power steering gear	SR–30
Abnormal noise	1. Power steering fluid level (Low)	SR–5
	2. Steering system joints (Worn)	–
	3. Power steering vane pump	SR–20
	4. Power steering gear	SR–30

AIR CONDITIONING

SERVICE DATA

SS0M7–02

Refrigerant charge volume		450 ± 50 g (15.87 ± 1.76 oz.)
Drive belt tension	New belt	165 ± 25 lbf
	Used belt	100 ± 20 lbf
Idle–up speed	Magnetic clutch not engaged	Approx. 700 rpm
	Magnetic clutch engaged	Approx. 1,500 rpm
Magnetic clutch clearance		0.5 ± 0.15 mm (0.02 ± 0.0059 in.)

SS0M8–02

TORQUE SPECIFICATION

Part tightened		N·m	kgf·cm	ft·lbf
Compressor x Suction hose		10	100	7
Compressor x Discharge hose		10	100	7
Compressor x Compressor bracket		25	250	18
Compressor bracket x Engine		37	375	27
Receiver x Liquid tube		5.4	55	48 in.·lbf
Condenser x Discharge hose		5.4	55	48 in.·lbf
Condenser x Liquid tube		5.4	55	48 in.·lbf
Cooling unit x Liquid tube		14	140	10
Cooling unit x Suction tube		32	330	24
Expansion valve x Evaporator		5.4	55	48 in.·lbf
Suction lines	Block joint	10	100	7
	Piping joint	32	330	24
Pressure plate x Compressor		13.2	135	9
Revolution detecting sensor x Compressor		11	110	8
Pressure switch x Liquid tube		10	100	7
Radiator fan x Radiator		7.0	70	61 in.·lbf
Condenser fan x Radiator		7.0	70	61 in.·lbf
PS pump x Engine		43	440	32

AUTOMATIC TRANSAXLE

SS0M4–02

SERVICE DATA

Line pressure (Wheel locked)		
	Engine idling	
	D range	373 – 422 kPa (3.8 – 4.3 kgf/cm^2, 54 – 61 psi)
	R range	637 – 794 kPa (6.5 – 8.1 kgf/cm^2, 92 – 115 psi)
	AT stall (Throttle valve fully opened)	
	D range	735 – 863 kPa (7.5 – 8.8 kgf/cm^2, 107 – 125 psi)
	R range	1,334 – 1,579 kPa (13.6 – 16.1 kgf/cm^2, 193 – 229 psi)
Engine stall revolution	D and R ranges	2,300 ± 200 rpm
Time lag	N → D range	Less than 1.2 seconds
	N → R range	Less than 1.5 seconds
Engine idle speed (A/C OFF)	N range	750 ± 50 rpm
Throttle cable adjustment (Throttle valve fully opened)		Between boot end face and inner cable stopper 0 – 1 mm (0 – 0.04 in.)
Drive plate runout	Max.	0.20 mm (0.0079 in.)
Torque converter runout	Max.	0.30 mm (0.0118 in.)
Torque converter installation distance		More than 13.4 mm (0.528 in.)
Shift point		
D range		
(Throttle valve fully opened)	1 → 2	44 – 51 km/h (27 – 32 mph)
	2 → 3	83 – 90 km/h (52 – 56 mph)
	3 → O/D	137 – 148 km/h (85 – 92 mph)
	O/D → 3	131 – 142 km/h (81 – 88 mph)
	3 → 2	76 – 82 km/h (47 – 51 mph)
	2 → 1	37 – 42 km/h (23 – 26 mph)
(Throttle valve fully closed)	3 → O/D	38 – 44 km/h (24 – 27 mph)
	O/D → 3	16 – 21 km/h (10 – 13 mph)
2 range		
(Throttle valve fully opened)	1 → 2	44 – 51 km/h (27 – 32 mph)
	2 → 1	37 – 42 km/h (23 – 26 mph)
(Throttle valve fully closed)	O/D → 3	83 – 89 km/h (52 – 56 mph)
L range		
(Throttle valve fully opened)	3 → 2	83 – 89 km/h (52 – 56 mph)
	2 → 1	41 – 47 km/h (25 – 29 mph)
Lock–up point	(Throttle valve opening 5 %)	
3rd gear (O/D main switch OFF)	Lock–up ON	64 – 70 km/h (40 – 43 mph)
	Lock–up OFF	58 – 63 km/h (36 – 39 mph)
O/D gear	Lock–up ON	67 – 73 km/h (42 – 45 mph)
	Lock–up OFF	61 – 66 km/h (38 – 41 mph)

SS0M5–02

TORQUE SPECIFICATION

Part tightened	N·m	kgf·cm	ft·lbf
Oil pan drain plug	17	175	13
Oil pan	4.9	50	43 in.·lbf
Valve body x Oil strainer	10	100	7
Valve body x Oil pipe bracket	10	100	7
Valve body x Oil pipe clamp	10	100	7
Solenoid wire assembly clamp	10	100	7
Detent spring	10	100	7
Valve body x Transaxle case	10	100	7
Park/neutral position switch x Transaxle case (Bolt)	5.4	55	48 in.·lbf
Park/neutral position switch (Nut)	6.9	70	61 in.·lbf
Shift control cable x Transaxle control shaft lever	15	150	11
LH engine mounting bolt	64	650	47
LH engine mounting bracket set bolt	48	490	35
Starter set bolt	39	400	29
Transaxle housing x Engine (Upper side)	64	650	47
Intake manifold stay	20	200	14
Engine rear mounting bracket x Engine rear mounting insulator	64	650	47
Engine rear mounting insulator set bolt			
A bolt	78	800	58
B bolt	90	920	67
Transaxle housing x Engine (Lower side)			
A bolt	46	470	34
B bolt	8	76	66 in.·lbf
C bolt	39	400	29
D bolt	25	255	18
E bolt	64	650	47
Torque converter clutch x Drive plate	18	185	13
Drive plate x Crankshaft	90	900	65

BODY ELECTRICAL

SS0MD–02

SERVICE DATA

INTEGRATION RELAY	
Key Unlock Warning System:	
3 – Ground (Constant)	Battery positive voltage
9 – Ground (Ignition switch LOCK or ACC)	No voltage
9 – Ground (Ignition switch ON)	Battery positive voltage
12 – Ground (Constant)	Battery positive voltage
DAYTIME RUNNING LIGHT MAIN RELAY (Wire Harness Side)	
2 – Ground (Ignition switch LOCK or ACC)	No voltage
2 – Ground (Ignition switch ON and START)	Battery positive voltage
6 – Ground (Constant)	Battery positive voltage
11 – Ground (Engine Stop)	No voltage
11 – Ground (Engine Running)	Battery positive voltage
TURN SIGNAL FLASHER	
Flashes / Minute	60 – 120
SPEEDOMETER (USING A SPEEDOMETER TESTER)	
Standard indication (km/h)	Allowable range (km/h)
20	17 – 24
40	38 – 46
60	57.5 – 67
80	77 – 88
100	96 – 109
120	115 – 130
140	134 – 151.5
160	153 – 173
Standard indication (mph)	Allowable range (mph)
20	18 – 24
40	38 – 44
60	58 – 66
80	78 – 88
100	98 – 110
TACHOMETER (ON–VEHICLE)	DC 13.5 V 25˚C (77˚F)
Standard indication (rpm)	Allowable range (rpm)
700	630 – 770
1,000	900 – 1,100
2,000	1,850 – 2,150
3,000	2,800 – 3,200
4,000	3,800 – 4,200
5,000	4,800 – 5,200
6,000	5,750 – 6,250
7,000	6,700 – 7,300
FUEL RECEIVER GAUGE	Resistance (Ω)
A – B	Approx. 115.8
A – C	Approx. 177.2

B – C	Approx. 61.4
FUEL SENDER GAUGE	
Float position : mm (in.)	Resistance (Ω)
F : Approx. 13 ± 3 (0.5 ± 0.1)	3 ± 1.0
1/2: Approx. 61 (2.4)	29 ± 4.8
E: Approx. 124.0 ± 3 (4.8 ± 0.1)	110 ± 7.7
ENGINE COOLANT TEMPERATURE RECEIVER GAUGE	Resistance (Ω)
D – E	Approx. 51.0
D – F	Approx. 152.8
E – F	Approx. 203.8
DOOR LOCK CONTROL RELAY CIRCUIT	
8 – Ground (Constant)	Battery positive voltage

BODY

TORQUE SPECIFICATION

SS0M6–03

Part tightened	N·m	kgf·cm	ft·lbf
FRONT BUMPER	–	–	–
Bumper cover x Body	5.5	56	49 in.·lbf
Reinforce plate x Reinforcement	5.5	56	49 in.·lbf
Front bumper extension x Body	8.5	87	75 in.·lbf
Reinforcement x Bumper arm	65	663	48
Bumper arm x Body	31	316	23
Reinforce plate x Bumper cover	5.5	56	49 in.·lbf
REAR BUMPER	–	–	–
Bumper cover x Body	5.5	56	49 in.·lbf
Reinforcement x Body	44	450	32
Bumper stay x Body	5.5	56	49 in.·lbf
Rear bumper side mounting bracket x Body	5.5	56	49 in.·lbf
HOOD	–	–	–
Hood hinge x Hood	13	130	9.4
Hood lock x Body	8.3	85	74 in.·lbf
FRONT DOOR	–	–	–
Door lock x Door panel	5.4	55	48 in.·lbf
Door hinge x Door panel	25	260	19
LUGGAGE COMPARTMENT DOOR AND HINGE	–	–	–
Door hinge x Door	5.4	55	48 in.·lbf
WIPER AND WASHER	–	–	–
Wiper arm	20	204	15
Wiper motor x Body	5.4	55	48 in.·lbf
Wiper link x Body	5.4	55	48 in.·lbf
INSTRUMENT PANEL	–	–	–
Steering wheel nut	34	350	25
Reinforcement x Passenger airbag assembly	20	205	15
FRONT SEAT	–	–	–
Seat adjuster x Seatback frame	43	440	32
Seat adjuster x Body	37	375	27
Seat cushion x Seat adjuster	21	210	15
REAR SEAT	–	–	–
Seat hinge x Seatback	18	185	13
Seat hinge x Body	18	185	13
SEAT BELT	–	–	–
Front Seat Belt	–	–	–
Shoulder anchor x Body	41	420	30
Retractor x Body	41	420	30
Inner belt x Seat	41	420	30
Rear Seat Belt	–	–	–
Shoulder anchor x Body	41	420	30
Outer belt anchor x Body	41	420	30

Retractor x Body	41	420	30
Inner belt x Body	41	420	30

BRAKE

SERVICE DATA

SS0AA–02

Brake pedal height (from asphalt sheet)		138.5 – 148.5 mm (5.453 – 5.846 in.)
Brake pedal freeplay		1 – 6 mm (0.04 – 0.24 in.)
Brake pedal reserve distance at 490 N (50 kgf, 110.2 lbf)	w/o ABS	More than 60 mm (2.36 in.)
Brake pedal reserve distance at 490 N (50 kgf, 110.2 lbf)	w/ ABS	More than 55 mm (2.17 in.)
Brake booster push rod to piston clearance (w/ SST)		0 mm (0 in.)
Front brake pad thickness	STD	10.0 mm (0.394 in.)
Front brake pad thickness	Minimum	1.0 mm (0.039 in.)
Front brake disk thickness	STD	18.0 mm (0.709 in.)
Front brake disk thickness	Minimum	16.0 mm (0.630 in.)
Front brake disk runout	Maximum	0.05 mm (0.0020 in.)
Rear brake drum inside diameter	STD	180.0 mm (7.087 in.)
Rear brake drum inside diameter	Maximum	181.0 mm (7.126 in.)
Rear brake shoe lining thickness	STD	4.0 mm (0.157 in.)
Rear brake shoe lining thickness	Minimum	1.0 mm (0.039 in.)
Rear brake drum to shoe clearance		0.6 mm (0.024 in.)
Parking brake lever travel at 196 N (20 kgf, 44.1 lbf)		5 – 8 clicks

SS0AB–07

TORQUE SPECIFICATION

Part tightened	N·m	kgf·cm	ft·lbf
Master cylinder x Piston stopper bolt	10	100	7
Master cylinder x Reservoir	1.8	18	16 in.·lbf
Master cylinder x Brake booster	13	130	9
Brake line union nut	15	155	11
Brake booster clevis lock nut	26	260	19
Brake booster x Pedal braket	14	145	10
Front disk brake caliper installation bolt	25	255	18
Bleeder plug	8.3	85	74 in.·lbf
Front disc brake torque plate x Steering knuckle	88	900	65
Front disc brake caliper x Flexible hose	30	310	22
Rear drum brake wheel cylinder x Backing plate	10	100	7
ABS actuator assembly x Body	19	195	14
ABS actuator x ABS actuator bracket assembly	7.8	80	69 in.·lbf
ABS actuator x ABS actuator No.3 bracket	19	195	14
Front speed sensor x Steering knuckle	8.0	82	71 in.·lbf
Front speed sensor wire harness clamp installation bolt.	5.0	55	48 in.·lbf
Rear speed sensor x Axle beam	8.0	82	71 in.·lbf
Rear speed sensor wire harness clamp installation bolt	5.0	55	48 in.·lbf

CHARGING

SS0NN–02

SERVICE DATA

Battery	Specific gravity (Except maintenance–free battery)		
		at 20˚C (68˚F)	1.25–1.29
	Voltage (Maintenance–free battery)	at 20˚C (68˚F)	12.5–12.9V
Drive belt	Tension	New belt	160 ± 20 lbf
		Used belt	100 ± 20 lbf
Generator	Rated output		12 V 70 A, 60 A
	Rotor coil resistance		
	Type A	at 20˚C (68˚F)	2.1 – 2.5 Ω
	Type B	at 20˚C (68˚F)	2.7 – 3.1 Ω
	Type C	at 20˚C (68˚F)	2.7 – 3.1 Ω
	Slip ring diameter	STD	14.2 – 14.4 mm (0.559 – 0.567 in.)
		Minimum	12.8 mm (0.504 in.)
	Brush exposed length	STD	9.5 – 11.5 mm (0.374 – 0.453 in.)
		Minimum	1.5 mm (0.059 in.)
Voltage regulator	Regulating voltage		13.5 – 15.1 V

SS0NO–02

TORQUE SPECIFICATION

Part tightened		N·m	kgf·cm	ft·lbf
Generator x Generator bracket		58	580	41
Generator x Adjusting lever		12	120	9
Bearing retainer x Drive end frame		2.6	27	23 in.·lbf
Rectifier end frame x Drive end frame		4.5	46	40 in.·lbf
Generator pulley x Rotor		110.5	1,125	81
Rectifier holder x Coil lead on rectifier end frame		1.96	20	17 in.·lbf
Rear end cover x Rectifier holder	Type A	4.4	45	40 in.·lbf
	Type B	2.6	27	23 in.·lbf
	Type C	5.4	55	47 in.·lbf
Terminal plate x Rectifier holder	Type C	3.8	39	34 in.·lbf
Terminal insulator x Rectifier holder		4.1	42	36 in.·lbf
End cover x Rectifier end frame, Drive end frame	Type C	5.4	55	47 in.·lbf

CLUTCH

SERVICE DATA

SS0KV–01

Pedal height from asphalt sheet		151.0 – 161.0 mm (5.944 – 6.338 in.)
Pedal freeplay		1.0 – 5.0 mm (0.039 – 0.197 in.)
Push rod play at pedal top		5.0 – 15.0 mm (0.197 – 0.591 in.)
Clutch release point from pedal full stroke end position		25 mm (0.984 in.) or more
Clutch start switch	ON–OFF Stroke	5.0 ± 0.5 mm (0.197 ± 0.020 in.)
Slotted spring pin protrusion		1.5 – 3.5 mm (0.059 – 0.138 in.)
Disc rivet head depth	Min	0.3 mm (0.012 in.)
Disc runout	Max	0.8 mm (0.032 in.)
Flywheel runout	Max	0.1 mm (0.004 in.)
Diaphragm spring finger wear	Max depth	0.6 mm (0.024 in.)
Diaphragm spring finger wear	Max width	5.0 mm (0.197 in.)
Diaphragm spring tip non–alignment	Max	0.5 mm (0.020 in.)

SS0KW–01

TORQUE SPECIFICATION

Part tightened	N·m	kgf·cm	ft·lbf
Clutch line union	15	155	11
Master cylinder installation nut	15	145	10
Master cylinder lock nut	12	120	9
Bleeder plug	8.3	85	57 in.·lbf
Release cylinder installation bolt	12	120	9
Clutch cover x Flywheel	19	195	14
Flywheel set bolt	90	900	65

COOLING

SS0NV–02

SERVICE DATA

Thermostat	Valve opening temperature		80 – 84˚C (176 – 183˚F)
	Valve lift	at 95˚C (203˚F)	8 mm (0.31 in.) or more
Radiator cap	Relief valve opening pressure	STD	74 – 103 kPa (0.75 – 1.05 kgf/cm^2, 10.7 – 14.9 psi)
		Minimum	59 kPa (0.6 kgf/cm^2, 8.5 psi)
Electriccooling fan	Rotating amperage at 20˚CM (68˚F)	No.1 M/T	5.7 – 7.7 A
		A/T	8.6 – 11.6 A
		No.2	6.4 – 7.4 A

SS0NW–02

TORQUE SPECIFICATION

Part tightened	N·m	kgf·cm	ft·lbf
Drain plug x Cylinder block	25	250	18
Water pump x Cylinder block	17.5	175	13
Oil dipstick guide x RH engine mounting bracket	18.5	185	14
Water inlet pipe x Cylinder block	7.5	75	65 in.·lbf
Intake manifold stay x Cylinder block	20	200	15
Water inlet x Water outlet housing	5.0	50	43 in.·lbf
Oil cooler x Radiator lower tankC	15.0	150	11
Oil cooler pipe x Oil cooler	8.5	85	75 in.·lbf
Radiator upper support x Body	12	120	9
No.1 cooling fan x Radiator	7.0	70	61 in.·lbf
No.2 cooling fan x Radiator	7.0	70	61 in.·lbf

ENGINE MECHANICAL

SS0NZ–01

SERVICE DATA

Compression pressure	at 250 rpm	STD	1,275 kPa (13.0 kgf/cm^2, 185 psi) or more
		Minimum	981 kPa (10.0 kgf/cm^2, 142 psi)
	Difference of pressure between each cylinder		100 kPa (1.0 kgf/cm^2, 14 psi) or less
Valve clearance	Valve clearance at Cold	Intake	0.15 – 0.25 mm (0.006 – 0.010 in.)
		Exhaust	0.31 – 0.41 mm (0.012 – 0.016 in.)
	Adjusting shim (for repair part)	No.02	2.500 mm (0.0984 in.)
		No.04	2.550 mm (0.1004 in.)
		No.06	2.600 mm (0.1024 in.)
		No.08	2.650 mm (0.1043 in.)
		No.10	2.700 mm (0.1063 in.)
		No.12	2.750 mm (0.1083 in.)
		No.14	2.800 mm (0.1102 in.)
		No.16	2.850 mm (0.1122 in.)
		No.18	2.900 mm (0.1142 in.)
		No.20	2.950 mm (0.1161 in.)
		No.22	3.000 mm (0.1181 in.)
		No.24	3.050 mm (0.1201 in.)
		No.26	3.100 mm (0.1220 in.)
		No.28	3.150 mm (0.1240 in.)
		No.30	3.200 mm (0.1260 in.)
		No.32	3.250 mm (0.1280 in.)
		No.34	3.300 mm (0.1299 in.)
Ignition timing	w/ Terminals TE1 and E1 connected of DLC1		10˚ BTDC @ idle
Idle speed			750 ± 50 rpm
Idler pulley tension spring	Free length		38.4 mm (1.512 in.)
	Installed load at 47.4 mm (1.866 in.)		32 N (3.3 kgf, 7.3 lbf)
Cylinder head	Warpage		
	Cylinder block side	Maximum	0.05 mm (0.0020 in.)
	Manifold side	Maximum	0.05 mm (0.0020 in.)
	Valve guide bore diameter	STD	11.000 – 11.027 mm (0.4331 – 0.4342 in.)
		O/S 0.05	11.050 – 11.077 mm (0.4350 – 0.4361 in.)
	Valve seat		
	Refacing angle	Intake	30˚, 45˚, 60˚, 75˚
		Exhaust	30˚, 45˚, 75˚
	Contacting angle		45˚
	Contacting width		1.0 – 1.4 mm (0.039 – 0.055 in.)
Valve guide bushing	Inside diameter		6.010 – 6.030 mm (0.2366 – 0.2374 in.)
	Outside diameter (for repair part)	STD	11.048 – 11.059 mm (0.4350 – 0.4354 in.)
		O/S 0.05	11.098 – 11.109 mm (0.4369 – 0.4374 in.)
Valve	Valve overall length	STD (Intake)	93.45 mm (3.6791 in.)
		(Exhaust)	93.89 mm (3.6965 in.)
		Minimum (Intake)	92.95 mm (3.6594 in.)
		(Exhaust)	93.39 mm (3.6768 in.)
	Valve face angle		44.5˚
	Stem diameter	Intake	5.970 – 5.985 mm (0.2350 – 0.2356 in.)
		Exhaust	5.965 – 5.980 mm (0.2348 – 0.2354 in.)
	Stem oil clearance	STD (Intake)	0.025 – 0.060 mm (0.0010 – 0.0024 in.)
		(Exhaust)	0.030 – 0.065 mm (0.0012 – 0.0026 in.)
		Maximum (Intake)	0.08 mm (0.0031 in.)
		(Exhaust)	0.10 mm (0.0039 in.)
	Margin thickness	STD	0.8 – 1.2 mm (0.031 – 0.047 in.)
		Minimum	0.5 mm (0.020 in.)

Valve spring	Deviation	Maximum	2.0 mm (0.079 in.)
	Free length		53.58 mm (2.1094 in.)
	Installed tension at 31.8 mm (1.252 in.)		148 – 164 N (15.1 – 16.7 kgf, 33.3 – 36.8 lbf)
Camshaft	Thrust clearance	STD	0.045 – 0.100 mm (0.0018 – 0.0039 in.)
		Maximum	0.12 mm (0.0047 in.)
	Cam lobe height	STD (Intake)	41.514 – 41.614 mm (1.6344 – 1.6383 in.)
		(Exhaust)	41.011 – 41.111 mm (1.6146 – 1.6185 in.)
		Maximum (Intake)	41.35 mm (1.6279 in.)
		(Exhaust)	40.85 mm (1.6083 in.)
	Journal diameter	Exhaust No.1	24.949 – 24.965 mm (0.9822 – 0.9829 in.)
		Others	22.949 – 22.965 mm (0.9035 – 0.9041 in.)
	Journal oil clearance	STD	0.035 – 0.072 mm (0.0014 – 0.0028 in.)
		Maximum	0.10 mm (0.0039 in.)
	Circle runout		0.04 mm (0.0016 in.)
	Camshaft gear backlash	STD	0.020 – 0.200 mm (0.0008 – 0.0079 in.)
		Maximum	0.30 mm (0.0118 in.)
	Camshaft gear spring end free distance		22.5 – 22.9 mm (0.886 – 0.902 in.)
Valve lifter	Lifter diameter		27.975 – 27.985 mm (1.1014 – 1.1018 in.)
	Lifter bore diameter		28.000 – 28.021 mm (1.1024 – 1.1032 in.)
	Oil clearance	STD	0.015 – 0.046 mm (0.0006 – 0.0018 in.)
		Maximum	0.10 mm (0.0039 in.)
Manifold	Warpage	Maximum (Intake)	0.1 mm (0.004 in.)
		(Exhaust)	0.5 mm (0.020 in.)
Spark tube	Protrusion		47.5– 48.8 mm (1.870 – 1.909 in.)
Cylinder block	Cylinder head surface warpage	Maximum	0.05 mm (0.0020 in.)
	Cylinder bore diameter	Mark ”1”	74.000 – 74.010 mm (2.9134 – 2.9138 in.)
		Mark ”2”	74.011 – 74.020 mm (2.9138 – 2.9142 in.)
		Mark ”3”	74.021 – 74.030 mm (2.9142 – 2.9146 in.)
		Maximum	74.23 mm (2.9244 in.)
	Main journal bore diameter (Reference)	Mark 1	54.018 – 54.024 mm (2.1267 – 2.1269 in.)
		Mark 2	54.025 – 54.030 mm (2.1270 – 2.1272 in.)
		Mark 3	54.031 – 54.036 mm (2.1272 – 2.1274 in.)
Piston and Piston ring	Piston diameter	Mark ”1”	73.900 – 73.910 mm (2.9094 – 2.9098 in.)
		Mark ”2”	73.910 – 73.920 mm (2.9098 – 2.9102 in.)
		Mark ”3”	73.920 – 73.930 mm (2.9102 – 2.9106 in.)
	Piston oil clearance	STD	0.09 – 0.11 mm (0.0035 – 0.0043 in.)
		Maximum	0.13 mm (0.0051 in.)
	Piston ring groove clearance	No.1	0.04 – 0.08 mm (0.0016 – 0.0031 in.)
		No.2	0.03 – 0.07 mm (0.0012 – 0.0028 in.)
	Piston ring end gap	STD (No.1)	0.26 – 0.48 mm (0.0102 – 0.0189 in.)
		(No.2)	0.36 – 0.57 mm (0.0142 – 0.0224 in.)
		(Oil)	0.13 – 0.50 mm (0.0059 – 0.0197 in.)
		Maximum (No.1)	1.07 mm (0.0421 in.)
		(No.2)	1.02 mm (0.0354 in.)
		(Oil)	1.10 mm (0.0433 in.)

Connecting rod	Thrust clearance	STD	0.15 – 0.35 mm (0.0059 – 0.0138 in.)
		Maximum	0.45 mm (0.0177 in.)
	Connecting rod oil clearance	STD (STD)	0.016 – 0.048 mm (0.0006 – 0.0019 in.)
		(U/S 0.25)	0.015 – 0.058 mm (0.0006 – 0.0023 in.)
		Maximum	0.08 mm (0.0031 in.)
	Connecting rod big end inside diameter (Reference)	Mark 1	46.000 – 46.007 mm (1.8110 – 1.8113 in.)
		Mark 2	46.007 – 46.014 mm (1.8113 – 1.8116 in.)
		Mark 3	46.014 – 46.021 mm (1.6116 – 1.8118 in.)
	Connecting rod bearing center wall thickness (Reference)	STD (Mark 1)	1.487 – 1.491 mm (0.0585 – 0.0587 in.)
		(Mark 2)	1.491 – 1.495 mm (0.0587 – 0.0589 in.)
		(Mark 3)	1.495 – 1.499 mm (0.0589 – 0.0590 in.)
		U/S 0.25	1.609 – 1.615 mm (0.0633 – 0.0636 in.)
	Rod out–of–alignment per 100 mm (3.94 in.)	Maximum	0.03 mm (0.0012 in.)
	Rod twist per 100 mm (3.94 in.)	Maximum	0.05 mm (0.0020 in.)
Crankshaft	Thrust clearance	STD	0.020 – 0.200 mm (0.0008 – 0.0078 in.)
		Maximum	0.30 mm (0.0118 in.)
	Thrust washer thickness	STD	2.430 – 2.480 mm (0.0957 – 0.0976 in.)
		O/S 0.125	2.493 – 2.543 mm (0.0981 – 0.1001 in.)
	Main journal oil clearance	STD (STD)	0.016 – 0.035 mm (0.0006 – 0.0014 in.)
		(U/S 0.25)	0.015 – 0.055 mm (0.0006 – 0.0022 in.)
		Maximum	0.08 mm (0.0031 in.)
	Main journal diameter	STD	49.985 – 50.000 mm (1.9679 – 1.9685 in.)
		U/S 0.25	49.745 – 49.755 mm (1.9585 – 1.9589 in.)
	Main journal bore diameter (Reference)	Mark 1	54.018 – 54.024 mm (2.1267 – 2.1269 in.)
		Mark 2	54.025 – 54.030 mm (2.1270 – 2.1272 in.)
		Mark 3	54.031 – 54.036 mm (2.1272 – 2.1274 in.)
	Main journal diameter (Reference)	STD (Mark 0)	49.996 – 50.000 mm (1.9683 – 1.9685 in.)
		(Mark 1)	49.991 – 49.995 mm (1.9081 – 1.9683 in.)
		(Mark 2)	49.985 – 49.990 mm (1.9679 – 1.9681 in.)
	Main bearing center wall thickness (Reference)	STD (Mark 1)	1.997 – 2.000 mm (0.0786 – 0.0787 in.)
		(Mark 2)	2.001 – 2.003 mm (0.0788 – 0.0789 in.)
		(Mark 3)	2.004 – 2.006 mm (0.0789 – 0.0790 in.)
		(Mark 4)	2.007 – 2.009 mm (0.0790 – 0.0791 in.)
		(Mark 5)	2.010 – 2.012 mm (0.0791 – 0.0792 in.)
		U/S 0.25	2.118 – 2.124 mm (0.0834 – 0.0836 in.)
	Crank pin diameter	STD	42.985 – 43.000 mm (1.6923 – 1.6929 in.)
		U/S 0.25	42.745 – 42.755 mm (1.6829 – 1.6833 in.)
	Circle runout	Maximum	0.06 mm (0.0024 in.)
	Main journal taper and out–of–round	Maximum	0.08 mm (0.0031 in.)
	Crank pin taper and out–of–round	Maximum	0.07 mm (0.0028 in.)

SS0O0–02

TORQUE SPECIFICATION

Part tightened	N·m	kgf·cm	ft·lbf
Cylinder head cover x Cylinder head	7.0	70	61 in.·lbf
No.2 idler pulley x Cylinder head	28	280	20
Camshaft timing pulley x Camshaft	51	510	37
No.1 idler pulley x Cylinder block	18.5	185	13
Crankshaft pulley x Crankshaft	155	1,550	112
No.2 crankshaft pulley x Crankshaft pulley	19	195	14
RH engine mounting insulator x RH engine mounting bracket	64	650	47
RH engine mounting insulator x Body	73	740	54
No.1 engine hanger x Cylinder head	21	210	15
No.2 engine hanger x Cylinder head	53	530	38
Cylinder head x Cylinder block 1st 2nd	45 Turn 90°	450 Turn 90°	33 Turn 90°
Camshaft bearing cap x Cylinder head	13	130	9
Intake manifold x Cylinder head	19.5	195	14
Intake manifold stay x Intake manifold	20	200	15
Intake manifold stay x Cylinder block	20	200	15
Exhaust manifold x Cylinder head	48	480	35
Exhaust manifold stay x Cylinder block	40	400	29
Exhaust manifold stay x Exhaust manifold	40	400	29
Exhaust manifold heat insulator x Exhaust manifold	8.0	80	69 in.·lbf
Water outlet housing x Cylinder head	17.5	175	13
Camshaft position sensor x Cylinder head	8.0	80	69 in.·lbf
PS pump bracket x Cyinder head	43	440	32
Fuel inlet hose x Fuel filter (Union bolt)	29	300	22
Front exhaust pipe x Exhaust manifold	62	630	46
Connecting rod cap x Connecting rod	40	400	29
Crankshaft bearing cap x Cylinder block	58	580	42
Rear oil seal retainer x Cylinder block	7.5	75	65 in.·lbf
Oil filter union x Cylinder block	25	250	18
Oil pressure switch x Cylinder block	13	130	9
RH engine mounting bracket x Cylinder block	58	590	43
Knock sensor x Cylinder block	45	450	33
Generater bracket x Cylinder block	24	240	18
Rear end plate x Cylinder block	10	100	7
Flywheel x Crankshaft	90	900	65
Drive plate x Crankshaft	90	900	65
Drive plate x Torque converter clutch	25	250	18
A/C compressor bracket x Cylinder block	27	280	20
PS pump adjusting strut x Cylinder block	21	210	15
LH engine mounting bracket x Transaxle case	65	650	47
LH engine mounting bracket x Insulator	49	490	35
LH engine mounting bracket x Ground strap	49	490	35
Rear engine mounting bracket x Insulator	65	650	47

A/C compressor x Bracket	25	250	18
Clutch release cylinder x Transaxle case	13	130	9
Front exhaust pipe x Exhaust manifold	62	630	46
Front exhaust pipe x Tail pipe (clamp bolt)	19	190	14
Heated oxygen sensor x Front exhaust pipe	44	450	33

IGNITION

SS0NR–01

SERVICE DATA

High–tension cord	Resistance	Maximum	25 kΩ per cord
Spark plug	Recommended spark plug	DENSO	K16TR11
		NGK	BKR5EKB11
	Correct electrode gap		1.1 mm (0.043 in.)
Ignition coil	Primary coil resistance	at cold	0.67 – 1.05 Ω
		at hot	0.85 – 1.23 Ω
	Secondary coil resistance	at cold	9.3 – 16.0 kΩ
		at hot	11.7 – 18.8 kΩ
Camshaft position sensor	Resistance	at cold	985 – 1,600 Ω
		at hot	1,265 – 1,890 Ω
Crankshaft position sensor	Resistance	at cold	985 – 1,600 Ω
		at hot	1,265 – 1,890 Ω

SS0NS–01

TORQUE SPECIFICATION

Part tightened	N·m	kgf·cm	ft·lbf
Spark plug x Cylinder head	18	180	13
Ignition coil x Cylinder head	8.5	85	75 in.·lbf
Camshaft position sensor x Cylinder head	8	80	69 in.·lbf
Crankshaft position sensor x Oil pump	8	80	69 in.·lbf

LUBRICATION

SERVICE DATA

SS0NU–01

Oil presuure		at idle speed	29 kPa (0.3 kgf/cm^2, 43 psi) or more
		at 3,000 rpm	245 – 490 kPa (2.5 – 5.0 kgf/cm^2, 36 – 71 psi)
Oil pump	Body clearance	STD	0.10 – 0.16 mm (0.0039 – 0.0063 in.)
		Maximum	0.20 mm (0.0079 in.)
	Tip clearance	STD	0.03 – 0.14 mm (0.0012 – 0.0055 in.)
		Maximum	0.20 mm (0.0079 in.)
	Side clearance	STD	2.91 – 2.97 mm (0.1145 – 0.1169 in.)
		Minimum	2.90 mm (0.1142 in.)

SS0NT–01

TORQUE SPECIFICATION

Part tightened	N·m	kgf·cm	ft·lbf
Clutch release cylinder x Transaxle case M/T only	12	120	9
Drain plug x Oil pan	25	250	18
Oil pump x Oil pump pulley	37	370	27
Oil pump x Cylinder block	7.5	75	65 in.·lbf
Pressure regulator valve x Cylinder block	30	300	22
Oil strainer x Cylinder block	10	100	7
Oil pan x Cylinder block	13	130	10
Oil pan x Oil pump	13	130	10
Front exhaust pipe x Exhaust manifold	62	630	46
Compressor mounting bracket x Cylinder block	27	270	20
A/C compressor x Compressor mounting bracket	25	250	18

MAINTENANCE

SS0O1–01

SERVICE DATA

Chassis	Ball joint Vertical play	Maximum	0 mm (0 in.)

SS0O2–01

TORQUE SPECIFICATION

Part tightened	N·m	kgf·cm	ft·lbf
Front seat x Body	37	375	27

MANUAL TRANSAXLE

SERVICE DATA

SS0KT–01

Input shaft roller bearing journal diameter	Min.	24.970 mm (0.9831 in.)
Input shaft 3rd gear journal diameter	Min.	30.970 mm (1.2193 in.)
Input shaft 4th gear journal diameter	Min.	28.970 mm (1.1405 in.)
Input shaft 5th gear journal diameter	Min.	24.870 mm (0.9791 in.)
Input shaft runout	Max.	0.05 mm (0.0020 in.)
Output shaft roller bearing journal diameter	Min.	32.970 mm (1.2980 in.)
Output shaft 1st gear journal diameter	Min.	37.970 mm (1.4949 in.)
Output shaft 2nd gear journal diameter	Min.	31.970 mm (1.2587 in.)
Output shaft runout	Max.	0.05 mm (0.0020 in.)
Gear thrust clearance 1st	STD Max.	0.10 – 0.40 mm (0.0039 – 0.0157 in.) 0.45 mm (0.0177 in.)
Gear thrust clearance 2nd	STD Max.	0.10 – 0.45 mm (0.0039 – 0.0177 in.) 0.50 mm (0.0197 in.)
Gear thrust clearance 3rd	STD Max.	0.10 – 0.35 mm (0.0039 – 0.0138 in.) 0.40 mm (0.0157 in.)
Gear thrust clearance 4th	STD Max.	0.10 – 0.55 mm (0.0039 – 0.0217 in.) 0.60 mm (0.0236 in.)
Gear thrust clearance 5th	STD Max.	0.10 – 0.57 mm (0.0039 – 0.0224 in.) 0.65 mm (0.0256 in.)
1st, 2nd, 3rd, 4th and 5th gear radial clearance	STD Max.	0.015 – 0.058 mm (0.0006 – 0.0023 in.) 0.070 mm (0.0028 in.)
Shift fork to hub sleeve clearance	Max.	1.0 mm (0.039 in.)
Synchronizer ring to gear clearance	Min.	0.6 mm (0.024 in.)
Drive in depth		
Input shaft front oil seal		15.8 ± 0.2 mm (0.622 ± 0.008 in.)
Speedometer driven gear oil seal		25 mm (0.98 in.)
Control shaft cover oil seal		1.0 – 2.0 mm (0.039 – 0.079 in.)
Select inner lever slotted spring pin		0 ± 0.5 mm (0 ± 0.020 in.)
No. 1 shift inner lever slotted spring pin		0 ± 0.5 mm (0 ± 0.020 in.)
No. 2 shift inner lever slotted spring pin		0 ± 0.5 mm (0 ± 0.020 in.)
Transmission case oil seal		2.4 ± 0.3 mm (0.094 ± 0.012 in.)
Transaxle case oil seal		1.9 ± 0.3 mm (0.075 ± 0.012 in.)
Differential side gear backlash		0.05 – 0.20 mm (0.0020–0.0079 in.)
Differential side gear thrust washer thickness		1.50 mm (0.0591 in.) 1.55 mm (0.0610 in.) 1.60 mm (0.0630 in.) 1.65 mm (0.0650 in.) 1.70 mm (0.0669 in.) 1.75 mm (0.0689 in.)
Differential side bearing preload (at starting) (For use with SST)		
	New bearing	0.8 – 1.6 N·m (8 – 16 kgf·cm, 6.9 – 13.9 in.·lbf)
	Reused bearing	0.5 – 1.0 N·m (5 – 10 kgf·cm, 4.3 – 8.7 in.·lbf)

Input shaft snap ring thickness		
No.2 clutch hub	Mark 0	2.30 mm (0.0906 in.)
	Mark 1	2.36 mm (0.0929 in.)
	Mark 2	2.42 mm (0.0953 in.)
	Mark 3	2.48 mm (0.0976 in.)
	Mark 4	2.54 mm (0.1000 in.)
	Mark 5	2.60 mm (0.1024 in.)
No.3 clutch hub	Mark A	2.25 mm (0.0886 in.)
	Mark B	2.31 mm (0.0909 in.)
	Mark C	2.37 mm (0.0933 in.)
	Mark D	2.43 mm (0.0957 in.)
	Mark E	2.49 mm (0.0980 in.)
	Mark F	2.55 mm (0.1004 in.)
	Mark G	2.61 mm (0.1028 in.)
Input shaft rear bearing	Mark A	2.29 mm (0.0902 in.)
	Mark B	2.35 mm (0.0925 in.)
	Mark C	2.41 mm (0.0949 in.)
	Mark D	2.47 mm (0.0972 in.)
	Mark E	2.53 mm (0.0996 in.)
	Mark F	2.59 mm (0.1020 in.)
Output shaft snap ring thickness		
No.1 clutch hub	Mark A	2.50 mm (0.0984 in.)
	Mark B	2.56 mm (0.1008 in.)
	Mark C	2.62 mm (0.1031 in.)
	Mark D	2.68 mm (0.1055 in.)
	Mark E	2.74 mm (0.1079 in.)
	Mark F	2.80 mm (0.1102 in.)
Differential side bearing adjusting shim thickness		
	Mark A	2.10 mm (0.0827 in.)
	Mark B	2.15 mm (0.0846 in.)
	Mark C	2.20 mm (0.0866 in.)
	Mark D	2.25 mm (0.0886 in.)
	Mark E	2.30 mm (0.0906 in.)
	Mark F	2.35 mm (0.0925 in.)
	Mark G	2.40 mm (0.0945 in.)
	Mark H	2.45 mm (0.0965 in.)
	Mark J	2.50 mm (0.0984 in.)
	Mark K	2.55 mm (0.1004 in.)
	Mark L	2.60 mm (0.1024 in.)
	Mark M	2.65 mm (0.1043 in.)
	Mark N	2.70 mm (0.1063 in.)
	Mark P	2.75 mm (0.1083 in.)
	Mark Q	2.80 mm (0.1102 in.)
	Mark R	2.85 mm (0.1122 in.)
	Mark S	2.90 mm (0.1142 in.)
	Mark T	2.95 mm (0.1161 in.)
	Mark U	3.00 mm (0.1181 in.)

SS0KU–06

TORQUE SPECIFICATION

Part tightened		N·m	kgf·cm	ft·lbf
Transaxle x Engine (See page MX–2)	17 mm head	64	650	47
	14 mm head A:	46	470	34
	14 mm head B:	24	240	17
	10 mm head	7.4	75	65 in.·lbf
Starter x Transaxle		39	400	29
Clutch release cylinder x Transaxle		12	120	9
Clutch line bracket x Transaxle		4.9	50	43 in.·lbf
Front wheel		103	1,050	76
Front exhaust pipe clamp set bolt		32	325	24
Front exhaust pipe x Exhaust manifold		62	630	46
Front exhaust pipe x Exhaust tail pipe		19	195	14
Stabilizer bar bracket x Body		19	195	14
Engine rear mounting insulator x Bracket		64	650	47
Engine rear mounting insulator x Body		90	920	67
Steering member brace		78	800	58
Intake manifold stay		20	200	14
Engine left mounting bracket x Insulator		48	490	35
No.1 grommet retainer x Body		4.4	45	39 in.·lbf
No.2 grommet retainer x Body		4.9	50	43 in.·lbf
Shift lever assembly x Body		12	120	9
Output shaft front bearing lock plate set bolt		11	115	8
Transmission case x Transaxle case		29	300	22
Reverse shift arm bracket		17	175	13
Straight screw plug (Reverse restrict pin)		13	130	9
Straight screw plug (Shift fork shaft)		25	250	18
Straight screw plug (Lock ball assembly)		39	400	29
Reverse idler gear shaft lock bolt		29	300	22
Rear bearing retainer		27	280	20
Output shaft lock nut		118	1,200	87
Shift fork and shift head x Shift fork shaft		16	160	12
Shift and select lever assembly		20	200	14
Transmission case x Transmission case cover		18	185	13
Back–up light switch		40	410	30
Filler and drain plugs		39	400	29
Ring gear x Differential case		124	1,260	91
Speedometer driven gear		11	115	8
Clutch release fork support		37	375	27
Control lever housing support bracket x Transmission case		11	115	8
Selecting bellcrank assembly x Transmission case		25	250	18
Shift and select lever shaft assembly lock bolt		29	300	22
Transaxle case receiver x Transaxle case		11	115	8
Oil receiver pipe		17	175	13

SUSPENSION AND AXLE

SS0LO–05

SERVICE DATA

Cold tire inflation pressure	Tire size P185/60R14 82H	Front Rear	180 kPa (1.8 kgf/cm^2, 26 psi) 180 kPa (1.8 kgf/cm^2, 26 psi)
Front wheel alignment	Vehicle height	Front*1 Rear*2	188 mm (7.40 in.) 249 mm (9.80 in.)
	Camber	 Left–right error	–0°25' ± 45' (–0.42° ± 0.75°) 45' (0.75°) or less
	Caster	 Left–right error	1°30' ± 45' (1.5° ± 0.75°) 45' (0.75°) or less
	Steering axis inclination	 Left–right error	12°15' ± 45' (12.25° ± 0.75°) 45' (0.75°) or less
	Toe–in (total)	 Rack end length difference	0°06' ± 12' (0.1° ± 0.2°) 1 ± 2 mm (0.04 ± 0.08 in.) 1.5 mm (0.059 in.) or less
	Wheel angle	 Inside wheel Reference : Outside wheel	 35°45' ± 2° (35.75° ± 2°) 32°05' (32.08°)
Rear wheel alignment	Camber	 Left–right error	–0°30' ± 45' (–0.5° ± 0.75°) 45' (0.75°) or less
	Toe–in (total)		0°20' ± 20' (0.33° ± 0.33°) 3.4 ± 3.4 mm (0.13 ± 0.13 in.)
Front axle	Axle bearing backlash	Maximum	0.05 mm (0.0020 in.)
	Axle hub deviation	Maximum	0.05 mm (0.0020 in.)
Front drive shaft	Drive shaft standard length	RH LH	784.4 ± 5.0 mm (30.882 ± 0.197 in.) 554.1 ± 5.0 mm (21.815 ± 0.197 in.)
Front suspension	Lower ball joint turning torque		0.8 – 2.5 N·m (8 – 25 kgf·cm, 7.0 – 22.0 in.·lbf)
Rear axle	Bearing preload (turning)	Friction force plus	0 – 11.8 N (0 – 1.2 kgf, 0 – 2.6 lbf)
	Axle hub axial play		0.05 mm (0.0020 in.) or less

*1: Measure the distance from the ground to the center of the lower suspension arm front mounting bolt.
*2: Measure the distance from the ground to the center of the axle beam mounting bolt.

SS0LP–04

TORQUE SPECIFICATION

Part tightened	N·m	kgf·cm	ft·lbf
FRONT:			
Hub nut	103	1,050	76
Tie rod end lock nut	47	480	35
Steering knuckle x Shock absorber	153	1,570	113
Steering knuckle x Brake caliper	88	900	65
Steering knuckle x Tie rod end	49	500	36
Axle hub x Drive shaft	216	2,200	159
Lower ball joint x Lower suspension arm	80	820	59
Lower ball joint x Steering knuckle	98	1,000	72
Steering knuckle x Disc brake dust cover	8.3	85	74 in.·lbf
Suspension support x Body	39	400	29
Suspension support x Piston rod	47	475	34
ABS speed sensor set bolt	8.0	82	71 in.·lbf
ABS speed sensor wire harness clamp x Shock absorber	5.0	55	48 in.·lbf
Flexible hose x Shock absorber bracket	30	300	22
Lower suspension arm front side set bolt	142	1,450	105
Lower suspension arm rear side set bolt	74	750	55
Stabilizer bar bracket set bolt	19	195	14
Stabilizer bar bolt x Lower suspension arm	18	180	13
Stabilizer bar bolt x Stabilizer bar	18	180	13
REAR:			
Hub nut	103	1,050	76
Shock absorber x Axle beam	68	690	50
Suspension support x Body	39	400	29
Suspension support x Piston rod	34	350	25
ABS speed sensor set bolt	8.0	80	69 in.·lbf
ABS speed sensor wire harness x Axle beam	5.0	55	48 in.·lbf
Parking brake cable x Backing plate	8.0	82	71 in.·lbf
Brake line x Wheel cylinder	15	155	11
Backing plate x Axle beam	70	710	51
Lateral control rod x Body	113	1,150	83
Lateral control rod x Axle beam	83	850	61
Axle beam x Body	142	1,450	105

SFI

SS0NX–02

SERVICE DATA

Fuel pressure regulator	Fuel pressure		301 – 347 kPa (3.1 – 3.5 kgf/cm^2, 44 – 50 psi)
Fuel pump	Resistance	at 20˚C (68˚F)	0.2 – 3.0 Ω
Injector	Resistance	at 20˚C (68˚F)	13.4 – 14.2 Ω
	Injection volume		39 – 49 cm^3 (2.4 – 3.0 cu in.) per 15 sec.
	Difference between each cylinder		5 cm^3 (0.31 cu in.) or less
	Fuel leakage		1 drop or less per 3 minutes
Throttle body	Throttle body fully closed angle		6˚
Throttle position sensor	Resistance		
	Throttle valve fully closed	VTA – E2	0.2 – 5.7 kΩ
	Throttle valve fully opened	VTA – E2	2.0 – 10.2 kΩ
	–	VC – E2	2.5 – 5.9 kΩ
IAC valve	Resistance	+B – RSO (or RSC)	
		Cold (–10˚C (14˚F) to 50˚C (122˚F))	17.0 – 24.5 Ω
		Hot (50˚C (122˚F) to 100˚C (212˚F))	21.5 – 28.5 Ω
VSV for EVAP	Resistance	at 20˚C (68˚F)	30 – 34 Ω
VSV for vapor pressure sensor	Resistance	at 20˚C (68˚F)	33 – 39 Ω
ECT sensor and IAT sensor	Resistance	at –20˚C (–4˚F)	10 – 20 kΩ
		at 0˚C (32˚F)	4 – 7 kΩ
		at 20˚C (68˚F)	2 – 3 kΩ
		at 40˚C (104˚F)	0.9 – 1.3 kΩ
		at 60˚C (140˚F)	0.4 – 0.7 kΩ
		at 80˚C (176˚F)	0.2 – 0.4 kΩ
MAP sensor	Power source voltage		4.5 – 5.5 V
Heated oxygen sensor	Heater coil resistance	at 20˚C (68˚F)	11 – 16 Ω
Fuel cut rpm	Fuel return rpm		900 rpm

SS0NY–02

TORQUE SPECIFICATION

Part tightened	N·m	kgf·cm	ft·lbf
Fuel line (Union bolt type)	29.5	300	22
(Flare nut type)	30	300	23
Fuel suction tube x Fuel tank	3.4	35	30 in.·lbf
Delivery pipe x Cylinder head	19	190	14
Fuel inlet hose x Delivery pipe	30	300	23
Fuel pump bracket x Fuel cut–off valve	1.5	15	13 in.·lbf
Fuel tank x Fuel tank filler pipe	3.4	35	30 in.·lbf
Fuel tank x Body	33	340	25
Throttle body x Intake manifold	19.5	195	14
Knock sensor x Cylinder block	45	450	33
Oxygen sensor x Exhaust manifold	44	440	32
Heated oxygen sensor x Exhaust pipe	44	440	32

STEERING

SERVICE DATA

SS0MY–13

DRIVE BELT		
Drive belt tension	New belt	140 – 180 lbf
Drive belt tension	Used belt	80 – 120 lbf
POWER STEERING FLUID		
Fluid level rise	Maximum	5 mm (0.20 in.)
Fluid pressure at idle speed with valve closed	Minimum	6,374 kPa (65 kgf/cm^2, 925 psi)
STEERING WHEEL		
Steering wheel freeplay	Maximum	30 mm (1.18 in.)
Steering effort at idle speed	Maximum	7.8 N·m (80 kgf·cm, 69 in.lbf)
POWER STEERING VANE PUMP		
Vane pump rotating torque		0.2 N·m (2.5 kgf·cm, 2.2 in.·lbf) or less
Rotor shaft x Bushing oil clearance	STD	0.03 – 0.05 mm (0.0012 – 0.0020 in.)
Rotor shaft x Bushing oil clearance	Maximum	0.07 mm (0.0028 in.)
Vane plate height	Minimum	8.6 mm (0.339 in.)
Vane plate thickness	Minimum	1.397 mm (0.05500 in.)
Vane plate length	Minimum	14.991 mm (0.59020 in.)
Vane plate x Rotor groove clearance	Maximum	0.035 mm (0.00138 in.)
Vane plate length	Pump rotor and cam ring mark	
	None	14.999 – 15.001 mm (0.59051 – 0.59059 in.)
	1	14.997 – 14.999 mm (0.59043 – 0.59051 in.)
	2	14.995 – 14.997 mm (0.59035 – 0.59043 in.)
	3	14.993 – 14.995 mm (0.59027 – 0.59035 in.)
	4	14.991 – 14.993 mm (0.59020 – 0.59027 in.)
Spring free length	Minimum	33 mm (1.30 in.)
POWER STEERING GEAR		
Steering rack runout	Maximum	0.30 mm (0.0118 in.)
Control valve x Rack housing busing oil clearance	STD	0.050 – 0.083 mm (0.00197 – 0.00327 in.)
Control valve x Rack housing busing oil clearance	Maximum	0.125 mm (0.00492 in.)
Total preload	Turning	0.8 – 1.4 N·m (8 – 14 kgf·cm, 6.9 – 12.2 in.·lbf)

SS0MZ–05

TORQUE SPECIFICATION

Part tightened		N·m	kgf·cm	ft·lbf
STEERING COLUMN				
Steering support x Column tubu		5.4	55	48 in.·lbf
Control valve shaft x Sliding yoke		28	290	21
Steering main shaft x Sliding yoke		28	290	21
Steering column assembly set nut		25	260	19
Steering wheel set nut		34	350	25
Steering wheel pad set screw (Torx screw)		8.8	90	78 in.·lbf
PS VANE PUMP				
Rear housing x Front housing		24	240	17
Pressure port union x Front housing		83	850	61
Union bolt x Pressure port union		69	700	51
Oil reservior set bolt	Front side	13	130	9
	Rear side	24	240	17
Protector set bolt		5.5	55	48 in.·lbf
Vane pump pulley set nut		43	440	32
PS vane pump assembly set bolt		43	440	32
PS vane pump assembly set nut		39	210	15
Union bolt x PS vane pump assembly		54	550	40
Cruise control actuator assembly set bolt		6	52	45 in.·lbf
PS GEAR				
Cylinder end stopper		59	600	43
Self–locking nut		59	600	43
Rack housing cap		59	600	43
Rack guide spring cap lock nut		36 (44)	366 (450)	26 (33)
Rack x Rack end		51 (59)	520 (600)	38 (43)
Tie rod end lock nut		47	480	35
Tum pressure tube union nut		20 (25)	203 (250)	15 (18)
Air control valve		29	300	22
PS gear bracket x Body		58	590	43
Engine rear mount insulator	Bolt A	90	920	67
	Bolt B	78	800	58
	Bolt C	64	650	47
Engine rear mount bracket x Transaxle		48	490	35
Column hole cover x Body		4.9	50	43 in.·lbf
Control valve shaft x Sliding yoke		25	260	19
Steering main shaft x Sliding yoke		25	260	19
Pressure feed and return tubes x Control valve housing		36 (44)	365 (450)	26 (33)
Tube clamp set bolt		5.4	55	48 in.·lbf

( ): For use without SST

STARTING

SERVICE DATA

SS0MY–12

Starter (Planetary type)	Rated voltage and output power		12 V 0.8 kW
	No–load characteristics	Current	90 A or less at 11.5 V
		rpm	3,000 rpm or more
	Center bearing oil clearance	STD	0.01 – 0.06 mm (0.0004 – 0.0024 in.)
		Maximum	0.2 mm (0.0078 in.)
	Brush length	STD	14.0 mm (0.551 in.)
		Minimum	0.9 mm (0.0354 in.)
	Spring installed load	STD	13.7 – 17.6 N (1.4 – 1.8 kgf, 3.1 – 4.0 lgf)
		Minimum	8.8 N (0.9 kgf, 2.0 lbf)
	Commutator		
	Diameter	STD	28.0 mm (1.102 in.)
		Minimum	27.0 mm (1.063 in.)
	Undercut depth	STD	0.6 mm (0.024 in.)
		Minimum	0.2 mm (0.008 in.)
	Circle runout	Maximum	0.05 mm (0.0020 in.)
Starter (Reduction type)	Rated voltage and output power		12 V 1.0 kW
	No–load characteristics	Current	90 A or less at 11.5 V
		rpm	3,000 rpm or more
	Brush length	STD	13.5 mm (0.531 in.)
		Minimum	8.5 mm (0.335 in.)
	Spring installed load	STD	17.6 – 23.5 N (1.79 – 2.41 kgf, 3.9 – 5.3 lbf)
		Minimum	11.8 N (1.2 kgf, 2.6 lbf)
	Commutator		
	Diameter	STD	30.0mm (1.181 in.)
		Minimum	29.0 mm (1.142 in.)
	Undercut depth	STD	0.6 mm (0.024 in.)
		Minimum	0.2 mm (0.008 in.)
	Circle runout	Maximum	0.05 mm (0.0020 in.)
	Magnetic switch		
	Contact plate for wear	Maximum	0.9 mm (0.035 in.)

SS0MZ–04

TORQUE SPECIFICATION

Part tightened		N·m	kgf·cm	ft·lbf
End cover x Brush holder		1.5	15	13 in.·lbf
End cover x Starter housing	Planetary type	5.9	60	52 in.·lbf
	Reduction type	9.3	95	82 in.·lbf
Magnetic switch x Starter housing	Planetary type	8.3	85	73 in.·lbf
	Reduction type	9.3	95	82 in.·lbf
Lead wire of field frame x Magnetic switch	Planetary type	9.8	100	87 in.·lbf
	Reduction type	5.9	60	52 in.·lbf
Intake manifold, cylinder block x Intake manifold stay		17.5	175	13
Starter wire x Terminal 30 of starter		8.8	90	78 in.·lbf
Starter x Transaxle		37	370	27
Terminal nut x Terminal C of starter, Terminal 30 of starter		17	173	12
Magnetic switch end cover x Magnetic switch		3.6	37	32 in.·lbf

STANDARD BOLT

HOW TO DETERMINE BOLT STRENGTH

SS00F–01

	Mark	Class		Mark	Class
Hexagon head bolt	 Bolt head No. 4– 5– 6– 7– 8– 9– 10– 11–	4T 5T 6T 7T 8T 9T 10T 11T	Hexagon flange bolt w/ washer hexagon bolt	 4 Protruding lines	9T
	 No mark	4T	Hexagon flange bolt w/ washer hexagon bolt	 5 Protruding lines	10T
Hexagon flange bolt w/ washer hexagon bolt	 No mark	4T	Hexagon flange bolt w/ washer hexagon bolt	 6 Protruding lines	11T
Hexagon head bolt	 2 Protruding lines	5T	Stud bolt	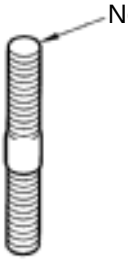 No mark	4T
Hexagon flange bolt w/ washer hexagon bolt	 2 Protruding lines	6T		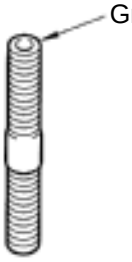 Grooved	6T
Hexagon head bolt	 3 Protruding lines	7T	Welded bolt	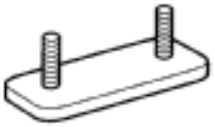	4T
Hexagon head bolt	 4 Protruding lines	8T			

V06821

SS00G–01

SPECIFIED TORQUE FOR STANDARD BOLTS

Class	Diameter mm	Pitch mm	Specified torque							
			Hexagon head bolt				Hexagon flange bolt			
			N·m	kgf·cm	ft·lbf		N·m	kgf·cm	ft·lbf	
4T	6	1	5	55	48	in.·lbf	6	60	52	in.·lbf
	8	1.25	12.5	130	9		14	145	10	
	10	1.25	26	260	19		29	290	21	
	12	1.25	47	480	35		53	540	39	
	14	1.5	74	760	55		84	850	61	
	16	1.5	115	1,150	83		–	–	–	
5T	6	1	6.5	65	56	in.·lbf	7.5	75	65	in.·lbf
	8	1.25	15.5	160	12		17.5	175	13	
	10	1.25	32	330	24		36	360	26	
	12	1.25	59	600	43		65	670	48	
	14	1.5	91	930	67		100	1,050	76	
	16	1.5	140	1,400	101		–	–	–	
6T	6	1	8	80	69	in.·lbf	9	90	78	in.·lbf
	8	1.25	19	195	14		21	210	15	
	10	1.25	39	400	29		44	440	32	
	12	1.25	71	730	53		80	810	59	
	14	1.5	110	1,100	80		125	1,250	90	
	16	1.5	170	1,750	127		–	–	–	
7T	6	1	10.5	110	8		12	120	9	
	8	1.25	25	260	19		28	290	21	
	10	1.25	52	530	38		58	590	43	
	12	1.25	95	970	70		105	1,050	76	
	14	1.5	145	1,500	108		165	1,700	123	
	16	1.5	230	2,300	166		–	–	–	
8T	8	1.25	29	300	22		33	330	24	
	10	1.25	61	620	45		68	690	50	
	12	1.25	110	1,100	80		120	1,250	90	
9T	8	1.25	34	340	25		37	380	27	
	10	1.25	70	710	51		78	790	57	
	12	1.25	125	1,300	94		140	1,450	105	
10T	8	1.25	38	390	28		42	430	31	
	10	1.25	78	800	58		88	890	64	
	12	1.25	140	1,450	105		155	1,600	116	
11T	8	1.25	42	430	31		47	480	35	
	10	1.25	87	890	64		97	990	72	
	12	1.25	155	1,600	116		175	1,800	130	

V00079

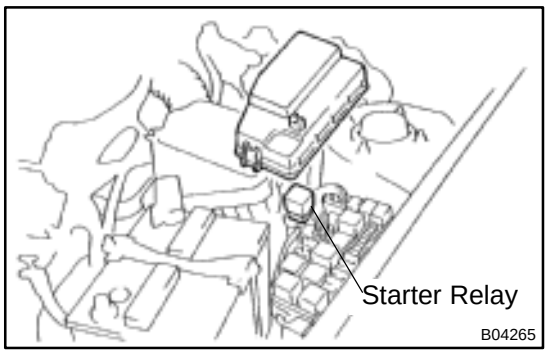

STARTER RELAY

ST088–01

INSPECTION

1. REMOVE RELAY BOX COVER

2. REMOVE STARTER RELAY (Marking: ”ST”)

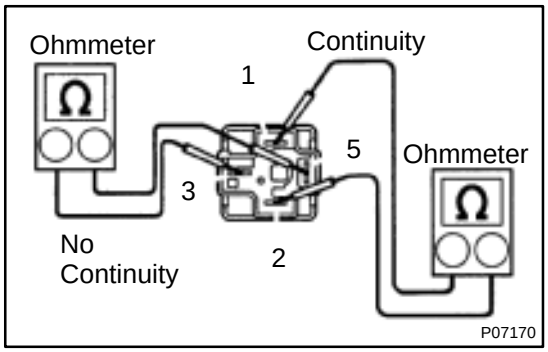

3. INSPECT RELAY CONTINUITY

(a) Using an ohmmeter, check that there is continuity between terminals 1 and 2.

If there is no continuity, replace the relay.

(b) Check that there is no continuity between terminals 3 and 5.

If there is continuity, replace the relay.

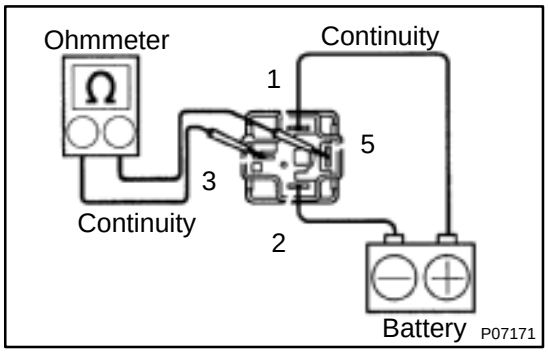

4. INSPECT RELAY OPERATION

(a) Apply battery voltage across terminals 1 and 2.

(b) Using an ohmmeter, check that there is continuity between terminals 3 and 5.

If there is no continuity, replace the relay.

5. REINSTALL STARTER RELAY

6. REINSTALL RELAY BOX COVER

STARTER (Planetary Type)

COMPONENTS

ST080–03

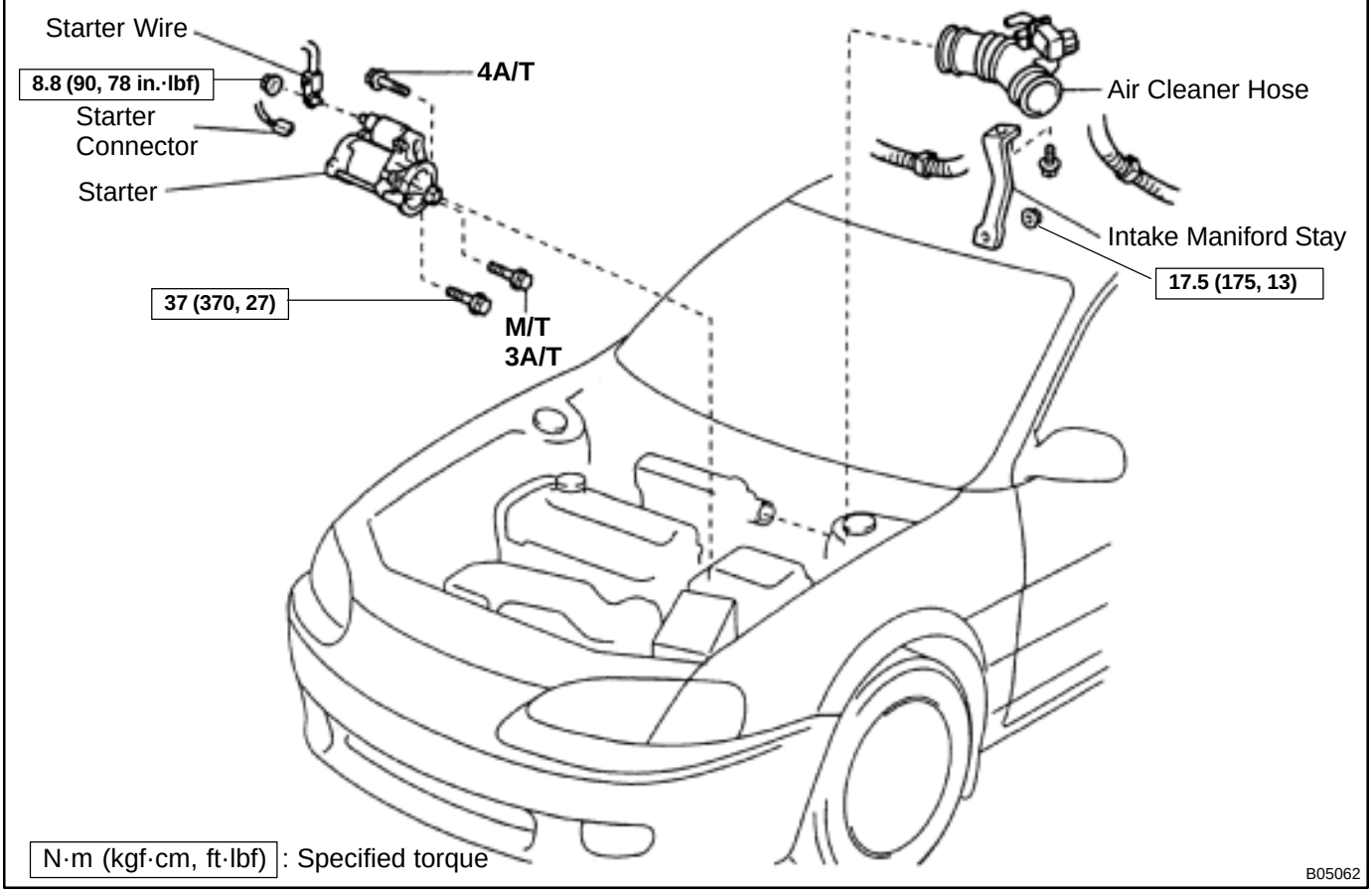

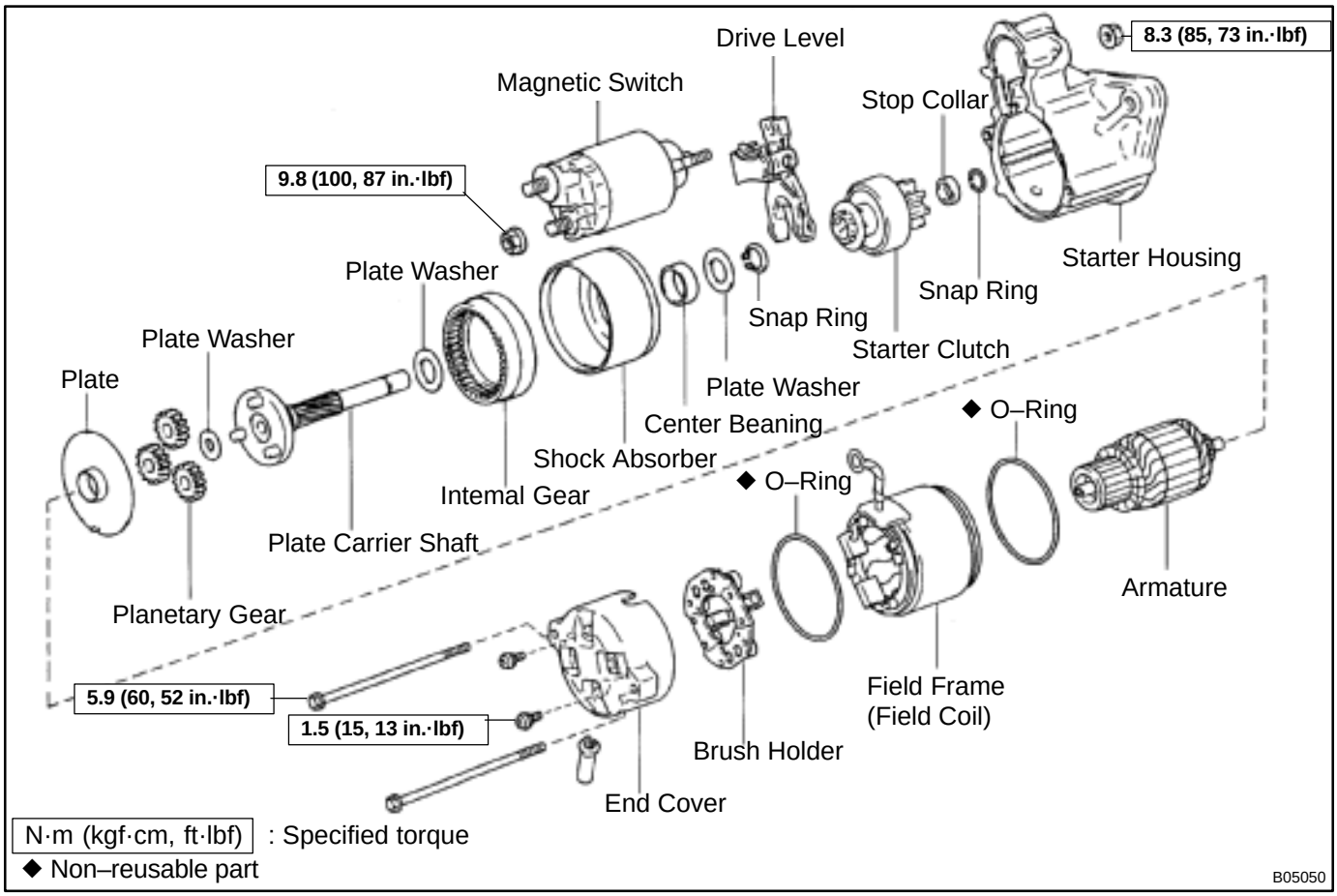
Drive Level
8.3 (85, 73 in.·lbf)
Magnetic Switch
Stop Collar
9.8 (100, 87 in.·lbf)
Starter Housing
Plate Washer
Snap Ring
Snap Ring
Plate Washer
Starter Clutch
Plate
Center Beaning
◆ O–Ring
Shock Absorber
◆ O–Ring
Intemal Gear
Plate Carrier Shaft
Armature
Planetary Gear
5.9 (60, 52 in.·lbf)
Field Frame
(Field Coil)
1.5 (15, 13 in.·lbf)
Brush Holder
End Cover
N·m (kgf·cm, ft·lbf) : Specified torque
◆ Non–reusable part
B05050

ST082–06

DISASSEMBLY

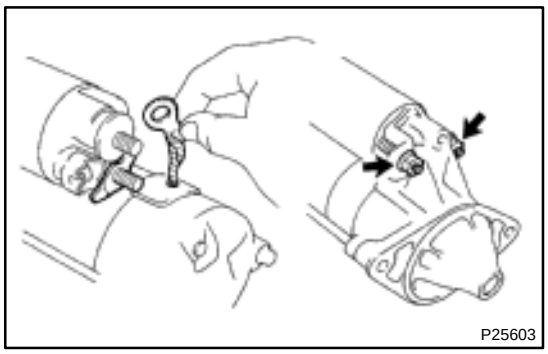

1. REMOVE MAGNETIC SWITCH

(a) Remove the nut, and disconnect the lead wire from the magnetic switch terminal.

(b) Loosen the 2 nuts holding the magnetic switch to the starter housing.

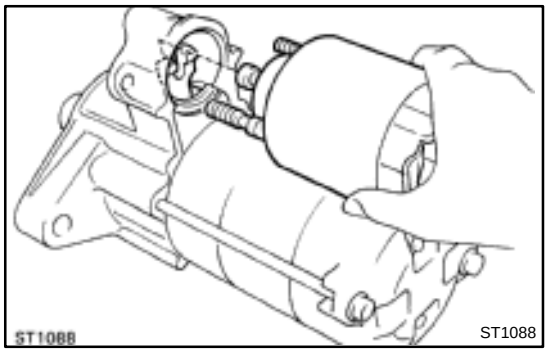

(c) Pull the magnetic switch and while lifting the front part of the magnetic switch, release the plunger hook from the drive lever, then release the magnetic switch.

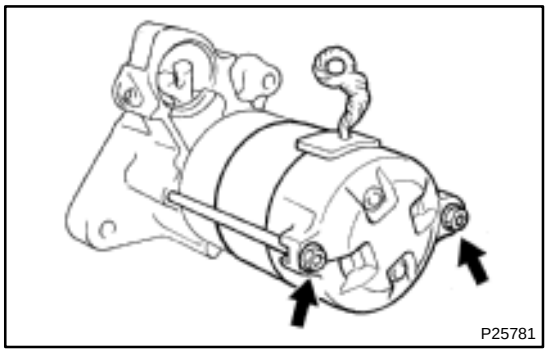

2. REMOVE FIELD FRAME AND ARMATURE

(a) Remove the 2 through bolts.

(b) Pull out the field frame together with the armature.

(c) Remove the O–ring from the field frame.

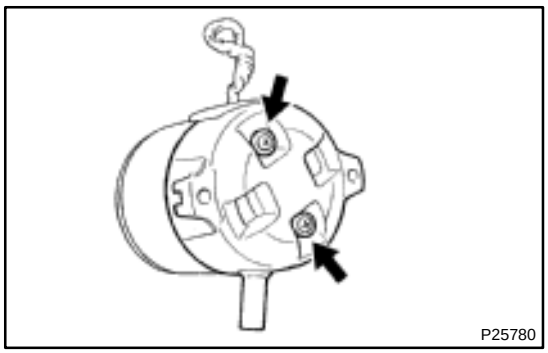

3. REMOVE BRUSH HOLDER

(a) Remove the 2 screws and end cover from the field frame.

(b) Remove the O–ring from the field frame.

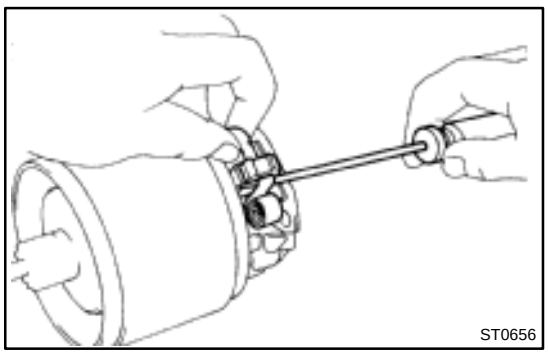

(c) Using a screwdriver, hold the spring back and disconnect the brush holder. Disconnect the 4 brushes, and remove the brush holder.

4. REMOVE ARMATURE FROM FIELD FRAME

5. REMOVE DRIVE LEVER AND STARTER CLUTCH WITH SHOCK ABSORBER FROM STARTER HOUSING

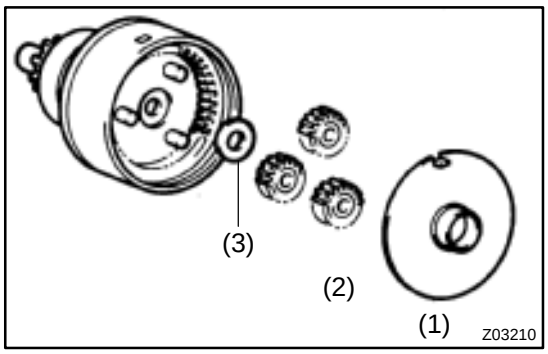

6. REMOVE PLANETARY GEARS

Remove these parts from the shock absorber:

(1) Plate
(2) 3 planetary gears
(3) Plate washer

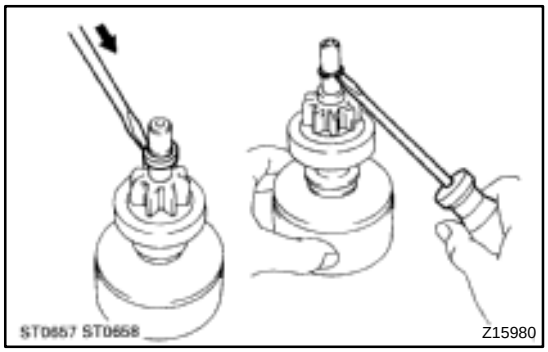

7. REMOVE STARTER CLUTCH

(a) Using a screwdriver, tap in the stop collar towards the starter clutch.
(b) Using a screwdriver, pry off the snap ring.
(c) Remove the stop collar from the starter clutch.

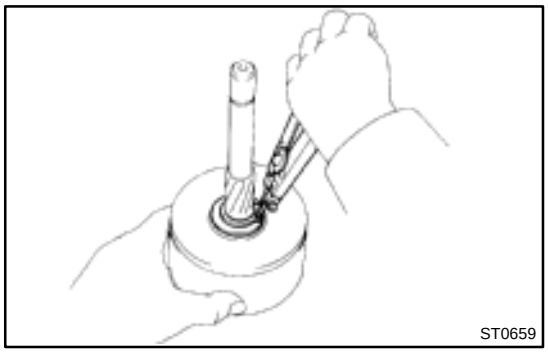

8. REMOVE PLANET CARRIER SHAFT AND INTERNAL GEAR

(a) Using snap ring pliers, remove the snap ring and plate washer.
(b) Remove the planet carrier shaft and plate washer.

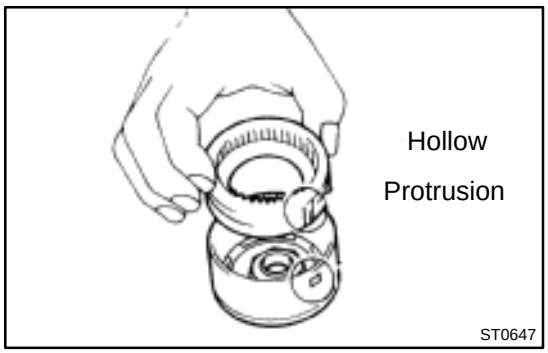

(c) Align the hollow of the internal gear with the protrusion inside the shock absorber, and remove the internal gear.

ST083–01

INSPECTION

1. INSPECT ARMATURE COIL

(a) Check the commutator for open circuit.
Using an ohmmeter, check that there is continuity between the segments of the commutator.

If there is no continuity between any segment, replace the armature.

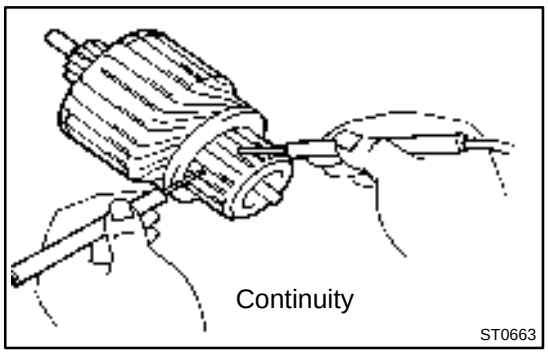

(b) Check the commutator for ground.
Using an ohmmeter, check that there is no continuity between the commutator and armature coil core.

If there is continuity, replace the armature.

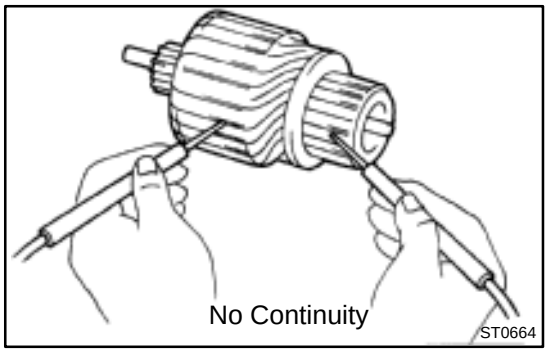

(c) Check for the commutator circle runout.
(1) Place the commutator on V–blocks.
(2) Using a dial gauge, measure the circle runout.
Maximum circle runout: 0.05 mm (0.0020 in.)

If the circle runout is greater than maximum, correct it on a lathe.

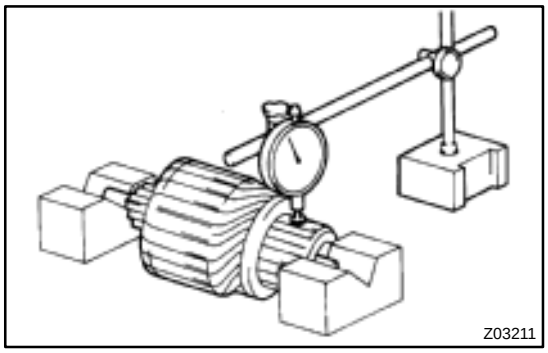

(d) Using vernier calipers, measure the commutator diameter.
Standard diameter: 28.0 mm (1.102 in.)
Minimum diameter: 27.0 mm (1.063 in.)

If the diameter is less than minimum, replace the armature.

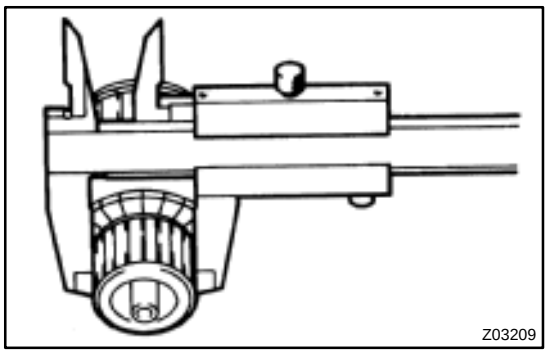

(e) Check that the undercut depth is clean and free of foreign materials. Smooth out the edge.
Standard undercut depth: 0.6 mm (0.024 in.)
Minimum undercut depth: 0.2 mm (0.008 in.)

If the undercut depth is less than minimum, correct it with a hacksaw blade.

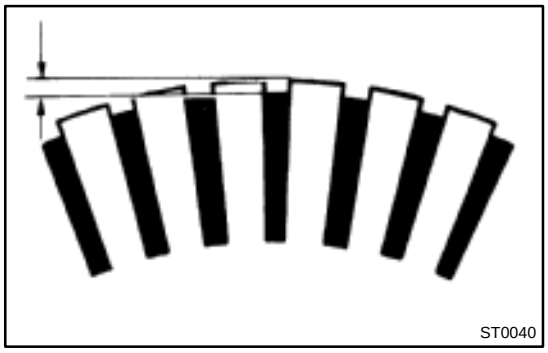

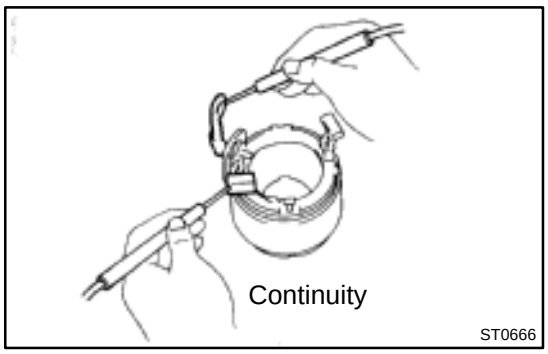

2. INSPECT FIELD COIL

(a) Check the field coil for open circuit.
Using an ohmmeter, check that there is continuity between the lead wire and field coil brush lead.

If there is no continuity, replace the field frame.

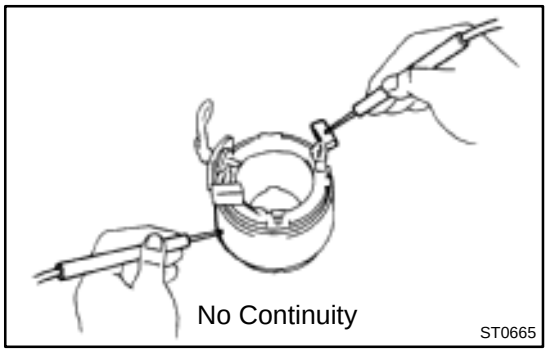

(b) Check the field coil for ground.
Using an ohmmeter, check that there is no continuity between the field coil end and field frame.

If there is continuity, repair or replace the field frame.

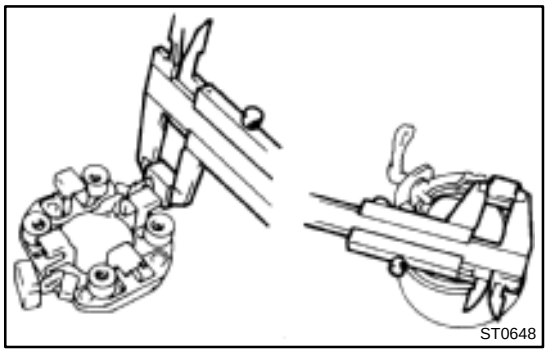

3. INSPECT BRUSHES

Using vernier calipers, measure the brush length.

Standard length:
14.0 mm (0.551 in.)
Minimum length:
9.0 mm (0.354 in.)

If the length is less than minimum, replace the brush (field frame side) or brush holder, and dress with an emery cloth.

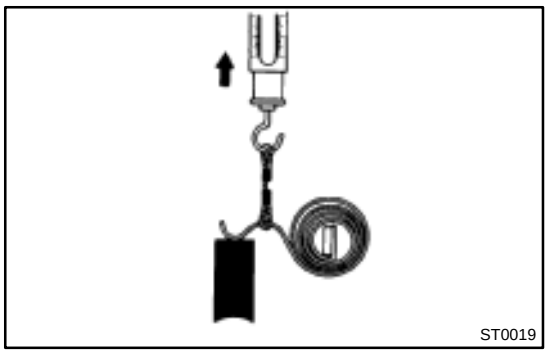

4. INSPECT BRUSH SPRINGS

Check the brush spring load.
Take the pull scale reading the instant the brush spring separates from the brush.

Spring installed load:
13.7 – 17.6 N (1.4 – 1.8 kgf, 3.1 – 4.0 lbf)
Minimum spring installed load:
8.8 N (0.9 kgf, 2.0 lbf)

If the installed load is not as specified, replace the brush springs.

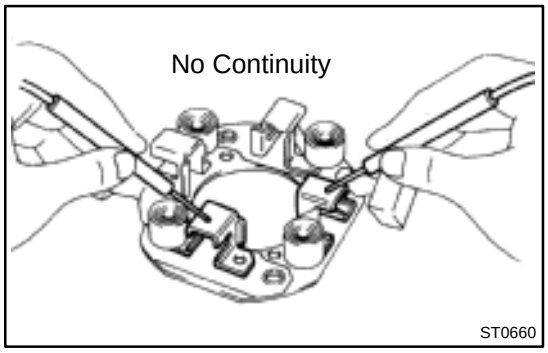

5. INSPECT BRUSH HOLDER

Check the brush holder insulation.
Using an ohmmeter, check that there is no continuity between the positive (+) and negative (–) brush holders.

If there is continuity, repair or replace the brush holder.

6. INSPECT CLUTCH AND GEAR

(a) Check the gear teeth on the planetary gear, internal gear and starter clutch for wear or damage.

If the gear is damaged, replace it.

If the starter clutch teeth are damaged, replace the starter clutch and also inspect the flywheel ring gear for wear or damage.

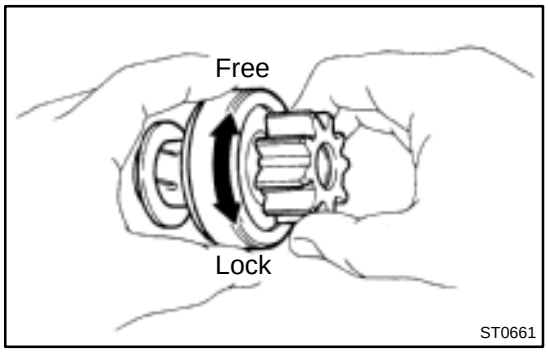

(b) Check the starter clutch.
Rotate the clutch pinion gear clockwise and check that it turns freely. Try to rotate the clutch pinion gear counterclockwise and check that it locks.

If necessary, replace the starter clutch.

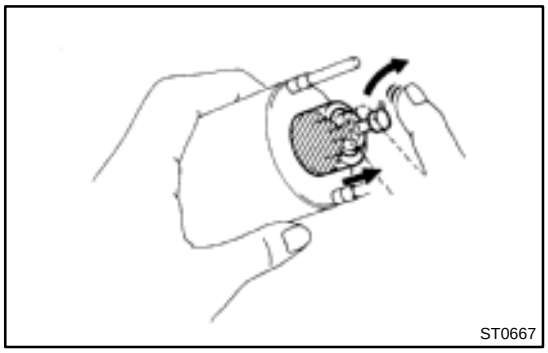

7. INSPECT MAGNETIC SWITCH

(a) Check the plunger.
Push in the plunger and replace it. Check that it returns quickly to its original position.

If necessary, replace the magnetic switch.

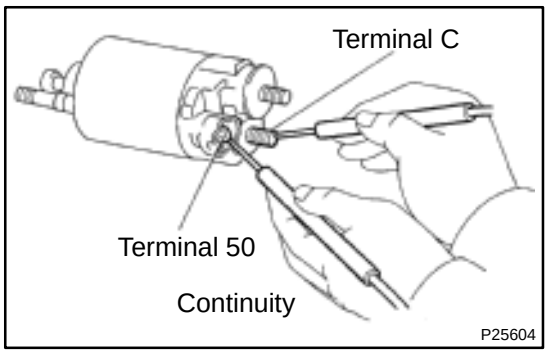

(b) Check the pull–in coil for open circuit.
Using an ohmmeter, check that there is continuity between terminals 50 and C.

If there is no continuity, replace the magnetic switch.

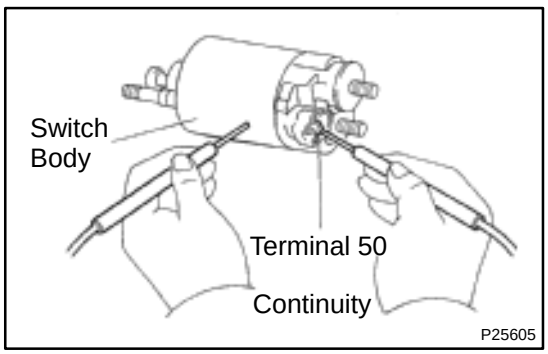

(c) Check the hold–in coil for open circuit.
Using an ohmmeter, check that there is continuity between terminal 50 and the switch body.

If there is no continuity, replace the magnetic switch.

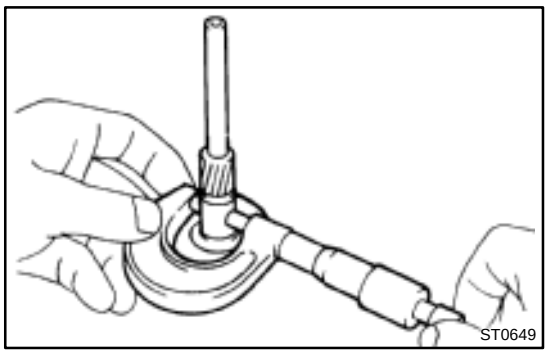

8. INSPECT BEARINGS

(a) Check the planet carrirer shaft.

Using a micrometer, measure the outer diameter of the surface in contact with the center bearing of the planet carrier shaft.

Standard shaft diameter:
14.980 – 15.000 mm (0.5898 – 0.5906 in.)

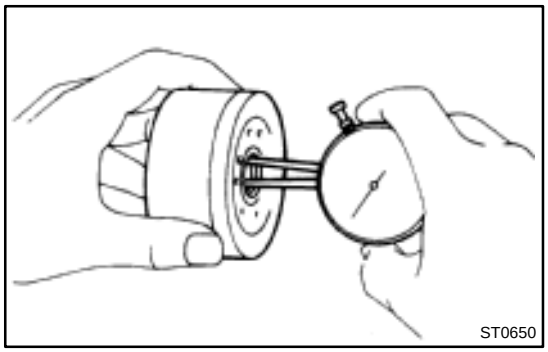

(b) Check the center bearing.

(1) Using a caliper gauge, measure the inside diameter of the center bearing.

Center bearing inside diameter:
15.008 – 15.050 mm (0.5908 – 0.5925 in.)

(2) Subtract the planet carrier shaft diameter from the bearing inside diameter measurement.

Standard center bearing oil clearance:
0.01 – 0.06 mm (0.0004 – 0.0024 in.)

Maximum center bearing oil clearance:
0.2 mm (0.0078 in.)

If the clearance is greater than maximum, replace the planet carrier shaft and center bearing.

ST087–03

INSTALLATION

Installation is in the reverse order of removal (See page ST–18).

ST085–01

REASSEMBLY

HINT:

Use high temperature–resistant grease to lubricate the bearings and sliding parts when assembling the starter.

1. INSTALL INTERNAL GEAR AND PLANET CARRIER SHAFT

(a) Apply grease to the internal gear touching the shock absorber and planetary gears.

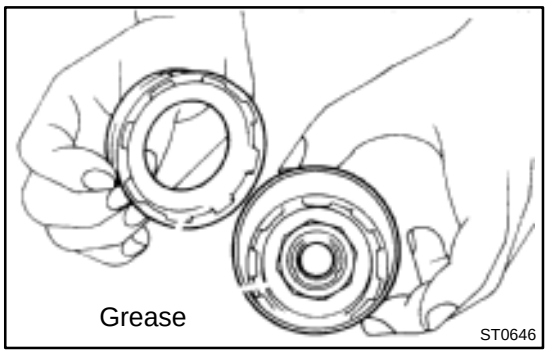

(b) Align the hollow of the internal gear with the protrusion inside the shock absorber.

(c) Insert and turn the internal gear so that it interlocks with the shock absorber.

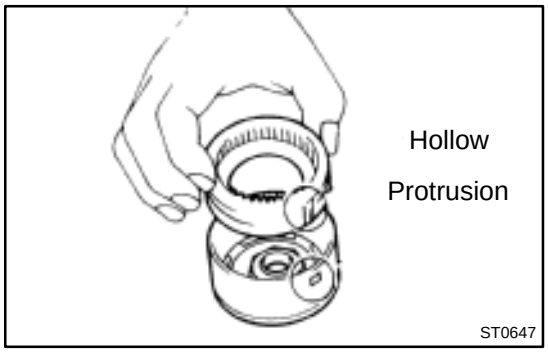

(d) Apply turbine oil to the center bearing.

(e) Apply grease to the plate washer, and install it to the planet carrier shaft.

(f) Install the planet carrier shaft to the shock absorber.

(g) Using snap ring pliers, install the plate washer and snap ring.

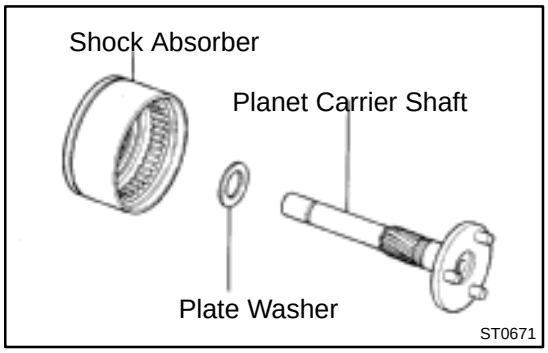

2. INSTALL STARTER CLUTCH

(a) Apply grease to the bushing and spline of the starter clutch stop collar.

(b) Place the starter clutch and stop collar on the planet carrier shaft.

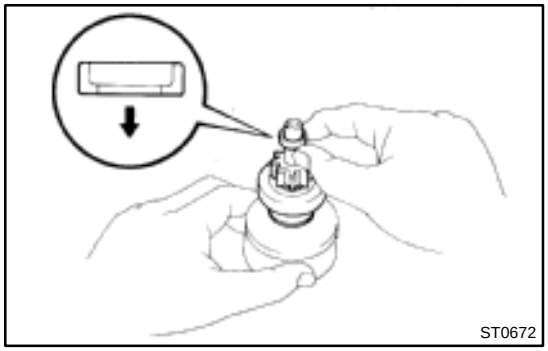

(c) Apply grease to the snap ring, and install it to the planet carrier shaft groove.

(d) Using a vise, compress the snap ring.

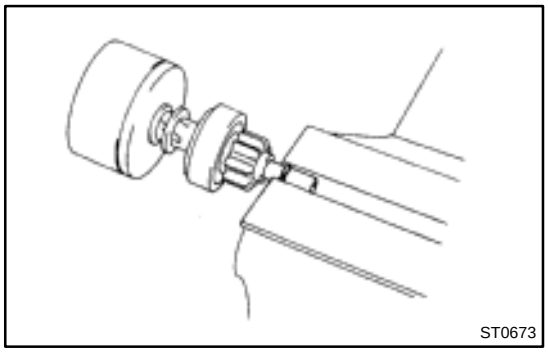

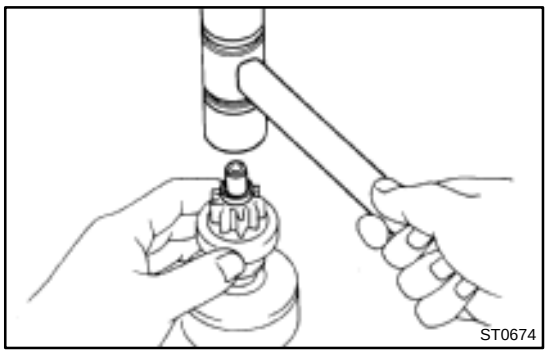

(e) Hold the starter clutch, tap the planet carrier shaft and install the stop collar onto the snap ring with a plastic–faced hammer.

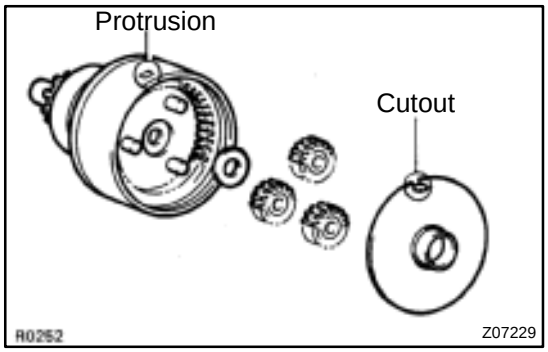

3. INSTALL PLANETARY GEARS

(a) Apply grease to the planetary gears and flange pin parts of the planet carrier shaft.
(b) Install the plate washer and 3 planetary gears.
(c) Align the cutout of the plate with the protrusion inside the shock absorber, and install the plate.

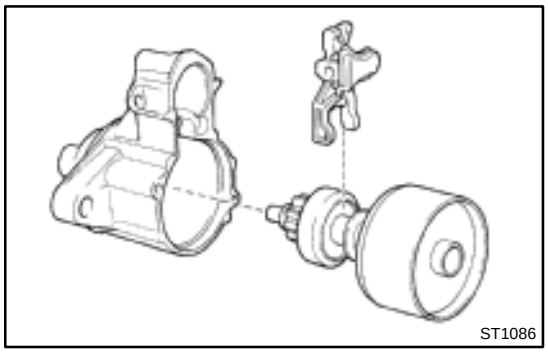

4. INSTALL DRIVE LEVER AND STARTER CLUTCH WITH SHOCK ABSORBER

(a) Apply turbine oil to the bearing of the starter drive housing.
(b) Apply grease to the drive lever touching the starter pivot part of the drive lever.
(c) Install the drive lever to the starter clutch.

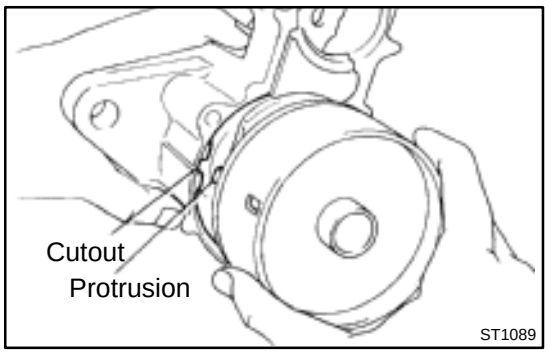

(d) Align the protrusion of the shock absorber with the cutout of the drive housing and install them.

5. PLACE ARMATURE INTO FIELD FRAME

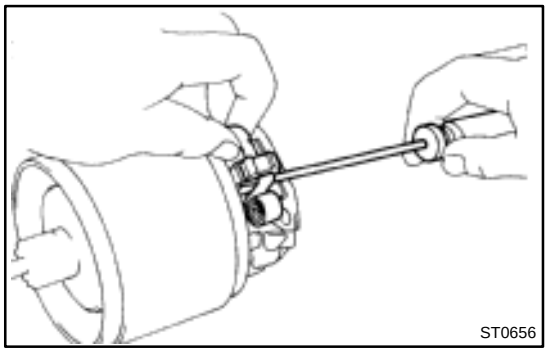

6. INSTALL BRUSH HOLDER

(a) Place the brush holder in position on the armature.
(b) Using a screwdriver, hold the brush spring back, and connect the brush into the brush holder. Connect the 4 brushes.

NOTICE:

Check that positive (+) lead wires are not grounded.

(c) Install a new O–ring to the groove of the field frame.
(d) Apply turbine oil to the bearing of the end cover.

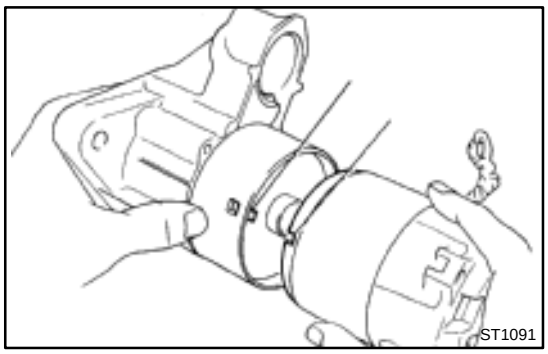

(e) Install the end cover to the field frame with 2 screws.
Torque: 1.5 N·m (15 kgf·cm, 13 in.·lbf)

7. INSTALL FIELD FRAME AND ARMATURE ASSEMBLY

(a) Install a new O–ring to the groove of the field frame.
(b) Align the cutout of the field frame with the protrusion of the shock absorber.
(c) Install the field frame and armature assembly with the 2 through bolts.
Torque: 5.9 N·m (60 kgf·cm, 52 in.·lbf)

8. INSTALL MAGNETIC SWITCH

(a) Install the plunger cover to the magnetic switch.
(b) Hang the plunger of the magnetic switch to the drive lever from the upper side.
(c) Install the magnetic switch with the 2 nuts.
Torque: 8.3 N·m (85 kgf·cm, 73 in.·lbf)
(d) Connect the lead wire to the terminal, and install the nut.
Torque: 9.8 N·m (100 kgf·cm, 87 in.·lbf)

ST081–01

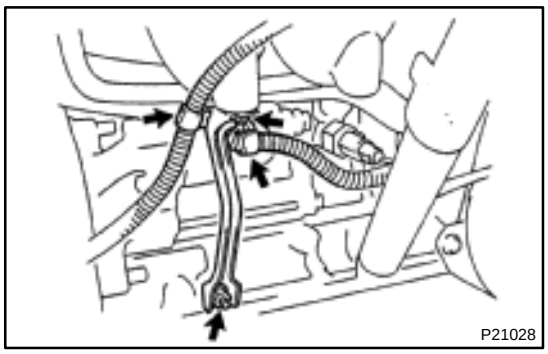

REMOVAL

1. REMOVE AIR CLEANER HOSE

2. REMOVE INTAKE MANIFOLD STAY

(a) Disconnect the engine wire clamps from intake manifold stay.

(b) Remove the bolt, nut and intake manifold stay.
Torque: 17.5 N·m (175 kgf·cm, 13 ft·lbf)

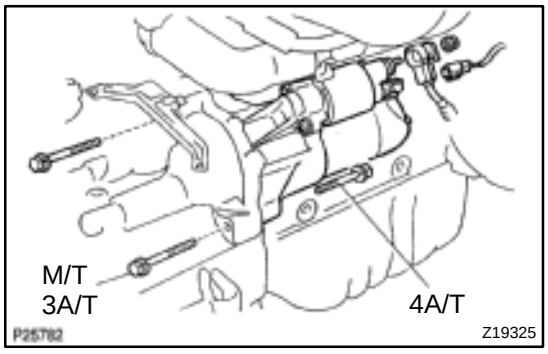

3. REMOVE STARTER

(a) Disconnect the starter connector.

(b) Remove the nut, and disconnect the starter wire.
Torque: 8.8 N·m (90 kgf·cm, 78 in.·lbf)

(c) Remove the 2 bolts, wire clamp and starter.
Torque: 37 N·m (370 kgf·cm, 27 ft·lbf)

ST084–01

REPLACEMENT

1. REPLACE BRUSHES

HINT:

Only the 2 brushes of the positive (+) side (york side) are exchangeable, negative (–) side brush must be changed in the body with the brush holder.

(a) Cut the brush lead wire at the terminal side.

(b) Shave welded mark of the brush lead wire with sandpaper etc., and correct the terminal to the specified.

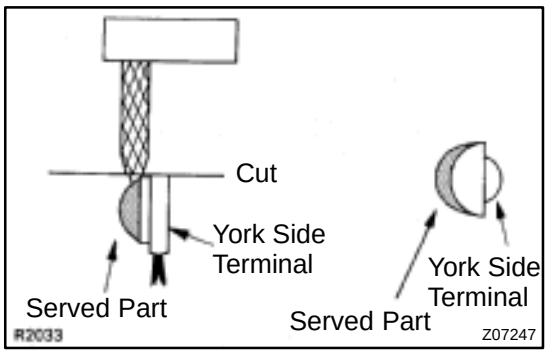

NOTICE:

Part to be shaved is so narrow that you should take care not to harm the field coil.

Specified width: 5.0 mm (0.197 in.)

Specified thickness: 1.6 mm (0.063 in.)

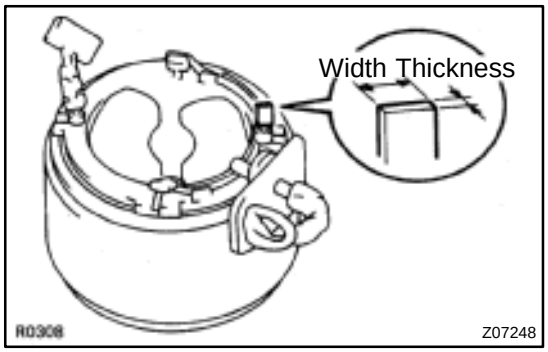

(c) Press the plate of the supply brush on the welded side of the terminal lead wire.

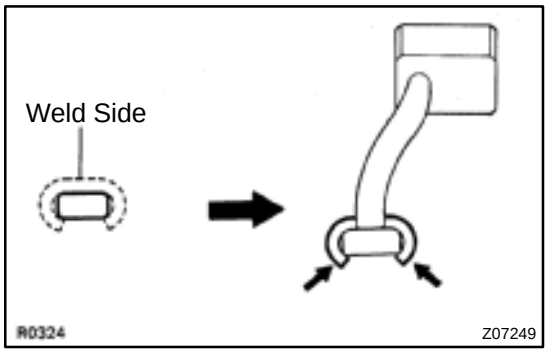

(d) Solder the pressed part, and shave to the specified measures with the sandpaper etc.

Specified width: 7.0 mm (0.276 in.)

Specified thickness: 3.3 mm (0.130 in.)

- Heat the soldered part well, and fiow the solder inside the plate, take care not to flow it into flow it into the inside lead wire.
- Take care not to flow the solder into field.

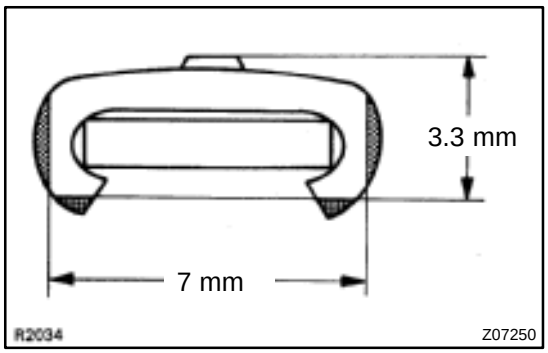

2. REPLACE CENTER BEARING

(a) Using SST and press, press out the center bearing.
SST 09221–25026 (09221–00090)

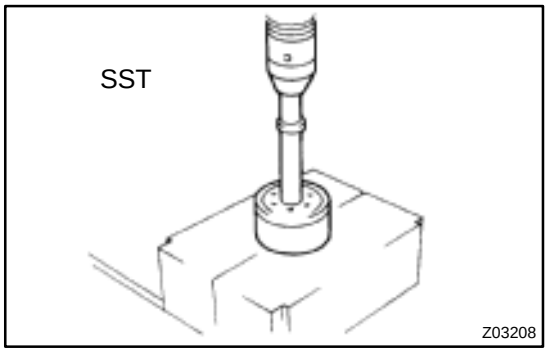

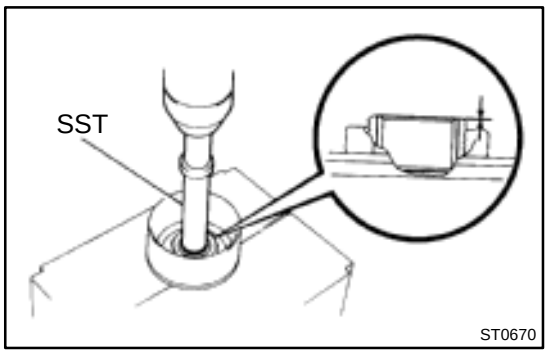

(b) Using SST and a press in a new center bearing to the position shown in the illustration.
SST 09221–25026 (09221–00090)

ST086–01

TEST

NOTICE:

These tests must be performed within 3 to 5 seconds to avoid burning out the coil.

1. DO PULL–IN TEST

(a) Disconnect the field coil lead from terminal C.

(b) Connect the battery to the magnetic switch as shown. Check that the clutch pinion gear moves outward.

If the clutch pinion gear does not move, replace the magnetic switch.

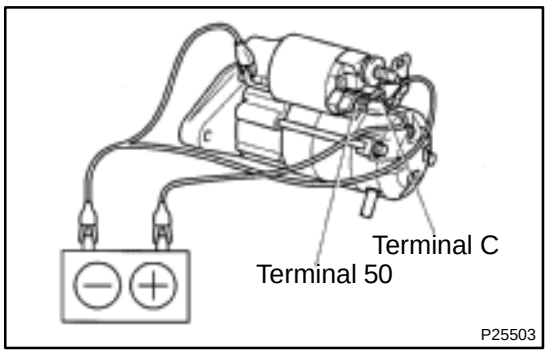

2. DO HOLD–IN TEST

While connected as above with the clutch pinion gear out, disconnect the negative (–) lead from terminal C. Check that the clutch pinion gear remains out.

If the clutch pinion gear returns inward, replace the magnetic switch.

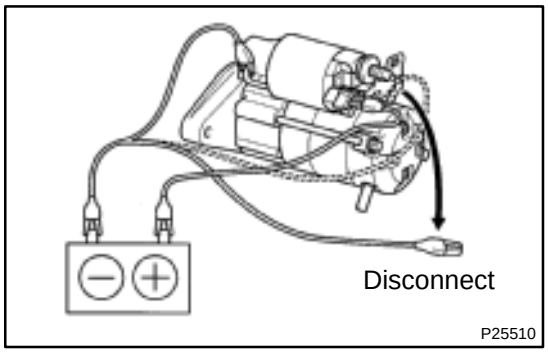

3. INSPECT CLUTCH PINION GEAR RETURN

Disconnect the negative (–) lead from the switch body. Check that the clutch pinion gear returns inward.

If the clutch pinion gear does not return, replace the magnetic switch.

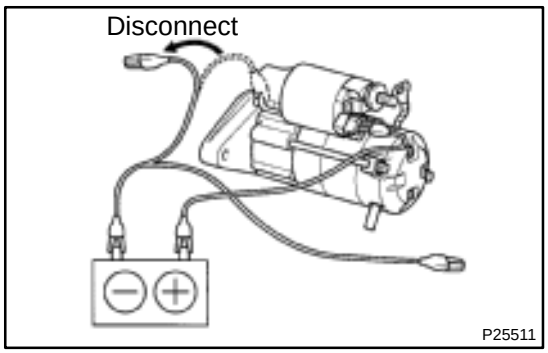

4. INSPECT CLUTCH PINION GEAR CLEARANCE

(a) Connect the battery to the magnetic switch as shown.

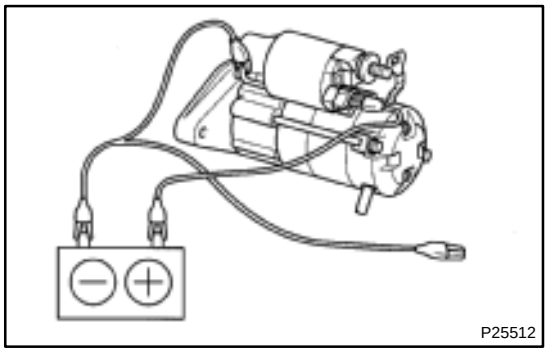

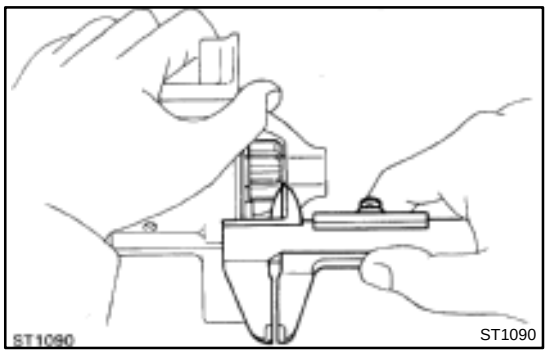

(b) Move the pinion gear toward the armature to remove slack and measure the clearance between the pinion gear end and stop collar.
Standard clearance: 1 – 5 mm (0.04 – 0.20 in.)

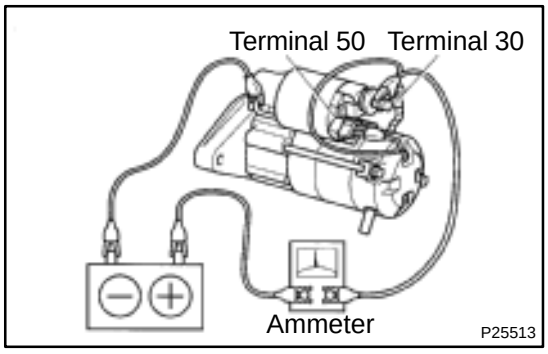

5. DO NO–LOAD PERFORMANCE TEST

(a) Connect the field coil lead to terminal C. Make sure the lead is not grounded.

(b) Connect the battery and ammeter to the starter as shown.

(c) Check that the starter rotates smoothly and steadily with the clutch pinion gear moving out. Check that the ammeter reads the specified current.
Specified current: At 11.5 V: 90 A or less

STARTER (Reduction Type)

ST0JD–01

COMPONENTS

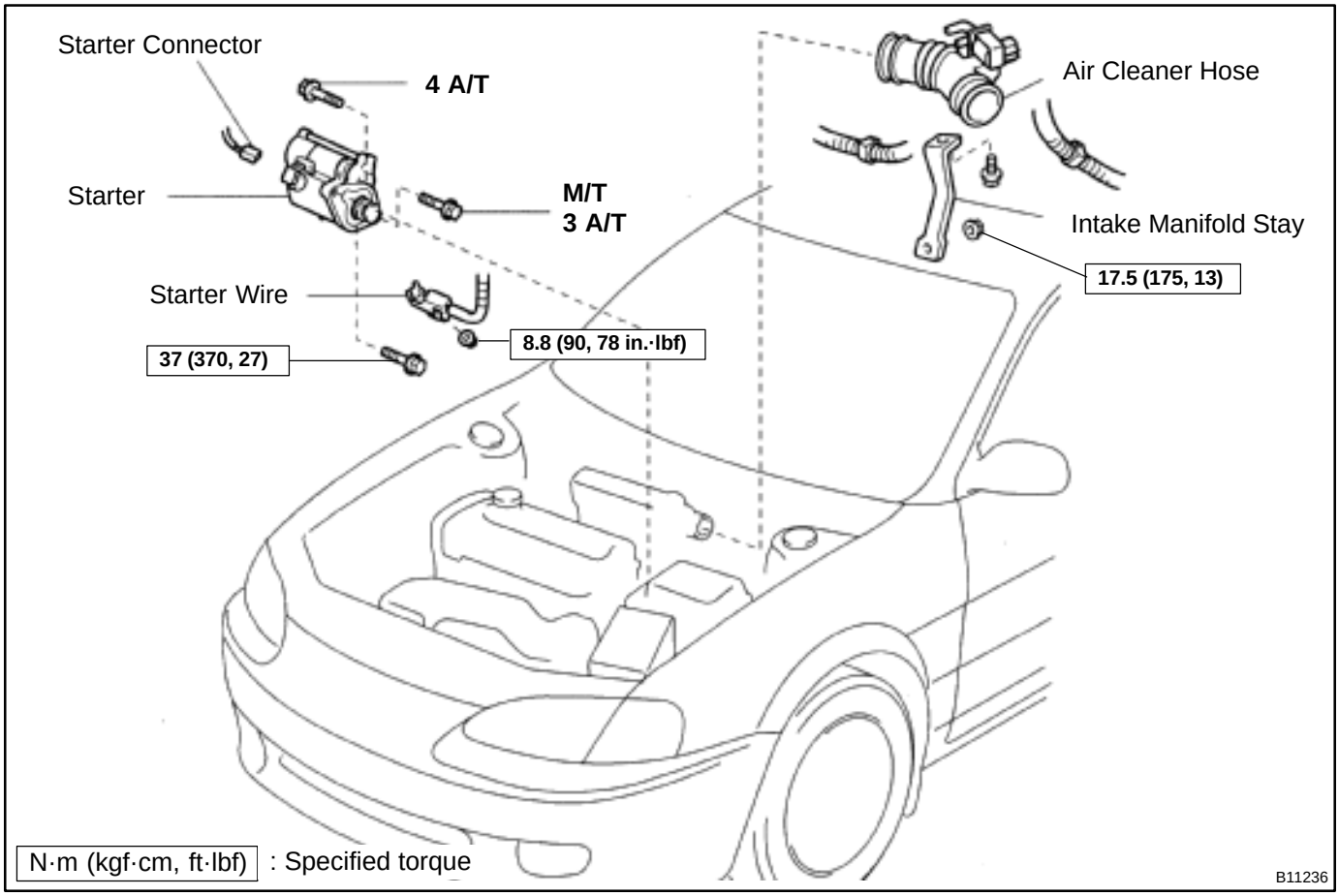

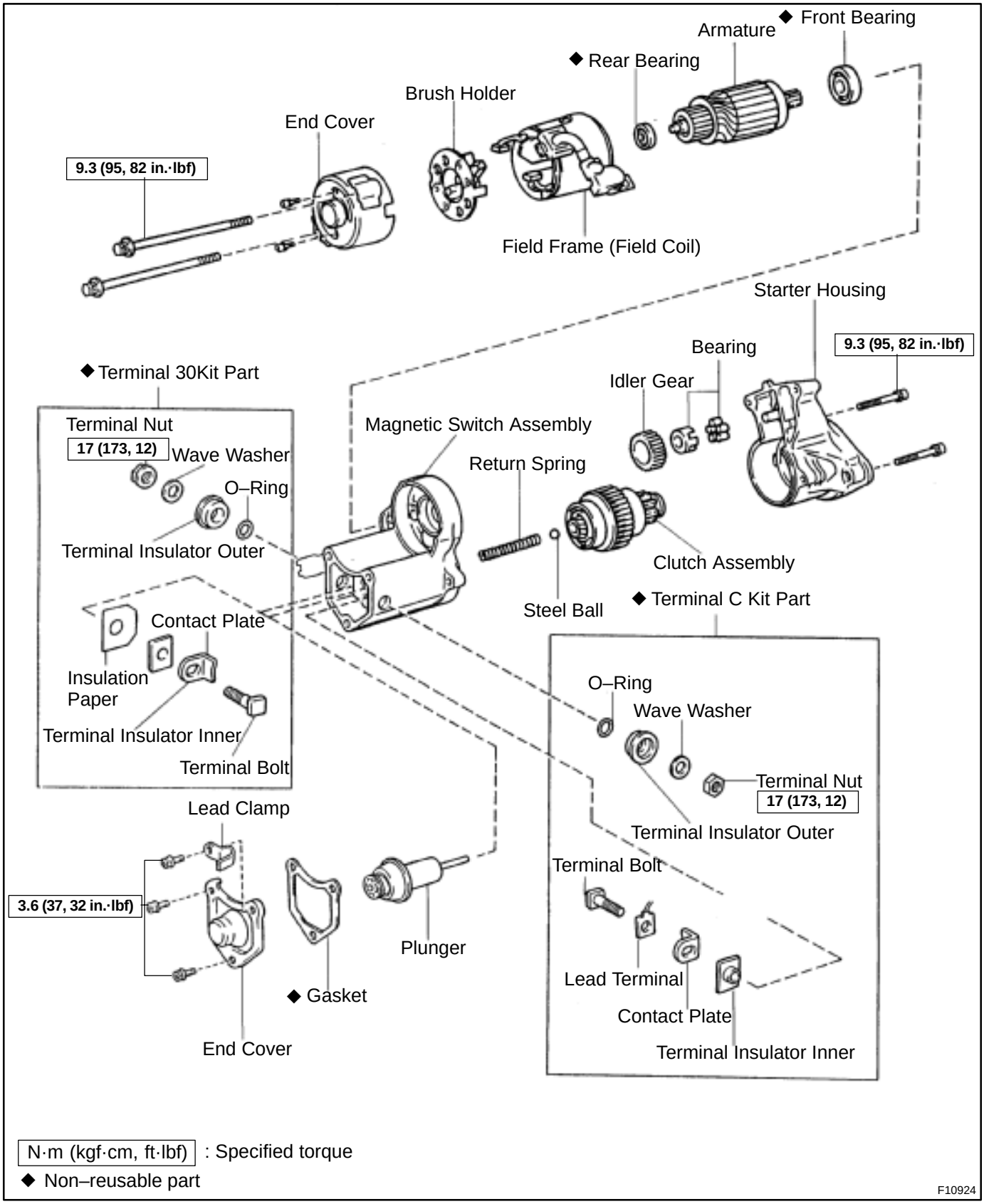
◆ Front Bearing
Armature
◆ Rear Bearing
Brush Holder
End Cover
9.3 (95, 82 in.·lbf)
Field Frame (Field Coil)
Starter Housing
9.3 (95, 82 in.·lbf)
Bearing
Idler Gear
◆ Terminal 30Kit Part
Terminal Nut
17 (173, 12)
Wave Washer
O–Ring
Terminal Insulator Outer
Magnetic Switch Assembly
Return Spring
Clutch Assembly
Steel Ball
◆ Terminal C Kit Part
Contact Plate
Insulation Paper
Terminal Insulator Inner
Terminal Bolt
O–Ring
Wave Washer
Terminal Nut
17 (173, 12)
Terminal Insulator Outer
Terminal Bolt
Lead Clamp
3.6 (37, 32 in.·lbf)
Plunger
Lead Terminal
Contact Plate
Terminal Insulator Inner
◆ Gasket
End Cover
N·m (kgf·cm, ft·lbf) : Specified torque
◆ Non–reusable part
F10924

ST0JF–01

DISASSEMBLY

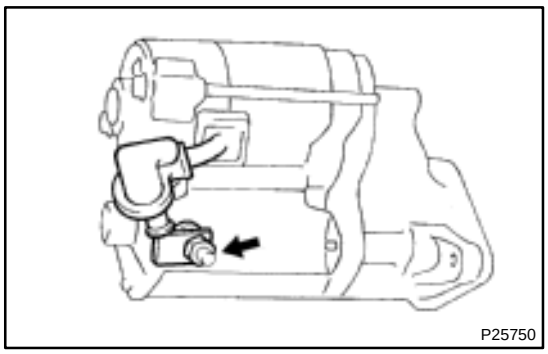

1. REMOVE FIELD FRAME AND ARMATURE

(a) Remove the nut, and disconnect the lead wire from the magnetic switch terminal.
Torque: 5.9 N·m (60 kgf·cm, 52 in.·lbf)

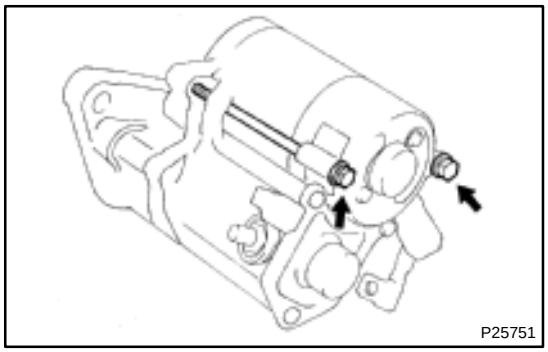

(b) Remove the 2 through bolts.
Torque: 9.3 N·m (95 kgf·cm, 82 in.·lbf)

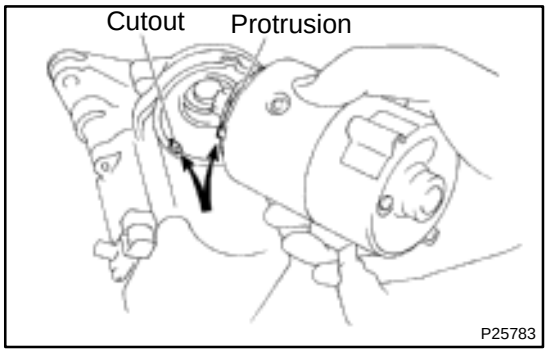

(c) Pull out the field frame together with the armature.

HINT:

At the time of reassembly, please refer to the following item.
Align the protrusion of the field frame with the grove of the magnetic switch.

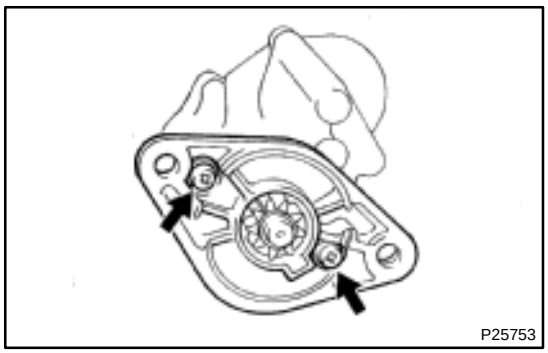

2. REMOVE STARTER HOUSING, CLUTCH ASSEMBLY AND GEAR

(a) Remove the 2 screws.
Torque: 9.3 N·m (95 kgf·cm, 82 in.·lbf)

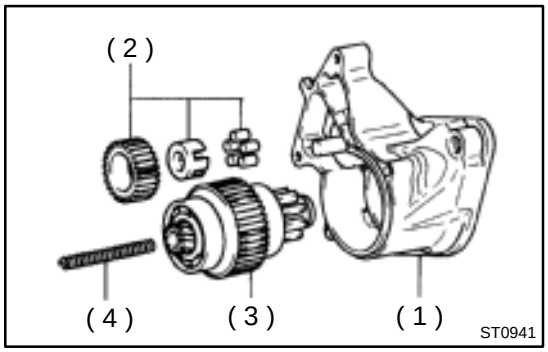

(b) Remove these parts from the magnetic switch:
(1) Starter housing
(2) Idler gear and bearing
(3) Clutch assembly
(4) Return spring

HINT:

Insert the return spring in to the magnetic switch hole.

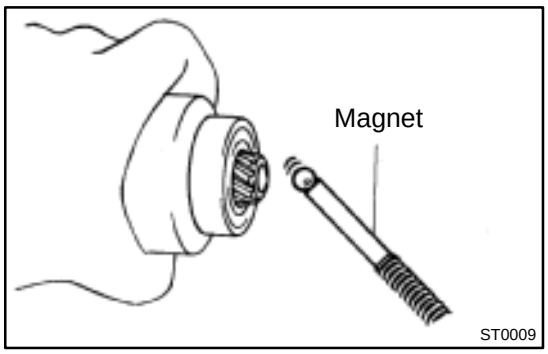

3. REMOVE STEEL BALL

Using a magnetic finger, remove the steel ball from the clutch shaft hole.

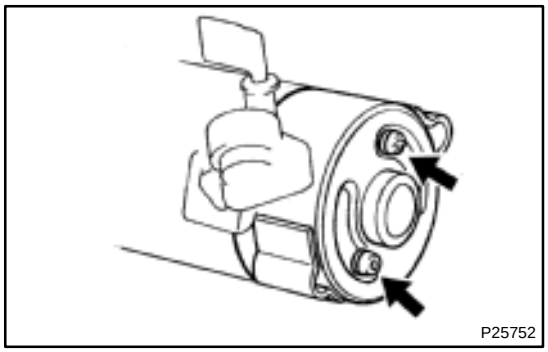

4. REMOVE BRUSHES AND BRUSH HOLDER

(a) Remove the 2 screws and end cover from the field frame.

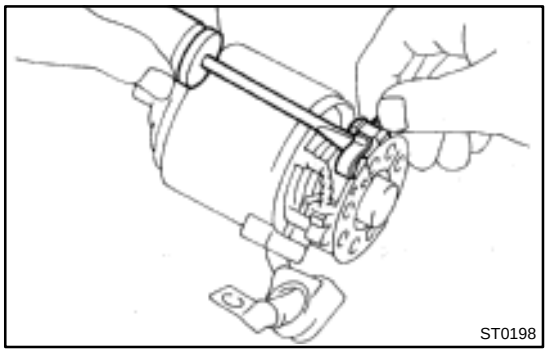

(b) Using a screwdriver, hold the spring back and disconnect the brush from the brush holder. Disconnect the 4 brushes, and remove the brush holder.

NOTICE:

check that the positive (+) lead wire are not grounded.

5. REMOVE ARMATURE FROM FIELD FRAME

ST0JG–01

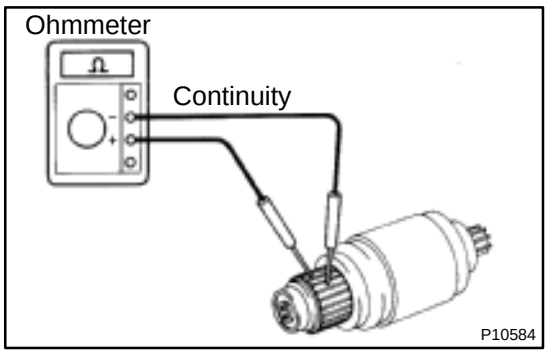

INSPECTION

1. INSPECT ARMATURE COIL

(a) Check the commutator for open circuit.
Using an ohmmeter, check that there is continuity between the segments of the commutator.

If there is no continuity between any segment, replace the armature.

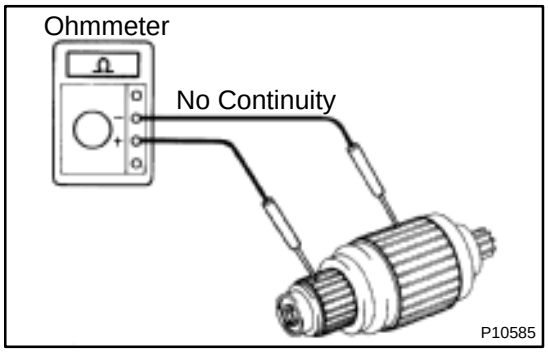

(b) Check the commutator for ground.
Using an ohmmeter, check that there is no continuity between the commutator and armature coil core.

If there is continuity, replace the armature.

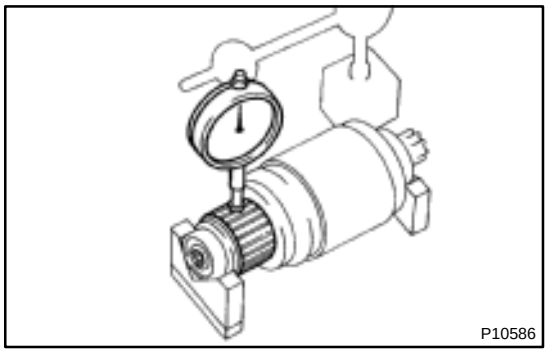

(c) Check for the commutator circle runout.

If the surface is dirty or burnt, correct it with sandpaper (No.400) or on a lathe.

(1) Place the commutator on V–blocks.
(2) Using a dial gauge, measure the circle runout.
Maximum circle runout:
0.05 mm (0.0020 in.)

If the circle runout is greater than maximum, correct it on a lathe.

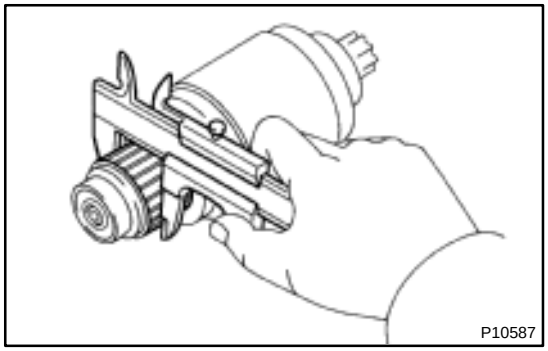

(d) Using a vernier caliper, measure the commutator diameter.
Standard diameter:
30.0 mm (1.181 in.)
Minimum diameter:
29.0 mm (1.142 in.)

If the diameter is less than minimum, replace the armature.armature.

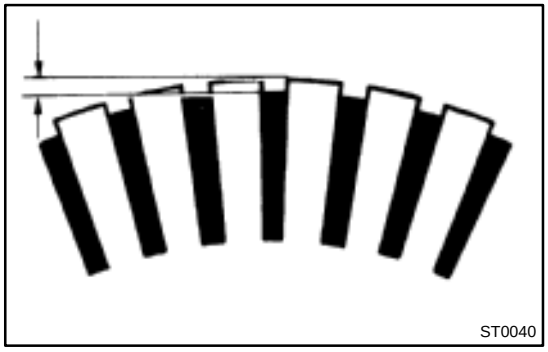

(e) Check that the undercut depth is clean and free of foreign materials. Smooth out the edge.
Standard undercut depth: 0.6 mm (0.024 in.)
Minimum undercut depth: 0.2 mm (0.008 in.)

If the undercut depth is less than minimum, correct it with a hacksaw blade.

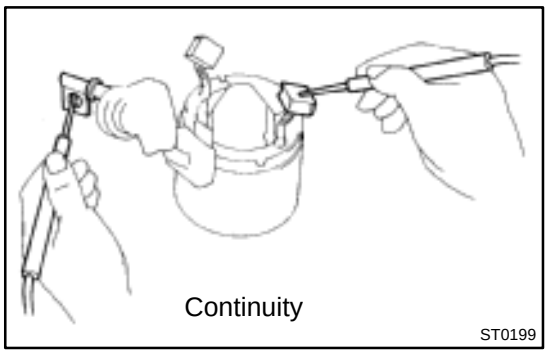

2. INSPECT FIELD COIL

(a) Check the field coil for open circuit.
Using an ohmmeter, check that there is no continuity between the field coil end and field frame.

If there is continuity, replace the field frame.

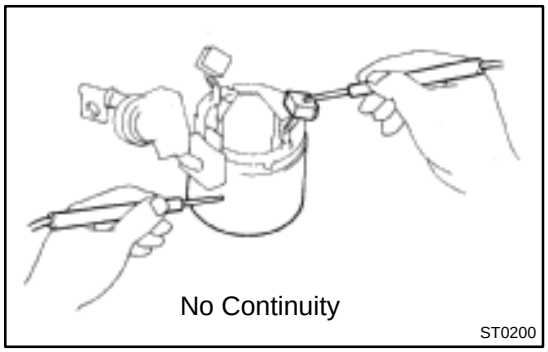

(b) Check the field coil for ground.
Using an ohmmeter, check that there is continuity between the lead wire and field coil brush lead.

If there is no continuity, replace the field frame.

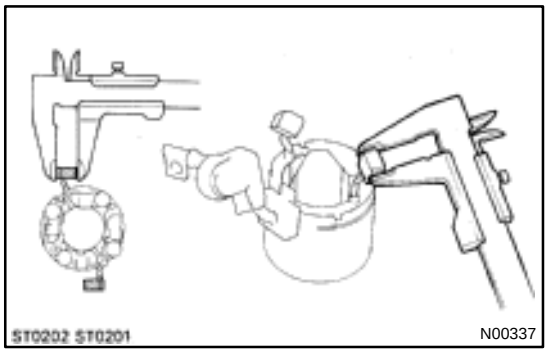

3. INSPECT BRUSHES

Using a vernier caliper, measure the brush length.

Standard length: 13.5 mm (0.531 in.)
Minimum length: 8.5 mm (0.335 in.)

If the length is less than minimum, replace the brush holder and field frame.

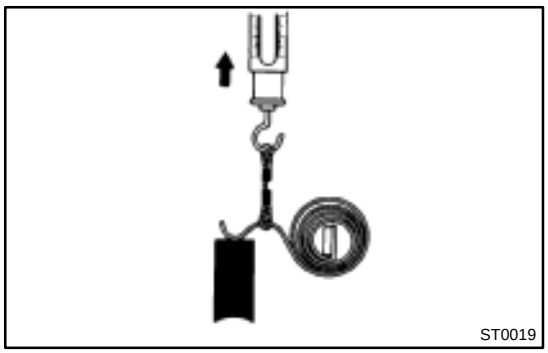

4. INSPECT BRUSH SPRING LOAD

Take the pull scale reading the instant the brush spring separates from the brush.

Standard spring installed load:
17.6 – 23.5 N (1.79 – 2.41 kgf, 3.9 – 5.3 lbf)
Minimum spring installed load:
11.8 N (1.2 kgf, 2.6 lbf)

If the installed load is not as specified, replace the brush springs.

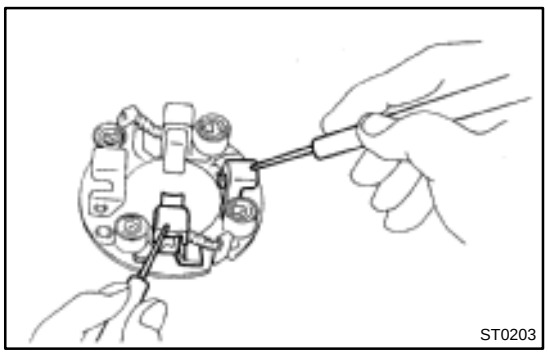

5. INSPECT BRUSH HOLDER

Check the brush holder insulation.

Using an ohmmeter, check that there is no continuity between the positive (+) and negative (–) brush holders.

If there is continuity, repair or replace the brush holder.

6. INSPECT CLUTCH AND GEAR

(a) Check the gear teeth on the pinion gear, idle gear and the clutch assembly for wear or damage.

If damaged, replace the gear or clutch assembly.

If damaged, also check the drive plate ring gear for wear or damage.

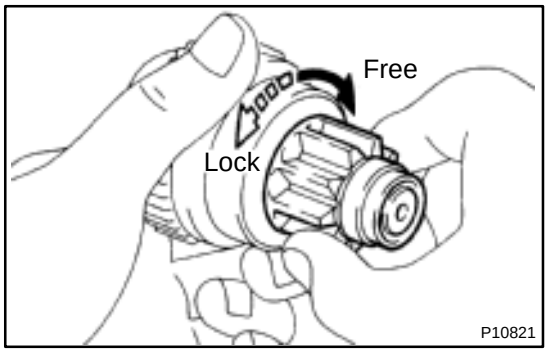

(b) Check the starter clutch.

Rotate the pinion gear clockwise, and check that it turns freely. Try to rotate the pinion gear counterclockwise and check that it locks.

If necessary, replace the clutch assembly.

7. INSPECT REAR BEARING

Turn each bearing by hand while applying inward force.

If resistance is felt or the bearing sticks, replace the bearing.

8. INSPECT FRONT BEARING

Turn each bearing by hand while applying inward force.

If resistance is felt or the bearing sticks, replace the bearing.

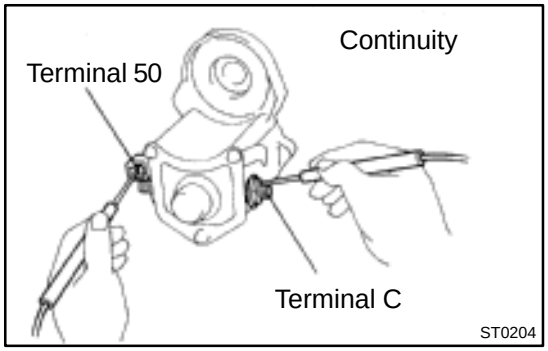

9. INSPECT MAGNETIC SWITCH

(a) Check the pull–in coil for open circuit.

Using an ohmmeter, check that there is continuity between terminals 50 and C.

If there is no continuity, check and replace the magnetic switch.

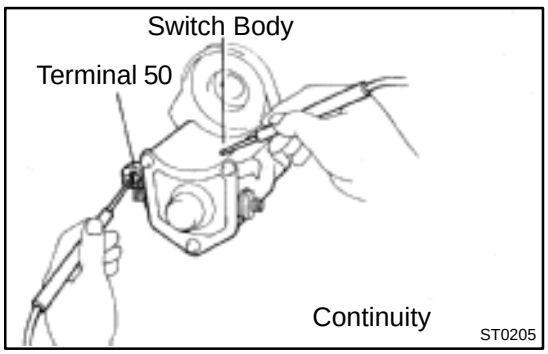

(b) Check the hold–in coil for open circuit.

Using an ohmmeter, check that there is continuity between terminal 50 and the switch body.

If there is no continuity, check and replace the magnetic switch.

ST0JK–01

INSTALLATION

Installation is in the reverse order of removal (See page ST–4).

ST0JI–01

REASSEMBLY

Reassembly is in the reverse order of disassembly (See Page ST–5).

HINT:

Use high–temperature grease to lubricate the bearings, gears, return spring and steel ball when assembling the starter.

ST0JE–01

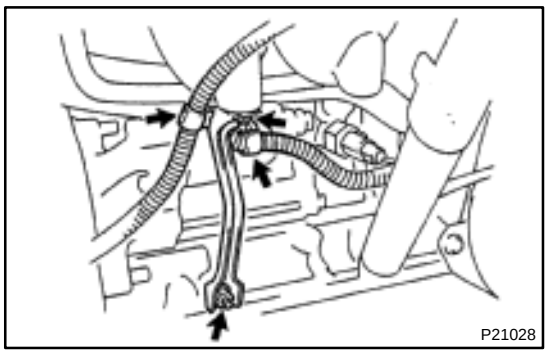

REMOVAL

1. REMOVE AIR CLEANER HOSE

2. REMOVE INTAKE MANIFOLD STAY

(a) Disconnect the engine wire clamps from intake manifold stay.

(b) Remove the bolt, nut and intake manifold stay.
Torque: 17.5 N·m (175 kgf·cm, 13 ft·lbf)

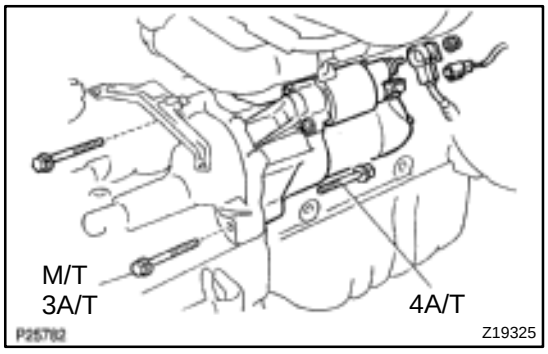

3. REMOVE STARTER

(a) Disconnect the starter connector.

(b) Remove the nut, and disconnect the starter wire.
Torque: 8.8 N·m (90 kgf·cm, 78 in.·lbf)

(c) Remove the 2 bolts, wire clamp and starter.
Torque: 37 N·m (370 kgf·cm, 27 ft·lbf)

ST0JH–01

REPLACEMENT

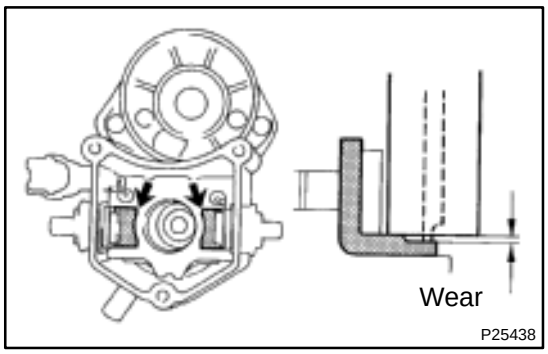

1. REMOVE MAGNETIC SWITCH END COVER

Remove the 3 bolts, lead clamp, end cover, gasket and plunger.

2. INSPECT CONTACT PLATE FOR WEAR

Using vernier calipers, measure the contact plate for depth of wear.

Maximum wear: 0.9 mm (0.035 in.)

If the depth of wear is greater than the maximum, replace the contact plate.

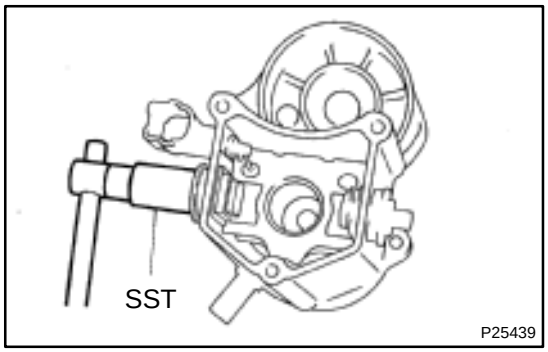

3. REMOVE TERMINAL KIT PARTS

(a) Using SST, loosen the terminal nuts.
SST 09810–38140

(b) Terminal C:
Remove the terminal nut, wave washer, terminal insulator (outside), O–ring, terminal bolt, contact plate and terminal insulator (inside).

(c) Terminal 30:
Remove the terminal nut, wave washer, terminal insulator (outside), O–ring, terminal bolt, contact plate, terminal insulator (inside) and insulation paper.

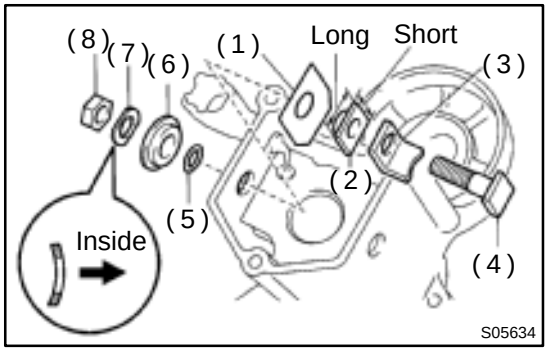

4. REINSTALL TERMINAL KIT PARTS

(a) Install these new parts:
Terminal 30:
(1) Insulation paper
(2) Terminal insulator (inside)
(3) Contact plate
(4) Terminal bolt
(5) O–ring
(6) Terminal insulator (outside)
(7) Wave washer
(8) Terminal nut

NOTICE:

Be careful to install the terminal insulators (inside) and wave washer in the correct direction.

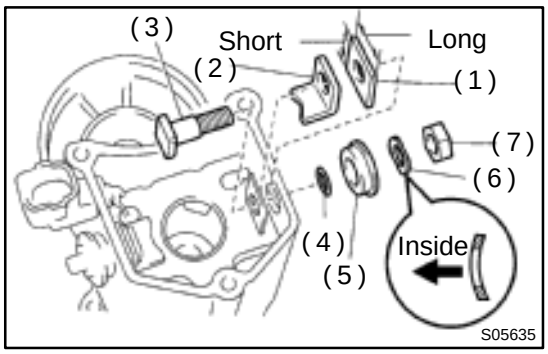

Terminal C:

(1) Terminal insulator (inside)
(2) Contact plate
(3) Terminal bolt
(4) O–ring
(5) Terminal insulator (outside)
(6) Wave washer
(7) Terminal nut

NOTICE:

Be careful to install the terminal insulators (inside) and wave washer in the correct direction.

(b) Temporarily tighten the terminal nuts.

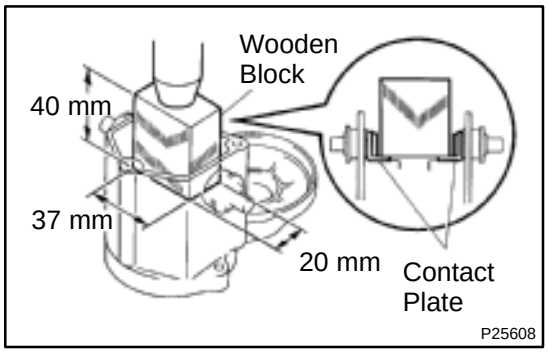

5. TIGHTEN TERMINAL NUT

(a) Put a wood block on the contact plate and press it down with a hand press.

Dimensions of wood block:
20 x 37 x 40 mm (0.97 x 1.46 x 1.57 in.)
Press force:
981 N (100 kgf, 221 lbf)

NOTICE:

- **Check the diameter of the hand press ram. Then calculate the gauge pressure of the press when 981 N (100 kgf, 221 lbf) of force is applied.**

Gauge Pressure

$$(kgf/cm^2) = \frac{100\ kgf}{\left(\frac{\text{Ram diameter (cm)}}{2}\right)^2 \times 3.14\ (\pi)}$$

$$(psi) = \frac{221\ lbf}{\left(\frac{\text{Ram diameter (in.)}}{2}\right)^2 \times 3.14\ (\pi)}$$

$$(kPa) = (kgf/cm^2) \times 98.1$$

$$(kPa) = (psi) \times 6.9$$

V06796

- **If the contact plate is not pressed down with the specified pressure, the contact plate may tilt due to coil deformation or the tightening of the nut.**

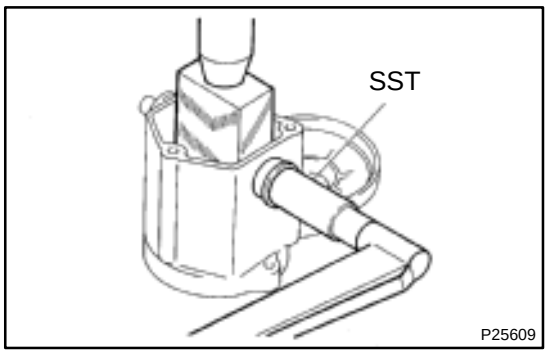

(b) Using SST, tighten the nuts to the specified torque.
SST 09810–38140
Torque: 17 N·m (173 kgf·cm, 12 ft·lbf)

NOTICE:
If the nut is over tightened, it may cause cracks on the inside of the insulator.

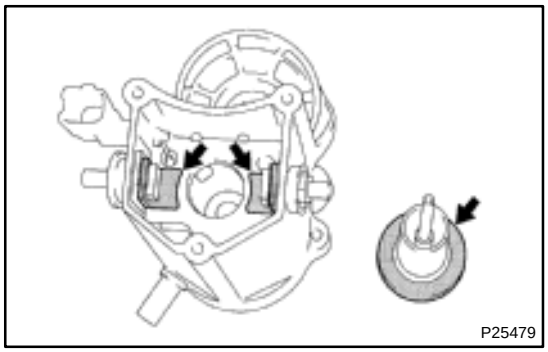

6. CLEAN CONTACT SURFACES OF CONTACT PLATE AND PLUNGER

Clean the contact surfaces of the remaining contact plate and plunger with a dry shop rag.

7. REINSTALL MAGNETIC SWITCH END COVER

Install the plunger, new gasket, end cover and lead clamp with 3 bolts.

Torque: 3.6 N·m (37 kgf·cm, 32 in.·lbf)

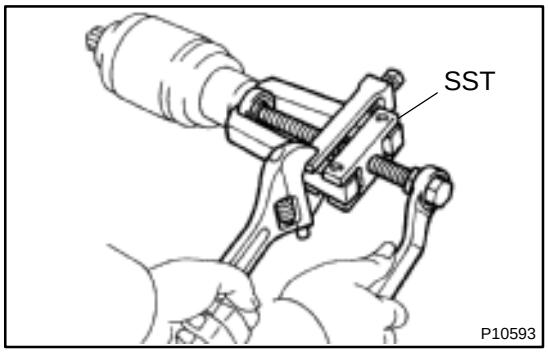

8. REPLACE REAR BEARING

(a) Using SST, remove the bearing.
SST 09286–46011

(b) Using a press, press in a new rear bearing.

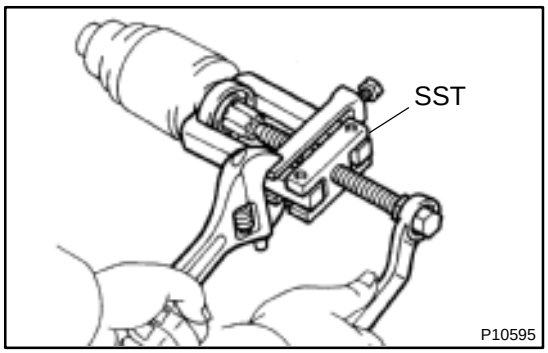

9. REPLACE FRONT BEARING

(a) Using SST, remove the bearing.
SST 09286–46011

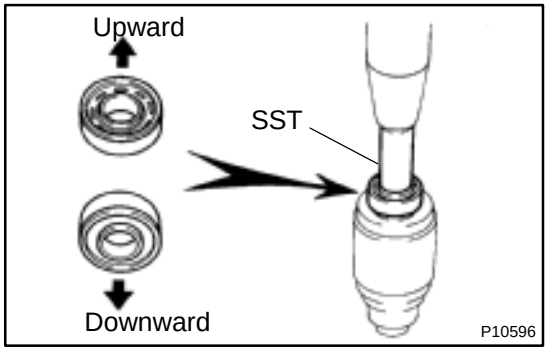

(b) Using SST and a press, press in a new bearing.

NOTICE:
Be careful of the bearing installation direction.

SST 09820–00030

ST0JJ–01

TEST

NOTICE:

These tests must be performed within 3 to 5 seconds to avoid burning out the coil.

1. DO PULL–IN TEST

(a) Disconnect the field coil lead wire from terminal C.

(b) Connect the battery to the magnetic switch as shown. Check that the clutch pinion gear moves outward.

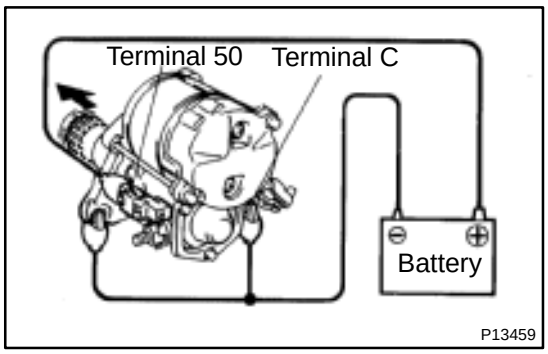

2. DO HOLD–IN TEST

With battery connected as above with the clutch pinion gear out, disconnect the negative (–) lead from terminal C. Check that the pinion gear remains out.

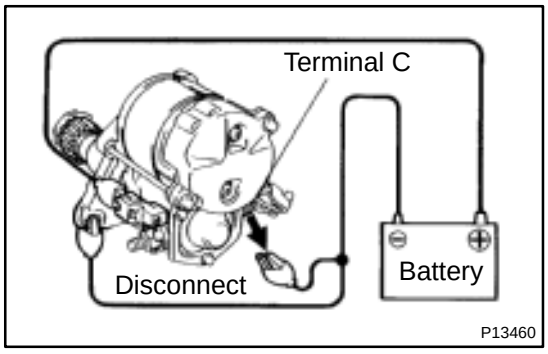

3. INSPECT CLUTCH PINION GEAR RETURN

Disconnect the negative (–) lead from the switch body. Check that the clutch pinion gear returns inward.

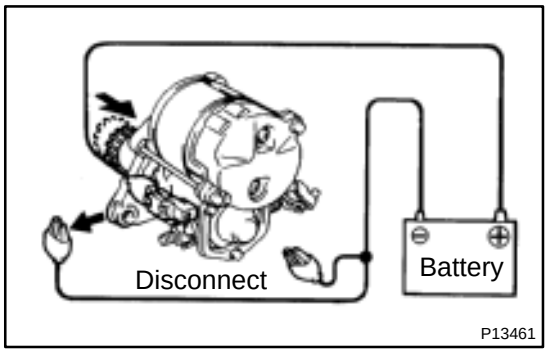

4. DO NO–LOAD PERFORMANCE TEST

(a) Connect the battery and ammeter to the starter as shown.

(b) Check that the starter rotates smoothly and steadily with the pinion gear moving out. Check that the ammeter the current specified in the respective repair manual.

Specified current:

At 11.5 V: 90 A or less

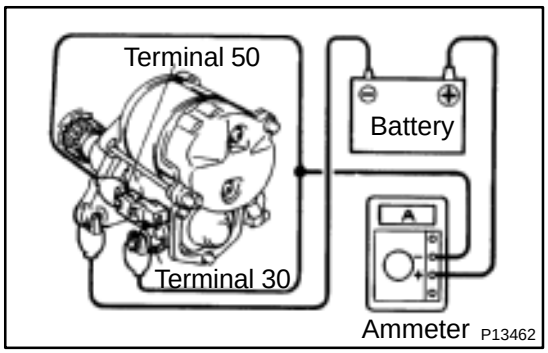

STARTING SYSTEM

ST07Z–01

ON–VEHICLE INSPECTION

NOTICE:

Before changing the starter, check the following items again:

- **Connector connection**
- **Accessory installation, e.g.: theft deterrent system**